PARTS CATALOG

MODEL 410 SERIES

NISSAN MOTOR CO., LTD.

7,6-CHOME, GINZA-HIGASHI, CHUO-KU,
TOKYO, JAPAN
Cable Address : "NISMO" TOKYO
Telex : "NISMO" TK2503
Phones : (543) 5523

Pub. No. C-052E

INTRODUCTION

INTRODUCTION

INTRODUCTION

To bring better customer service and better spare parts supply, please note the following four points when refering to this Parts Catalog.

I. HOW TO USE THIS PARTS CATALOG

A. The Publication Number of this Parts Catalog C-052E. Whenever quoting the Parts Catalog, tell us this Pub. No..

B. All spare parts available for MODEL 410 series are included here.

C. Spare parts are compiled in order of their functional section index which appears on page 19.

D. Brief specifications of Model 410 series appear on page 3.

E. Symbols and Abbreviations appear on page 6.

F. Part Number Index is attached to the end of this Parts Catalog.

II. HOW TO PLACE YOUR ORDERS FROM THE PARTS CATALOG (FOR DISTRIBUTOR USE ONLY)

A. Typewrite the spare parts which you are going to order on the given Nissan Spare Parts Order Sheet.

B. At least the Part Numbers and the Quantity must be filled in as accurately as possible. Otherwise our computer may reject your order.

C. In the case that you can not find the Part No. which you are going to order we shall be very glad to take care of this problem after verifying its availability. Therefore, place your order on another order sheet as a conditional order, which does not include a Ordinary order, telling us precisely the Part Name, the Place where it is attached and the Quantity if it is a colored thing or material, attach a sample.

III. HOW TO COMPARE THE CONFIRMATION LIST AND THE PARTS CATALOG (FOR DISTRIBUTOR USE ONLY)

Although all parts contained here are in principle available for supply, if you find some parts shown in the Parts Catalog sorted F/# 5 on the confirmation list where the availability of your ordered parts are classified by our computer in respect to our stock control system, kindly tell us the Parts Numbers, the Pub. No. of the Parts Catalog (C-052E), and the Page. We shall be glad to inform you of the availability by the revised confirmation list as soon as possible.

IV. HOW TO ADAPT TO OUR PART NUMBER SYSTEM

In our parts supply system, the Part Number plays a key role. Therefore, you may print only the part numbers and the quantity as long as they do not cause mutual misunderstandings.

For this reason, kindly become familiar with our Part Number System which appears on page 10.

BRIEF SPECIFICATION

ITEM \ MODEL	P(L)410-U	WP(L)410-U	(W)P(L)410-UT
CAR DIMENSIONS			
Overall length mm (in)	3,995 (157.4)	3,995 (157.4)	3,995 (157.4)
Overall width mm (in)	1,490 (58.7)	1,490 (58.7)	1,490 (58.7)
Overall height mm (in)	1,390 (54.8)	1,426 (56.2)	1,430 (56.3)
Wheel base mm (in)	2,380 (93.8)	2,380 (93.8)	2,380 (93.8)
Tread-front mm (in)	1,206 (47.5)	1,206 (47.5)	1,206 (47.5)
Tread-rear mm (in)	1,198 (47.2)	1,198 (47.2)	1,198 (47.2)
Road clearance mm (in)	175 (6.9)	175 (6.9)	175 (6.9)
CAR WEIGHT			
Car weight kg (lb)	885 (1,947)	960 (2,112)	960 (2,112)
Seat	5	5	5
Total car weight kg (lb)	1,160 (2,552)	1,235 (2,717)	1,235 (2,717)
PERFORMANCES			
Maximum speed km/h	128 (80 MPH)	128 (80 MPH)	135 (85 MPH)
Fuel consumption (km/ℓ)	18	18	18
Grade ability (sin θ)	0.34	0.34	0.36
Minimum turning radius m (ft)	5.0 (16)	5.0 (16)	5.0 (16)
ENGINE			
Type	E-1	E-1	E-1
Sort	Gasoline engine	Gasoline engine	Gasoline engine
Cylinder arrangement	4-in line	4-in line	4-in line
Cycle	4	4	4
Valve arrangement	Over head	Over head	Over head
Bore × stroke mm (in)	73 × 71 (2.88 × 2.80)	73 × 71 (2.88 × 2.80)	73 × 71 (2.88 × 2.80)
Piston total displacement cc (in)	1.189 (72.5)	1.189 (72.5)	1.189 (72.5)
Compression ratio	8.2	8.2	8.2
Maximum power (HP/rpm) (SAE)	60/5,000	60/5,000	60/5,000
Maximum torque kg-m/rpm (ft-lb)	9.3/3,600 (67.3)	9.3/3,600 (67.3)	9.3/3,600 (67.3)
Length × width × height mm (in)	589 × 582 × 690 (23.2 × 22.9 × 27.2)	589 × 582 × 690 (23.2 × 22.9 × 27.2)	589 × 582 × 690 (23.2 × 22.9 × 27.2)
Total engine weight kg (lb)	138 (304)	138 (304)	138 (304)

EXPLANATION OF EACH COLUMN

I. "S" column (preciding the KEY NO. column.)
DISTRIBUTOR USE ONLY

*..... Signifies that the part No. has been removed. In such a case, use the superseding part Nos. shown below.

..... The parts preceded by # mark are conditional order items place the order as specified in the Nissan Parts S.O.P..

II. KEY NO. column
..... A KEY NO. consists of three digits.
The key Nos. will be changed at each revision.

III. PART NO. column
..... They are as a rule ten digits.
However, 12-digit Part Nos. may rarely appear.

IV. PART NAME column
..... PART NAME column contains not only the part name but applied Car No. or Engine No. "INC" is the abbreviation of "Including".

V. Q'TY column
..... The quantity in this column shows the pieces of the part used in the section. "AR" is the abbreviation of "As Required".

VI. SALES UNIT column **(DISTRIBUTOR USE ONLY)**
..... SALES UNIT column indicates the pieces which are contained in a packing box (i.e. bulk unit).
Accordingly, if you place the order for a part multipling its sales unit, you will receive the part in a form easily to be stored into the bin (ex. Sales unit 10 ..... make your order by 19, 20, 30).
The Sales Units which are not filled-in will be advised you through the Revised Sheets.

VII. SYMBOLS AND ABBREVIATIONS IN THE APPLIED MODEL
The symbols and the abbreviations used in the applied model column are as follows. These symbols are taken by each model type, equipment (i.e. Super and Deluxe), the position of steering wheel, the transmission system, the displacement of the engine, sedan and the destinations.
..... The details of the group symbols which contain some group of the model types are shown on page 7.

VIII. "ICA" column

"ICA" is the abbreviation of Interchangeability.
"Y" is the abbreviation of Yes (i.e. Interchangeable).
"N" is the abbreviation of No (i.e. Non-interchangeable).
"C" is the abbreviation of Conditional (i.e. Interchangeable with condition).

In the case of "C" the details of the condition are described by the Figure.
The only modified parts carry this column.
These codes always show the relation between the part itself and the former part shown above.

SYMBOL AND ABBREVIATION

SYMBOL	MODEL	EXPLANATION	FINAL GEAR RATIO
U 410	P 410-U	RIGHT HAND DRIVE 410 SEDAN 3 SPEED	4.375
UN 410	P 410-UN	RIGHT HAND DRIVE 410 SEDAN 3 SPEED WITH AUTO CLUTCH	4.375
L 410	PL 410	LEFT HAND DRIVE 410 SEDAN 3 SPEED	4.625
LN 410	PL 410-N	LEFT HAND DRIVE 410 SEDAN 3 SPEED WITH AUTO CLUTCH	4.625
LU 410	PL 410-U	LEFT HAND DRIVE 410 SEDAN 3 SPEED	4.375
LUN 410	PL 410-UN	LEFT HAND DRIVE 410 SEDAN 3 SPEED WITH AUTO CLUTCH	4.375
UT 410	P 410-UT	RIGHT HAND DRIVE 410 SEDAN 4 SPEED	4.111
LUT 410	PL 410-UT	LEFT HAND DRIVE 410 SEDAN 4 SPEED	4.111
WU 410	WP 410-U	RIGHT HAND DRIVE 410 WAGON 3 SPEED	4.375
WUN 410	WP 410-UN	RIGHT HAND DRIVE 410 WAGON 3 SPEED WITH AUTO CLUTCH	4.375
WL 410	WPL 410	LEFT HAND DRIVE 410 WAGON 3 SPEED	4.625
WLN 410	WPL 410-UN	LEFT HAND DRIVE 410 WAGON 3 SPEED WITH AUTO CLUTCH	4.375
WLU 410	WPL 410-U	LEFT HAND DRIVE 410 WAGON 3 SPEED	4.375
WLUN 410	WPL 410-UN	LEFT HAND DRIVE 410 WAGON 3 SPEED WITH AUTO CLUTCH	4.375
WUT 410	WP 410-UT	RIGHT HAND DRIVE 410 WAGON 4 SPEED	4.111
WLUT 410	WPL 410-UT	LEFT HAND DRIVE 410 WAGON 4 SPEED	4.111

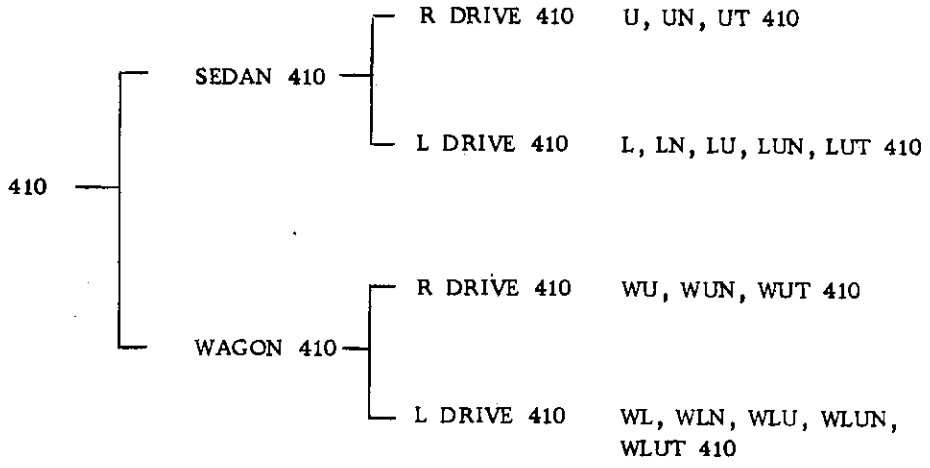

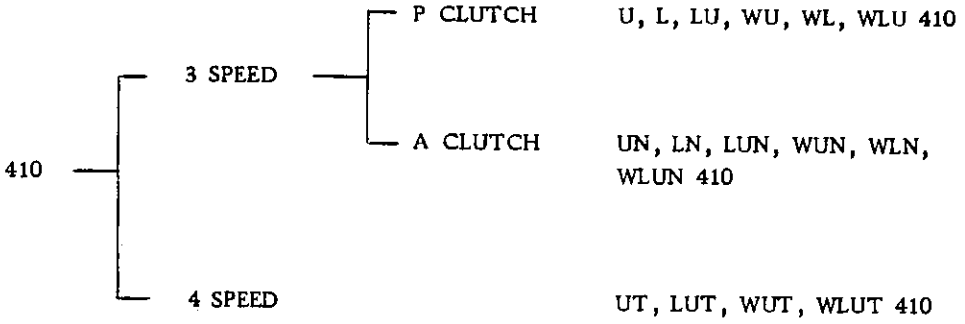

GROUP SYMBOLS

410	The part is used on all types of DATSUN SEDAN and WAGON 410 model.
R DRIVE 410	The part is used on all right hand drive 410 model.
L DRIVE 410	The part is used on all left hand drive 410 model.
3 SPEED 410	The part is used on 410 model with a 3-SPEED manual transmission.
4 SPEED 410	The part is used on 410 model with a 4-SPEED manual transmission.
P CLUTCH 410	The part is used on 410 model with a MANUAL (pedal) clutch.
A CLUTCH 410	The part is used on 410 model with a AUTO clutch.
SEDAN 410	The part is used on 410 SEDAN.
WAGON 410	The part is used on 410 WAGON.
HEAVY DUTY 410	The part is used on 410 model for heavy duty.
Exc.	"Exc" signifies except. Accordingly "410 Exc. USA" means that the part is used on 410 model except for the USA.
ONLY	"ONLY" is used together with the destination. For example, AUSTRALIA ONLY means that the part is exclusively used for Australia.
op.	"OP" signifies the part is optionally equipped.

DATSUN SEDAN
(1964 YEAR MODEL)

MODEL P410

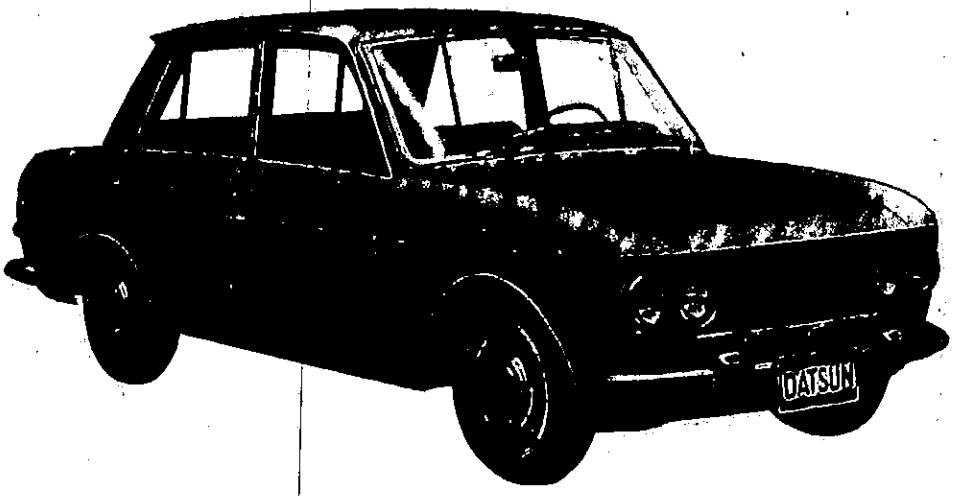

DATSUN WAGON
(1964 YEAR MODEL)

MODEL WP410

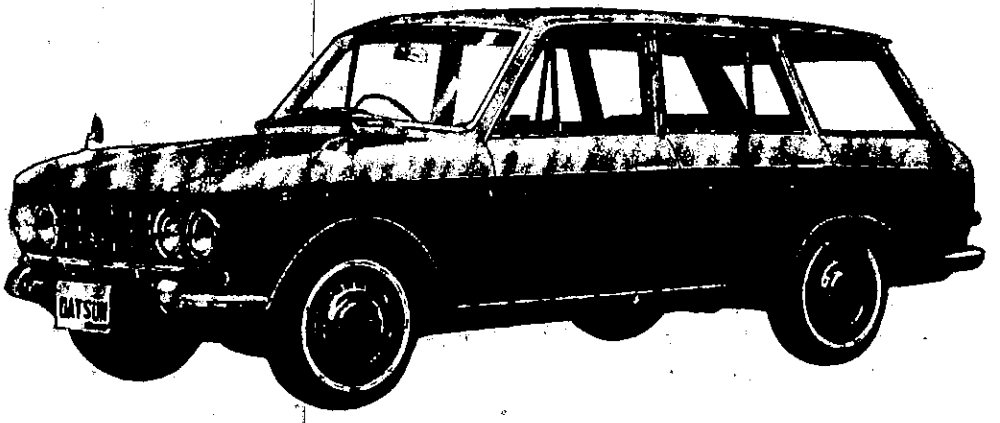

DATSUN SEDAN

(1965 YEAR MODEL)

MODEL P410

DATSUN WAGON

(1965 YEAR MODEL)

MODEL WP410

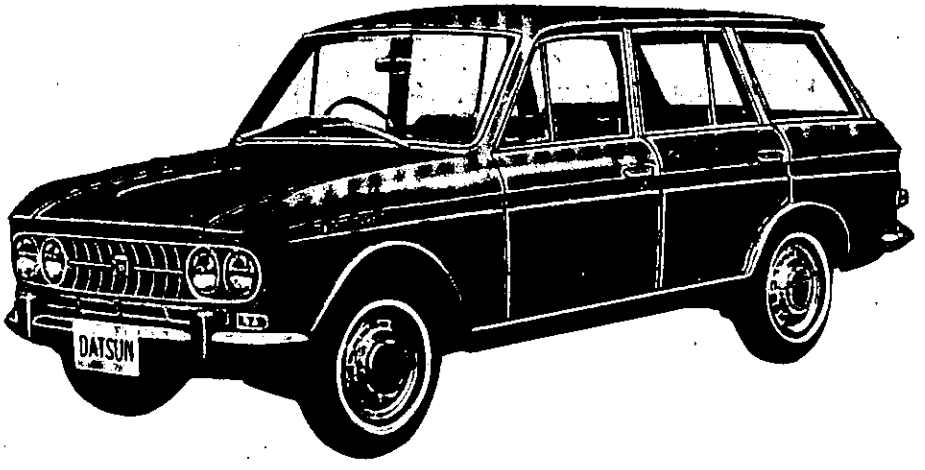

EXPLANATION OF NISSAN PARTS NUMBER SYSTEM

Our part number as a rule consists of ten digits which are made up of four factors as follows. However, in order to standardize small parts such as screws, washers, bolts, nuts and so on, which are often used on our models, we specify them as NES part according to the Nissan Engineering standard (N. E. S.).
These NES parts in principle consist of six digits or eight digits.

Section No.	Character No.		Part Type No.	Distinction No.
O O	O O O	—	O O O	O O O

1. Section No. (2 digits)
   The Section No. consists of 2 digits which indicate the major function of parts.

2. Character No. (3 digits)
   The Character No. consists of 3 digits which indicate minor classification in each Section as shown by the Table of Section and Character No. on Page 12. The character No. of 000 or X00 signifies the assembly parts.

3. Part Type No. (3 digits)
   The Part Type consists of 3 digits which in principle indicate the applied model as shown by the Table of Part Type on page 15. This means that the part is originally designed for that model. However, it may be used widely over our models. Therefore, it does not always signify the applied model.

4. Distinction No. (2 digits)
   The Distinction No. consists of 2 digits which indicate the difference between similar parts as shown below.

Kinds of Distinction	Distinction No.
a. Similarity	00-19, 60-69
b. Exclusive Service Use	25-29, 75-79
c. Material	40-45, 80-85
d. Processing	30-39, 90-94 50-59

Note: The othr Distinction Nos. are unset.

a. Similarity
When parts are only slightly changed, the distinction is shown by this No. Similar or colored parts are distinguished by this No.

For example;	74902-11400	Carpet (red)
	74902-11401	Carpet (blue)
	74902-11402	Carpet (brown)

b. Exclusive Service Use
Repair kits or sets which are used exclusively for service, are set by this No.

For example;	46010-10800	Brake Master Cylinder assembly
	46010-10825	Repair kit

c. Material
The difference of materials is distinguished by this No.

d. Processing
For the convenience of our production line process, in the case we can not supply by the original part No., the sub-assembly is supplied by this No.

For example;	20132-08750	Clamp sub-assembly
		Components
	20132-08700	Clamp-lower
	20133-08700	Clamp-upper
	1-14520-1	Bolt
	9-15115-1	Washer

5. Except those numberical part numbers, there are the part numbers beginning with letters. They are the part numbers exclusively reserved for service use.

TABLE OF SECTION AND CHARACTOR NO.

S —— Section No.
C —— Character No.

Classification S	Classification C	Section
10		Engine complete section
	000	Engine complete
	100	Engine assembly
11		Engine section No. 1
	000	Cylinder parts
	100	Oil pan parts
	200	Engine support, front
	300	Engine support, rear
	400	Engine stabilizer
12		Engine section No. 2
	000	Piston, pin & ring
	100	Connecting rod
	200	Crank shaft
	300	Flywheel
13		Camshaft & valve section
	000	Camshaft & timing gear
	200	Valve parts
14		Manifold section
	000	Manifold parts
	300	Ejector assembly
15		Lubrication section
	000	Oil pump
	100	Oil tube
	200	Oil filter
16		Fuel section No. 1
	000	Carburetor
	400	Gasoline strainer
	500	Air cleaner
	600	Fuel supply system
	700	Injection pump
	800	
17		Fuel section No. 2
	000	Fuel pump
	200	Fuel tank
	400	Fuel tank mounting
	500	Fuel piping
18		Engine control section
	000	Accelerator pedal
	100	Accelerator link
	400	Engine control
19		Decomp & governor section
	000	Decomp parts
	100	
	200	Governor parts
	300	
20		Exhaust section
	000	Exhaust tube
	100	Muffler
	200	Tail tube
21		Cooling system
	000	Water pump
	200	Thermostat
	300	Oil cooler
	400	Radiator
	500	Hose & mounting parts
23		Electrion No. 1
	100	Distributor
	200	
	300	Vacuum control
	400	Plug-spark & cords
23		Electric section No. 2
	100	Generator
	200	
	300	Regulator
	400	
	500	Regulator
24		Electric section No. 3
	000	Wring
	100	Cable parts
	200	
	400	Battery
	500	
25		Electric section No. 4
	000	Meters
	100	Meters parts
	200	Switches
	300	Switch & parts
	400	Fuse & holder parts
26		Electric section No. 5
	000	Lamps No. 1 (Outside)
	100	
	200	Lamps No. 2 (Inside)
	300	Horn
27		Room-heater & radio
	000	Room heater
	100	Control box
	300	Radio & clock
30		Clutch group
	000	Clutch with housing
	100	Clutch disc
	200	Clutch cover & pressure plate
	400	Bell-housing
	500	Clutch with drawal
	600	Clutch control
32		Transmission group
	000	Transmission assembly
	100	Case, extension covers
	200	3-shaft gear train
	600	Synchronizer parts
	700	Speed-drive parts
	800	Shift-control parts
	900	Fork & levers
33		Auxiliary gear box section
	100	Trasfer parts
	200	
	300	Power take off gear
34		Transmission control
	100	Control device
	400	Linkage
	500	Linkage parts
36		Auxiliary brake section
	100	Drem & consemings
	300	Hand brake lever
	400	Hand brake cable
	500	Linkage on axle
	600	Linkage parts

Classification S	Classification C	Section
37		Propeller shaft group
	000	Propeller shaft mounting
	100	Joint & yokes
	200	Propeller shaft primary
	300	Secondary propeller shaft
	500	Center bearing & hanger
38		Final drive unit
	100	Drive pinion & gear
	200	Companion flange
	300	Gear carrier
	400	Differential gear
	500	Front drive parts
40		Front axle section
	000	Front axle
	200	Hub & drum
	300	Road wheel
	500	Front axle parts
41		Front brake section
	000	Front brake
	100	Wheel cylinder
43		Rear axle section
	000	Rear axle
	100	Rear axle parts
	200	Hub & drum
	300	Road wheel
44		Rear brake section
	000	Rear brake
	100	Control drvice
46		Master cylinder, pedal & piping
	000	Piping & cylinder assembly
	100	Master cylinder parts
	200	Brake piping
	300	Brake tube parts
	400	Pedal parts
	500	Dust seal & mounting parts
47		Power brake section
	100	Vacuum tank
	200	Hydraulic power cylinder
	300	
	400	Vacuum tube
	500	Reservoirs mount parts

Classification S	Classification C	Section
48		Steering section
	000	Steering assembly
	100	Roller shaft
	200	Steering cover
	300	Steering mounting parts
	400	Steering wheel
	500	Steering linkage
50		Frame section
	100	Frame parts
	200	
51		Cross member section
	000	Cross member parts
	100	Hook parts
54		Front suspension section
	000	Front spring
	200	Spring mounting parts
	300	Cross member-suspension
	400	Assembly suspension
55		Rear suspension section
	000	Rear spring
	200	Spring mounting parts
56		Shock absorber section
	100	Front shock absorber
	200	Rear shock absorber & stabilizer
57		Spare tire section
	200	Spare tire carrier
60		Body complete white body
	000	Body front & body main
	100	Cab complete
61		Body front group
	000	Front body assembly
62		Radiator shell & bumper section
	100	Radiator shell
	200	
	300	Radiator grille
	400	
	500	Radiator core support
	600	Bumper apron
	650	Front bumper

Classification S	Classification C	Section
	800	Radiator shell fitting
63		Fender section
	100	Front fender
	800	Fender fitting
64		Hood ledge section
	100	Hood ledge
	800	Hood ledge fitting
65		Hood section
	100	Hood
	200	
	300	
	400	Hood hinge
	500	
	600	Hood lock
	700	
	800	Hood fitting
66		Cowl section
	100	Front pillar
	300	Cowl top
	400	Cowl side
	800	Cowl trimming
	900	Cowl trimming
67		Dash section
	100	Dash
	200	
	300	Dash lower
	800	Dash fitting
	900	Dash trimming
68		Instrument section
	100	
	200	Instrument
	300	
	400	Cluster lid
	500	Cluster lid
	600	Glove pocket & lid
	800	Instrument fitting
	900	Instrument trimming
72		Windshield section
	100	W/S outer & inner
	600	Glass & weatherstrip
	800	W/S fitting

Classification S	Classification C	Section
73		Roof section
	100	Roof panel
	200	Roof rail
	800	Roof fitting
	900	Roof trimming
74		Floor section No.
	100	Toe riser
	200	Toe board
	300	Front floor
	400	
	500	Rear floor
	600	Under sill
	700	Seat riser
	750	Tunnel
	800	Floor member
	900	Floor trimming
76		Body side section No. 1
	100	Body side frame
	200	
	300	Body side panel
	400	Body side sill
	500	Center pillar
	600	Rear pillar
	700	Rear wheel house
	800	Body side fitting
	900	Body side trimming
78		Rear fender section
	100	Rear fender
79		Back panel section
	100	Back panel
	200	
	300	Rear corner
	400	Rear seat back panel
	700	Rear window
	800	Back panel fitting
	900	Back panel trimming
80		Front door section No. 1
	100	Front door inner outer
	200	Ventilator, sash
	400	Hinge and chack link
	500	Lock, remote control handle
	700	Window regulator & handle
	800	Front door fitting
	900	Front door trimming

Classification S	Classification C	Section
82		Rear door section No. 1
	100	Rear door inner, outer
	200	Ventilator, sash
	300	Door window
	400	Hinge & check link
	500	Lock, remote control & handle
	700	Window regulator & handle
	800	Rear door fitting
	900	Rear door trimming
84		Trunk section
	100	Trunk floor
	200	Trunk side
	300	Trunk lid
	400	Trunk lid lock, handle support
	500	
	600	
	800	Trunk fitting
	900	Trunk trimming
85		Rear bumper section
	100	Rear bumper apron
	200	Rear bumper bracket
	800	Rear bumper fitting
86		Front seat section No. 1
	100	Seat cushion frame
	200	Seat back frame
	300	Seat cushion & trim
	400	
	500	Seat adjusting
	600	Seat back & trim
	700	Center arm rest & trim
	800	Seat fitting
88		Rear seat section No. 1
	100	Seat cushion frame
	200	Seat back frame
	300	Seat cushion & trim
	500	Seat adjusting
	600	Seat back & trimming
	700	Center arm rest & trim
	800	Seat fitting
93		Rear body section No. 1
	100	Guard frame
	200	Header board
	300	Side board & side gate
	400	Rear gate

Classification S	Classification C	Section
	500	Rear body floor
	600	
	650	Wheel housing
	700	Rear body sill
	800	Rear body fitting
	900	Rear body trimming
95		Body mounting section
	100	Body mounting
96		E.T.C. section No. 1
	100	Step & consernings
	200	Licence plate bracket
	300	Back mirror
	400	Sun visor
	500	Ash tray
	600	Fire extinguish
	700	Assist rail
	800	Package tray
	900	Body name & caution plate
97		E.T.C. section No. 2
	100	Reflector
	200	Plate meter
99		Car complete & tool section
	000	Car complete
	100	Chassis complete
	500	Tool & setting parts

TABLE OF PART TYPE

Small Part Type

Vehicle Type	Part Type	Vehicle Type	Part Type	Vehicle Type	Part Type	Vehicle Type	Part Type
113	001	LG222	052	N320	101	PL410-U('65)	139
L113	002	L222	053	NL320-U	103	DP410-M('65)	140
123	003	126	054	SP310	104	DP410-N	141
L123	005	PG222	065	SPL310-U	105	DP410-LM	142
114	008	PLG222	066	P410	106	P410-UT	143
124	009	WP310	071	410	107	PL410-UT	144
210	013	223	072	PL410	108	P410-P	145
L210	014	G223	073	WP410	109	SP311	146
220	015	LG223	074	WPL410	110	SPL311	147
L220	016	VG223	075	P410R	111	520	148
G220	026	VLG223	076	A122	112	L520	149
211	027	U223	077	VA122	113	U520	150
221	028	UL223	078	DP410	114	UL520	151
G221	029	311	080	DP410-L	115	V520	152
L211	030	P311	081	P410-U	116	VL520	153
L221	031	WP311-U	082	P410-N	117	DP410-R	156
A20	032	PL311-U	083	DP410-M	118	CSP311	163
115	033	WPL311-U	084	DP410-N	119	P411	165
125	034	A120	085	DP410-LN	120	DP411	166
LG220	035	SPL213	086	PL410-N	121	DP411-MTK	167
U221	036	320	087	SP310	122	P411-P	168
V221	037	L320	088	SPL310-U	123	P411-UT	169
LG221	039	VA120	089	A220	126	PL411-U	170
P212	040	U320	090	VA220	127	PL411-UT	171
310	041	V320	091	SP310('65)	129	P411-UTK	172
L310	042	UL320-U	092	SPL310('65)	130	PL411-UTK	173
U222	043	VL320-U	093	A220-H	131	WP411	174
P310	044	312	094	P410('65)	132	WPL411-U	175
WPL310	045	P312	095	PL410('65)	133	P411-N	176
VG222	046	PL312	096	WP410('65)	134	DP411-L	178
SPL212	047	WP312	097	WPL410('65)	135	P411-R	179
VG221	049	WPL312	098	DP410('65)	136	B10	180
222	050	A121	099	DP410-L('65)	137	VB10	181
G222	051	VA121	100	P410-U('65)	138	B10-D	182

Medium Part Type

Vehicle Type	Part Type	Vehicle Type	Part Type	Vehicle Type	Part Type	Vehicle Type	Part Type
VB10-D	183	B130	300	WP30	349	GHC141	621
P411	184	B40	301	40	350	HC141	636
DP411	185	VB40	304	L40	351	HQC141	637
DP411-L	186	C40	305	C141	352	LH31('64)	700
PL411-U	187	VC40	307	P30-U	357	LG31('64)	701
DR411	188	B131	308	LC141	358	LG31S('64)	702
RL411-UTK	189	B41	309	GLC140	359	L31('64)	703
P411-P	190	VB41	310	F40	360	VPL31('64)	704
P411-U	191	B42	313	FR40	361	WPL31('64)	705
P411-R	192	C42	314	VC141	362	H31M('64)	706
DP411-R	193	NB42	315	VNC141	363	H31-JD('64)	707
DP411-MTK	194	VC42	316	KC141	364	H31-U('64)	708
PL411-UTK	195	B132	317	GC141	365	LG31-UM('64)	709
WP411	196	VB132	320	VP30	366	40T	710
VP411	197	FPB42	321	H31	367	Q40T	711
WPL411	198	30	322	G31	368	H31('65)	712
A221	199	C43	323	—	369	G31('65)	713
GA221	200	VC43	324	31	370	G31S('65)	714
520('67)	205	FRB42	325	VP31	371	31('65)	715
L520('67)	206	D30	326	WP31	372	VP31K('65)	716
P411('67)	241	V30	327	GLC141	373	WP31('65)	717
DP411L('67)	242	KC43	330	LH31	378	TH31	718
D411-R('67)	243	B140	331	H31U	379	TH31('65)	719
DP411-R('67)	244	NB140	332	G31U	380	LH31-U('65)	720
		C140	333	H31J	381	LG31-U('65)	721
		L30	335	H31-M	382	LG31S-U('65)	722
		VC140	336	G31S	383	VPL31-UK('65)	723
		VNC140	337	H31('64)	387	WPL31-U('65)	724
		FRB140	338	G31('64)	388	TLH31-U('65)	725
		FB140	339	G31S('64)	389	G31SY-P('65)	727
		GB140	341	31('64)	390	G31SY-P('64)	728
		G30	342	VP31-K('64)	391	31YP('64)	729
		LB140	343	WP31('64)	392	P130	730
		KC140	344	GQC141	396	P130S	731
		LC140	346	DC141	399	VP130	732

Vehicle Type	Part Type	Vehicle Type	Part Type	Vehicle Type	Part Type	Vehicle Type	Part Type
V130	733						
WP130							
W130							
H130	734						
Q130	735						
130D	736						
130							
130-A	737						
P130-A							
130-P	739						
41	740						
F41	742						
LC142	743						
N41	744						
L41	745						
41('67)	747						
L41('67)	748						
Q41('67)	749						
DQC240	768						
CQC240	770						
P130('67)	780						
H130('67)	781						
130S('67)	782						

CONVERSION LIST

Length

	m.metre	c.metre	metre	k.metre	inch	foot	yard	mile	s. mile
m. metre	1	0.10000	0.00100	,	0.03937	0.00328	0.00109	,	
c. metre	10.0000	1	0.01000	0.00001	0.39371	0.03281	0.01094		
metre	1000.00	100.000	1	0.00100	39.3707	3.28089	1.09363	0.00062	0.00054
k. metre		100000	1000.00	1	39370.7	3280.89	1093.63	0.62138	0.53962
inch	25.3995	2.53995	0.02540	0.00003	1	0.08333	0.02778	0.00002	0.00001
foot	304.794	30.4794	0.30479	0.00030	12.0000	1	0.33333	0.00019	0.00016
yard	914.383	91.4383	0.91438	0.00091	36.0000	3.00000	1	0.00057	0.00049
mile		160931	1609.31	1.60931	63360.0	5280.00	1760.00	1	0.86842
s. mile		185315	1853.15	1.85315	72960.0	6080.00	2026.66	1.15151	1

Weight

	gram	k. gram	ton	s. ton	l. ton	ounce	pound
gram	1	0.00100				0.03527	0.00220
k. gram	1000.00	1	0.00100	0.00110	0.00098	35.2739	2.20462
ton		1000.00	1	1.10230	0.98421	35273.9	2204.62
s. ton	907185	907.185	0.90719	1	0.89286	32000.0	2000.00
l. ton		1016.04	1.01604	1.12000	1	35840.0	2240.00
ounce	28.3495	0.02835	0.00003	0.00003	0.00003	1	0.06250
pound	453.592	0.45359	0.00045	0.00050	0.00045	16.0000	16.0000

Capacity

	cub. metre	litre	cub. inch	cub. foot	cub. yard	U. S. gallon	U. K. gallon
Cub. metre	1	1000.00	61027.1	35.3165	1.30802	264.186	220.216
litre	0.00100	1	61.0271	0.03532	0.00131	0.26419	0.22022
cub. inch	0.00002	0.01639	1	0.00058	0.00002	0.00433	0.00361
cub. foot	0.02832	28.3167	1728.00	1	0.03704	7.48051	6.23549
cub. yard	0.76455	764.554	46656.0	27.0000	1	201.974	168.358
U. S. gallon	0.00379	3.78543	231.000	0.13368	0.00495	1	0.83270
U. K. gallon	0.00455	4.54596	277.413	0.16037	0.00594	1.20091	1

SECTION INDEX

PART NAME	FIG. NO.
ENGINE	
ENGINE ASSEMBLES	1
CYLINDER BLOCK	2
PISTON & CRANKSHAFT	3
CAM SHAFT & VALVE MECHANISM	4
CYLINDER HEAD	5
MANIFOLD	6
OIL PUMP (TO E/# E1-547143)	7
OIL PUMP (FROM E/# E1-547144)	8
OIL FILTER	9
CARBURETOR (NIKKI)	10
CARBURETOR (TWIN) (SS)	11
AIRCLEANER	12
AIR CLEANER (SS)	13
FUEL PUMP	14
FUEL STRAINER	15
FUEL TANK	16
ACCELERATOR	17
EXHAUST TUBES	18
WATER PUMP & FAN	19
RADIATOR	20
ENGINE MOUNTING	21
ELECTRICAL	
DISTRIBUTOR (HITACHI) (TO E/# E1-635918)	22
DISTRIBUTOR (HITACHI) (FROM E/# E1-635919)	23
DISTRIBUTOR (MITSUBISHI) (SS)	24
ALTERNATOR (MITSUBISHI)	25
STARTER MOTOR (HITACHI) (TO JAN-65)	26
STARTER MOTOR (HITACHI) (FROM FEB-65)	27
HIGH TENTION CABLE & ELECTRICAL PARTS MOUNTING	28
WIRING	29
SWITCHES	30
ELECTRIC UNIT	31
ROOM HEATER	32
RADIO & CLOCK	33
BATTERY	34
WINDSHIELD WIPER	35
WINDSHIELD WASHER	36
INSTRUMENT METER	37
HEAD LAMP	38
PARK & TURN SIGNAL LAMP	39
REAR COMBINATION LAMP	40
FOG & INSPECTION LAMP	41
ROOM LAMP	42
LICENCE LAMP	43
POWER TRAIN	
CLUTCH PEDAL & MASTER CYLINDER	44
AUTO-CLUTCH	45
AUTO-CLUTCH RELEASE MECHANISM	46
AUTO-CLUTCH MASTER CYLINDER	47
CLUTCH OPERATING CYLINDER	48
CLUTCH	49
TRANSMISSION ASSEMBLIES	50
TRANSMISSION CASE (3 SPEED)	51
TRANSMISSION CASE (4 SPEED)	52
TRANSMISSION GEAR (3 SPEED)	53
TRANSMISSION GEAR (4 SPEED)	54
TRANSMISSION FORK & ROD (3 SPEED)	55
TRANSMISSION FORK & LEVER (4 SPEED)	56
PROPELLER SHAFT	57
GEAR CARRIER	58
REMOTE CONTROL LEVER	59
REMOTE CONTROL LINKAGE	60
BRAKE	
BRAKE PEDAL & MASTER CYLINDER	61
FRONT BRAKE	62
REAR BRAKE	63
BRAKE PIPING	64
HAND BRAKE CONTROL	65
HAND BRAKE LINKAGE	66

PART NAME	FIG. NO.
AXLE	
FRONT SUSPENSION LINK	67
FRONT HUB & DRUM	68
FRONT SUSPENSION MEMBER & SHOCK ABSORBER	69
REAR AXLE	70
REAR SUSPENSION	71
STEERING	
STEERING WHEEL	72
STEERING GEAR	73
STEERING LINKAGE	74
BODY	
FRONT OUTSIDE VIEW	75
FRONT FENDER & HOOD PANEL	76
HOOD LOCK CONTROL	77
WINDSHIELD GLASS	78
INSTRUMENT PANEL & FITTING	79
DASH TRIMMING	80
BODY SIDE TRIMMING	81
FLOOR TRIMMING (3 SPEED)	82
FLOOR TRIMMING (4 SPEED)	83
FRONT DOOR PANEL	84
FRONT DOOR TRIMMING	85
FRONT DOOR LOCK & REGULATOR	86
REAR DOOR PANEL	87
REAR DOOR TRIMMING	88
REAR DOOR LOCK & REGULATOR	89
REAR FENDER & BUMPER	90
TRUNK LID & FITTING	91
TAIL GATE (WAGON)	92
SIDE WINDOW & TAIL GATE TRIMMING (WAGON)	93
AUXILIARY FLOOR (WAGON)	94
PANEL PARTS	95
REAR SEAT (WAGON)	96
FRONT & REAR SEAT	97
CYLINDER LOCK & KEY	98

PART NAME	FIG. NO.

NOTE

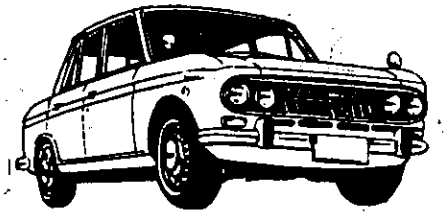

ENGINE ASSEMBLIES

Note: This figure will be given later.

S	KEY NO.	PART NO.	PART NAME	QTY	SALES UNIT	MODEL	ICA
			ENGINE ASSEMBLIES				
*	1	10000-11452	ASSY-ENGINE,WITH TRANS MISSION	1		SS 410	
*	2	10000-11751	ASSY-ENGINE,WITH TRANS MISSION	1		UN.WUN.410	
*	3	10001-21501	ASSY-ENGINE,WITH TRANS MISSION	1		LN.WLN.410	
*	4	10000-12151	ASSY-ENGINE,WITH TRANS MISSION	1		LUN.WLUN.4 10	
*	5	10000-10852	ASSY-ENGINE,WITH TRANS MISSION	1		U.WU.410	
*	6	10000-11651	ASSY-ENGINE,WITH TRANS MISSION (F & S CLUTCH)	1		U.WU.410	Y
*	7	10000-13850	ASSY-ENGINE,WITH TRANS MISSION (F & S CLUTCH) (FROM 64-9)	1		U.WU.410	N
*	8	10000-10850	ASSY-ENGINE,WITH TRANS MISSION	1		L.WL.410	
*	9	10000-10852	ASSY-ENGINE,WITH TRANS MISSION (F & S CLUTCH)	1		L.WL.410	Y
*	10	10000-13950	ASSY-ENGINE W/TRANSMIS SION(F & S CLUTCH)(FRO M 64-9)	1		L.WL.410	N
*	11	10000-10851	ASSY-ENGINE,WITH TRANS MISSION	1		LU.WLU.410	
*	12	10000-10853	ASSY-ENGINE,WITH TRANS MISSION	1		LU.WLU.410	Y
*	13	10000-12451	ASSY-ENGINE,WITH TRANS MISSION	1		UT.LUT.WUT .WLUT.410	
*	14	10000-14350	ASSY-ENGINE,WITH TRANS MISSION (FROM 64-9)	1		UT.LUT.WUT .WLUT.410	N

REVISED: SEPTEMBER,1968

Printed in Japan

FIG. 1

NISSAN MOTOR CO., LTD.

S	KEY NO.	PART NO.	PART NAME	Q'TY	SALES UNIT	MODEL	ICA
	15	10000-10856	ASSY-ENGINE,WITH TRANS MISSION	1	1	LU.WLU.(FO R U.S.A.)4 10	
*	16	10000-13951	ASSY-ENGINE,WITH TRANS MISSION (FROM 64-9)	1		LU.WLU.(FO R U.S.A.)4 10	N
*	17	10000-12154	ASSY-ENGINE,WITH TRANS MISSION	1		LUN.WLUN.(FOR U.S.A.)410	
*	18	10000-12453	ASSY-ENGINE,WITH TRANS MISSION	1		LUN.WLUT.(FOR U.S.A.)410	
*	19]	10000-14450	ASSY-ENGINE,WITH TRANS MISSION (FROM 64-9)	1		LUN.WLUT.(FOR U.S.A.)410	N
*	20	10000-10854	ASSY-ENGINE,WITH TRANS MISSION (FOR 2 SMB BAT TERY)	1		L.WL.410	
*	21	10000-11652	ASSY-ENGINE,WITH TRANS MISSION (FOR 2 SMB BAT TERY)	1		U.WU.410	
*	22	10000-12452	ASSY-ENGINE,WITH TRANS MISSION (FOR 2 SMB BAT TERY)	1		UT.LUT.WUT .WLUT.410	
*	23	10000-10855	ASSY-ENGINE,WITH TRANS MISSION (FOR 2 SMB BAT TERY)	1		LU.WLU.410	
*	24	10000-11752	ASSY-ENGINE,WITH TRANS MISSION (FOR 2 SMB BAT TERY)	1		UN.WUN.410	
*	25	10000-12152	ASSY-ENGINE,WITH TRANS MISSION (FOR 2 SMB BAT TERY)	1		LN.WLN.410	
*	26	10000-12153	ASSY-ENGINE,WITH TRANS MISSION (FOR 2 SMB BAT TERY)	1		LUN.WLUN.4 10	
*	27	10001-11452	ASSY-ENGINE,WITH CLUTC H	1		SS 410	

REVISED: SEPTEMBER,1968

Printed in Japan

S	KEY NO.	PART NO.	PART NAME	Q'TY	SALES UNIT	MODEL	ICA
*	28	10001-11430	ASSY-ENGINE,WITH CLUTCH	1		LN.WLN.410	
*	29	10001-10830	ASSY-ENGINE,WITH CLUTCH	1		UN.LUN.WUN.WLUN.410	
*	30	10001-10851	ASSY-ENGINE,WITH CLUTCH	1		LU.WU.WLU.U.410	
	31	10001-10852	ASSY-ENGINE,WITH CLUTCH (F & S CLUTCH)	1	1	LU.WU.WLU.U.UT.LUT.WUT.WLUT.410	N
	32	10001-10858	ASSY-ENGINE,WITH CLUTCH (FOR 2 SMB BATTERY)	1		U.UT.LU.LUT.WU.WUL.410	
*	33	10001-13830	ASSY-ENGINE,WITH CLUTCH (FOR 2 SMB BATTERY) (FROM 65)	1		U.UT.LU.LUT.WU.WUL.410	N
	34	10001-10839	ASSY-ENGINE,WITH CLUTCH (FOR 2 SMB BATTERY)	1		UN.LUN.WUN.WLUN.410	
	35	10001-10658	ASSY-ENGINE,WITH CLUTCH (FOR 2 SMB BATTERY)	1		L.WL.410	
	36	10001-11439	ASSY-ENGINE,WITH CLUTCH (FOR 2 SMB BATTERY)	1	1	LN.WLN.410	
*	37	10001-10838	ASSY-ENGINE,WITH CLUTCH	1		LUN.WLUN.(FOR U.S.A.)410	
	38	10001-10856	ASSY-ENGINE,WITH CLUTCH	1	1	LU.LUT.WLU.(FOR U.S.A.)410	
*	39	10001-13831	ASSY-ENGINE,WITH CLUTCH	1		LU.LUT.WLU.(FOR U.S.A.)410	N
	40	10101-10625	KIT-REPAIR,ENGINE GASKET	1		410	

REVISED: SEPTEMBER,1968

Printed in Japan

NOTE

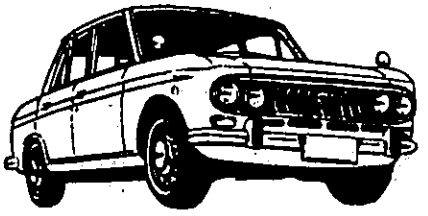

NOTE

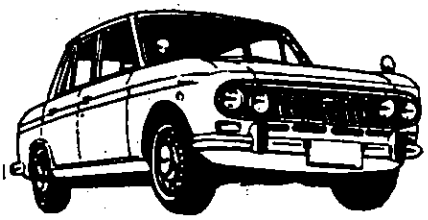

CYLINDER BLOCK

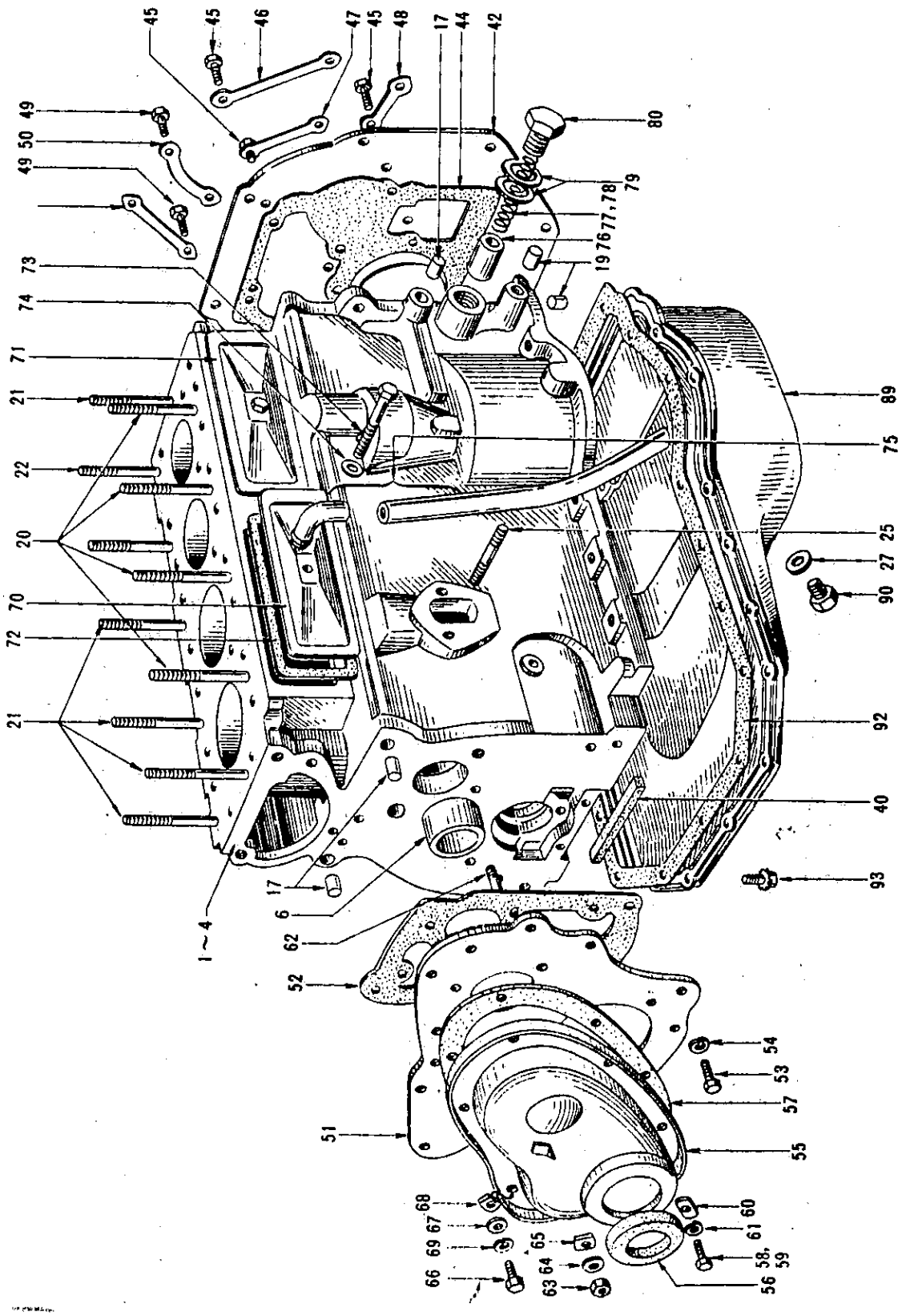

CYLINDER BLOCK

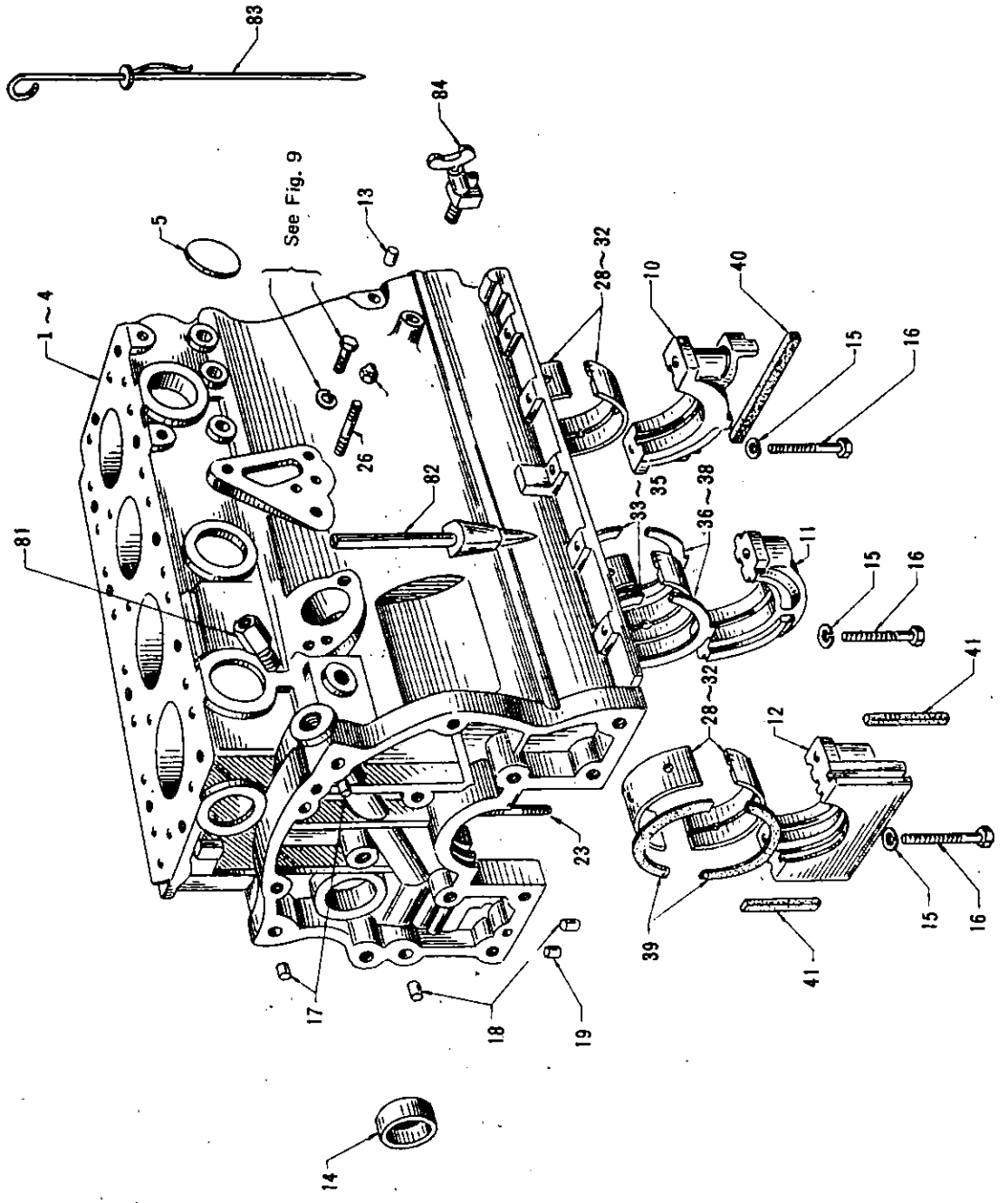

S	KEY NO.	PART NO.	PART NAME	Q'TY	SALES UNIT	MODEL	ICA
			CYLINDER BLOCK				
*	1	11010-09551	ASSY-BLOCK,CYLINDER,WITH PLUGS	1	1	410 EXC.SS	
	2	11010-10630	ASSY-BLOCK,CYLINDER,WITH PLUGS (FROM E/# E1-547144)	1		410 EXC.SS	N
	3	11010-11450	ASSY-BLOCK,CYLINDER,WITH PLUGS	1		410 SS	
	4	11010-11451	ASSY-BLOCK,CYLINDER,WITH PLUGS (FROM E/# E1-547144)	1	1	410 SS	N
	5	00933-13500	PLUG-WELCH,CYLINDER BLOCK	4	50	410	
	6	13002-08000	SET-BUSHING,CAM SHAFT	1	1	410	
	7	13003-08000	SET-BUSHING,CAM SHAFT (U/S 0.25MM)	1		410	
	8	13004-08000	SET-BUSHING,CAM SHAFT (U/S 0.50MM)	1		410	
	9	13004-08001	SET-BUSHING,CAM SHAFT (U/S 0.75MM)	1	1	410	
*	10	12282-09400	CAP-MAIN BEARING,FRONT (NOT FOR SALE)	1		410	
	11	12283-09400	CAP-MAIN BEARING,MIDDLE	1	1	410	
	12	12286-09400	CAP-MAIN BEARING,REAR	1		410	
	13	11024-30000	PLUG-CHAIN TENSIONER OIL FEED (BRASS)	1		410	
	14	11019-32200	PLUG-TAPER (44.425)	1	10	410	
*	15	00915-21800	WASHER-LOCK TO FIX BEARING CAP	6	50	410	
	16	00134-86500	BOLT TO FIX BEARING CAP	6	25	410	

REVISED: SEPTEMBER,1968

Printed in Japan

S	KEY NO.	PART NO.	PART NAME	Q'TY	SALES UNIT	MODEL	ICA
*	17	11021-30000	PLUG-CRANK CASE OIL GALLERY (BRASS)	5	50	410	
	18	11022-30000	PLUG-TAPER,CRANK CASE OIL HOLE (BRASS)	2	20	410	
	19	11023-30000	PLUG-OIL RELIEF VENT HOLE (BRASS)	2		410	
	20	11056-30000	STUD-CYLINDER HEAD (LONG)	4	10	410	
	21	11057-30000	STUD-CYLINDER HEAD (SHORT)	6	10	410	
	22	11055-10600	STUD-CYLINDER HEAD (MIDDLE)	1		410	
	23	15068-30000	STUD-OIL PUMP	1	10	410	
	24	15067-10600	STUD-OIL PUMP	1	10	410	Y
	25	00253-52510	STUD (TO FIX FUEL PUMP TO CRANK CASE)	2	50	410	
	26	00214-62810	STUD (TO FIX OIL FILTER)	1		410	
	27	11026-61000	WASHER-COPPER,PLUG	2	10	410	
	28	12231-09600	BEARING-CRANK SHAFT,HALF (STANDARD SIZE)	6	6	410	
	29	12233-09600	BEARING-CRANK SHAFT,HALF (0.010 UNDER SIZE)	6	6	410	
	30	12234-09600	BEARING-CRANK SHAFT,HALF(0.020 UNDER SIZE)	6	6	410	
	31	12235-09600	BEARING-CRANK SHAFT,HALF (0.030 UNDER SIZE)	6	6	410	
	32	12236-09600	BEARING-CRANK SHAFT,HALF (0.040 UNDER SIZE)	6	6	410	
*	33	12280-30800	WASHER-THRUST,BI-METAL (UPPER)	2	10	410	
*	34	12318-30800	WASHER-THRUST,BI-METAL (UPPER)	2	10	410	

Printed in Japan

REVISED: SEPTEMBER,1968

S	KEY NO.	PART NO.	PART NAME	Q'TY	SALES UNIT	MODEL	ICA
	35	12319-30800	WASHER-THRUST,BI-METAL (UPPER)	2	10	410	
*	36	12281-30800	WASHER-THRUST,BI-METAL (LOWER)	2	10	410	
*	37	12320-30800	WASHER-THRUST,BI-METAL (LOWER)	2		410	
*	38	12321-30800	WASHER-THRUST,BI-METAL (LOWER)	2		410	
	39	12279-09400	SEAL-OIL,CRANK CASE	2	10	410	
	40	12287-09400	SEAL-OIL,FRONT BEARING CAP	1		410	
	41	12289-09400	SEAL-OIL,REAR BEARING SIDE	2	5	410	
	42	30410-08000	PLATE-GEAR BOX MOUNTIN G	1		410	
	43	30412-30000	DOWEL-GEAR BOX MOUNTIN G PLATE	1	5	410	
	44	32011-09400	GASKET-REAR PLATE	1	10	410	
	45	00124-62210	SCREW-SET TO FIX GEAR BOX MOUNTING PLATE TO CRANK CASE	8		410	
	46	30526-30000	WASHER-LOCK TO FIX GEA R BOX MOUNTING PLATE T O CRANK CASE	1	50	410	
	47	30527-30000	WASHER-LOCK TO FIX GEA R BOX MOUNTING PLATE	1	50	410	
	48	30528-30000	WASHER-LOCK TO FIX GEA R BOX MOUNTING PLATE	2	50	410	
	49	00114-52210	SCREW-SET TO FIX GEAR BOX MOUNTING PLATE	4		410	
	50	30545-30000	WASHER-LOCK TO FIX GEA R BOX MOUNTING PLATE	1	50	410	
*	51	13034-01300	PLATE-ENGINE MOUNTING, FRONT	1	1	410	

Printed in Japan

REVISED: SEPTEMBER,1968

S	KEY NO.	PART NO.	PART NAME	Q'TY	SALES UNIT	MODEL	ICA
	52	13037-01300	GASKET (FRONT MOUNTING PLATE TO CYLINDER BLOCK)	1	10	410	
	53	00114-52010	SCREW-SET TO FIX FRONT ENGINE MOUNTING PLATE TO CYLINDER BLOCK	3		410	
	54	00918-21500	WASHER-LOCK TO FIX FRONT ENGINE MOUNTING PLATE TO CYLINDER BLOCK	3		410	
	55	13035-10600	ASSY-COVER,TIMING CHAIN CASE	1	1	410	
	56	13042-30000	FELT-RING,CRANK CASE FRONT COVER	1		410	
	57	13044-08000	GASKET-TIMING CHAIN CASE COVER	1	10	410	
	58	00114-40810	BOLT TO FIX CHAIN CASE COVER TO MOUNTING PLATE	1	50	410	
	59	00114-41010	BOLT TO FIX CHAIN CASE COVER TO MOUNTING PLATE	2		410	
	60	13047-30000	WASHER-SPECIAL TO FIX CHAIN CASE COVER TO MOUNTING PLATE	3	50	410	
*	61	00915-11400	WASHER-LOCK TO FIX CHAIN CASE COVER TO MOUNTING PLATE	3	50	410	
	62	00253-41810	STUD TO FIX FRONT PLATE & COVER TO CYLINDER BLOCK	2		410	
	63	00911-14410	NUT TO FIX FRONT PLATE & COVER TO CYLINDER BLOCK	2		410	
*	64	00915-11400	WASHER-LOCK TO FIX FRONT PLATE & COVER TO CYLINDER BLOCK	2	50	410	
	65	13047-30000	WASHER-SPECIAL TO FIX FRONT PLATE & COVER TO CYLINDER BLOCK	2	50	410	

S	KEY NO.	PART NO.	PART NAME	Q'TY	SALES UNIT	MODEL	ICA
	66	00114-52010	SCREW TO FIX FRONT PLATE & COVER TO CYLINDER BLOCK	4		410	
	67	11122-01300	WASHER-PLAIN TO FIX FRONT PLATE & COVER TO CYLINDER BLOCK	1	10	410	
	68	13048-30000	WASHER-SPECIAL TO FIX FRONT PLATE & COVER TO CYLINDER BLOCK	3	50	410	
*	69	00915-11500	WASHER-LOCK TO FIX FRONT PLATE & COVER TO CYLINDER BLOCK	4	50	410	
	70	11027-09401	ASSY-COVER,SIDE,CYLINDER BLOCK (FRONT)	1	5	410	
	71	11029-09400	COVER-SIDE,CYLINDER BLOCK (REAR)	1	10	410	
	72	11033-09400	GASKET-CYLINDER BLOCK SIDE COVER	2	20	410	
	73	00114-54510	SCREW TO FIX CYLINDER BLOCK SIDE COVER	2		410	
	74	11035-30000	WASHER TO FIX CYLINDER BLOCK SIDE COVER	2	10	410	
	75	15262-10600	ASSY-TUBE,BREATHER	1	10	410	
*	76	15132-30000	VALVE-OIL RELEASE (UP TO 64-9)	1		410	
*	77	15133-30000	SPRING-OIL RELEASE VALVE	1	10	410	
	78	15133-10601	SPRING-OIL RELEASE VALVE (FROM E/# E1-439513)(UP TO SEPT.-64)	1		410	Y
	79	15136-30000	WASHER-OIL RELEASE VALVE SPRING CAP NUT (UP TO SEPT.-64)	2	50	410	
	80	15134-30000	NUT-OIL RELEASE VALVE SPRING CAP (UP TO SEPT.-64)	1	5	410	

Printed in Japan

REVISED: SEPTEMBER,1968

S	KEY NO.	PART NO.	PART NAME	Q'TY	SALES UNIT	MODEL	ICA
	81	25241-30000	ADAPTER-OIL PRESSURE SWITCH	1	5	410	
	82	15146-10600	GUIDE-OIL LEVEL GAUGE	1	5	410	
	83	15140-10600	ASSY-GAUGE,OIL LEVEL	1	10	410	
	84	21211-04100	COCK-DRAIN	1		410	
	85	21211-12601	COCK-DRAIN	1	5	410	Y
	86	11012-08100	LINER-CYLINDER (4.00 OVER SIZE)	4	8	410	
	87	11013-08100	LINER-CYLINDER (4.50 OVER SIZE)	4	8	410	
	88	11014-08100	LINER-CYLINDER (5.00 OVER SIZE)	4	8	410	
	89	11110-10600	ASSY-PAN,OIL	1		410	
*	90	11120-61000	ASSY-PLUG,DRAIN	1	10	410	
	91	11128-61001	PLUG-DRAIN	1	50	410	Y
*	92	11121-09400	GASKET-OIL PAN	1	10	410	
	93	11125-30000	SCREW (TO FIX OIL PAN)	19		410	
	94	11026-61000	WASHER-COPPER,PLUG	1	10	410	

Printed in Japan

REVISED: SEPTEMBER,1968

NOTE

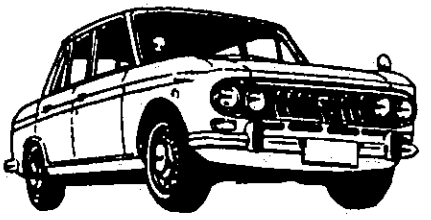

NOTE

PISTON & CRANK SHAFT

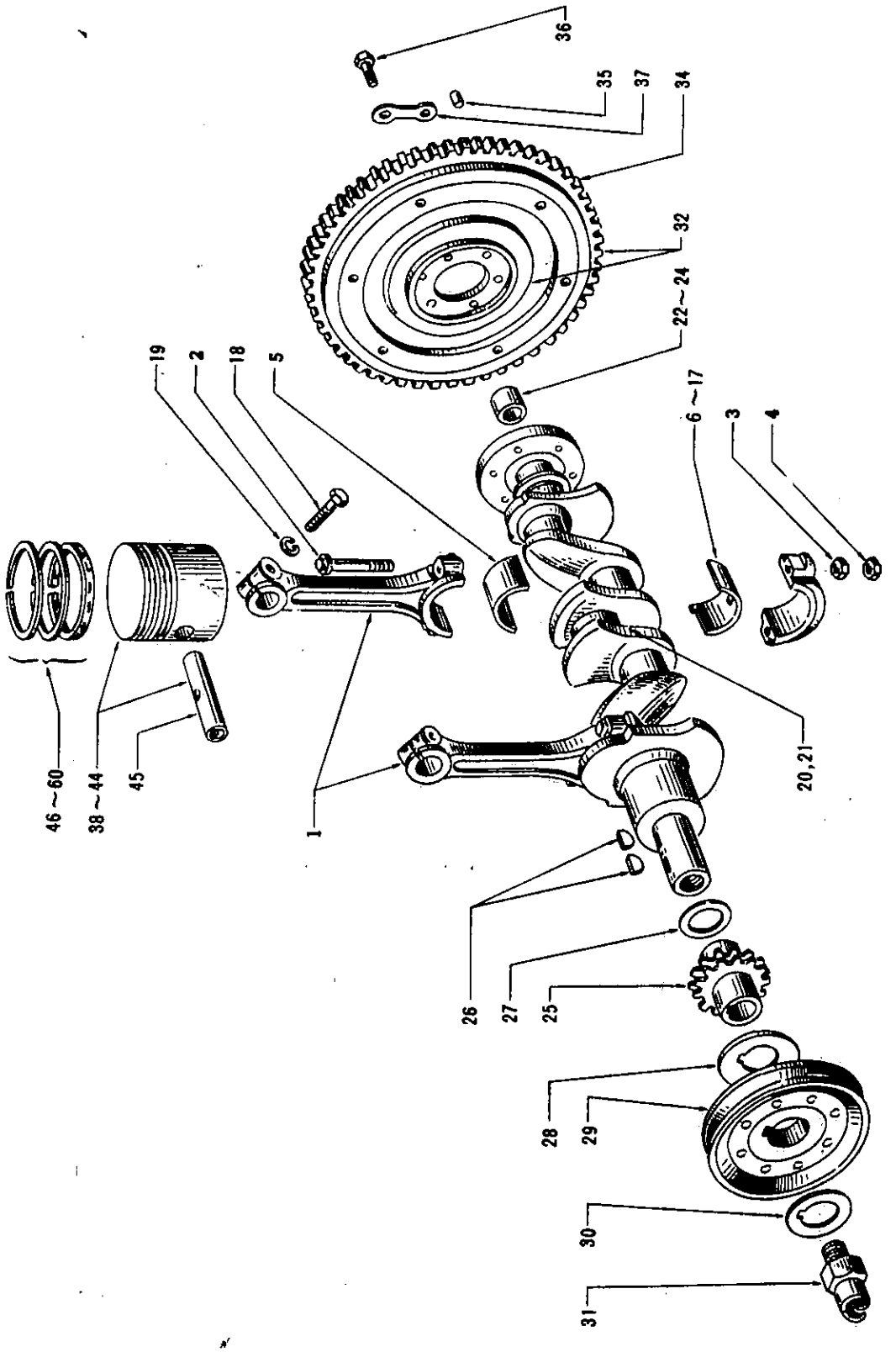

PISTON & CRANK SHAFT

S	KEY NO.	PART NO.	PART NAME	Q'TY	SALES UNIT	MODEL	ICA
	1	12100-09500	ASSY-ROD,CONNECTING	4		410	
	2	12109-04400	BOLT-CONNECTING ROD	8		410	
*	3	00911-24500	NUT FOR CONNECTING ROD BOLT	8	100	410	
	4	12112-02700	NUT-PAL FOR CONNECTING ROD BOLT	8	50	410	
	5	12111-09405	BUSHING-CONNECTING ROD ,UPPER (STANDARD SIZE, F500)	8	8	410	
	6	12121-09405	BUSHING-CONNECTING ROD ,UPPER UNDER SIZE 0.08 MM	4	4	410	
*	7	12121-09402	BUSHING-CONNECTING ROD ,LOWER UNDER SIZE 0.08 MM	4	8	410	
	8	12122-09405	BUSHING-CONNECTING ROD ,UPPER UNDER SIZE 0.12 MM	4	4	410	
*	9	12122-09402	BUSHING-CONNECTING ROD ,LOWER UNDER SIZE 0.12 MM	4	8	410	
	10	12117-09405	BUSHING-CONNECTING ROD ,UPPER UNDER SIZE 0.25 MM	4		410	
*	11	12117-09402	BUSHING-CONNECTING ROD ,LOWER UNDER SIZE 0.25 MM	4		410	
	12	12118-09405	BUSHING-CONNECTING ROD ,UPPER UNDER SIZE 0.50 MM	4		410	
*	13	12118-09402	BUSHING-CONNECTING ROD ,LOWER UNDER SIZE 0.50 MM	4		410	

Printed in Japan

REVISED: SEPTEMBER,1968

S	KEY NO.	PART NO.	PART NAME	Q'TY	SALES UNIT	MODEL	ICA
	14	12119-09405	BUSHING-CONNECTING ROD ,UPPER UNDER SIZE 0.75 MM	4	8	410	
*	15	12119-09402	BUSHING-CONNECTING ROD ,LOWER UNDER SIZE 0.75 MM	4	4	410	
	16	12120-09405	BUSHING-CONNECTING ROD ,UPPER UNDER SIZE 1.00 MM	4		410	
*	17	12120-09402	BUSHING-CONNECTING ROD ,LOWER UNDER SIZE 1.00 MM	4		410	
	18	00134-52800	BOLT FOR CONNECTING ROD	4	50	410	
*	19	00915-21500	WASHER-LOCK FOR CONNECTING ROD	4	50	410	
*	20	12200-09500	COMP.-CRANK SHAFT	1		410 & "61 "	
	21	12200-09522	COMP.-CRANK SHAFT	1	1	A CLUTCH 410	
	22	32202-30000	BUSHING-1ST MOTION SHAFT	1		P CLUTCH 410	
	23	32202-09500	BUSHING-1ST MOTION SHAFT,NEEDLE	1	1	P CLUTCH 410	
	24	32202-09520	BUSHING-PILOT	1	1	A CLUTCH 410	
	25	13021-30000	GEAR-CRANK SHAFT	1	1	410	
	26	12316-30000	KEY-CRANK SHAFT	2	10	410	
	27	12301-30000	WASHER-PACKING,CRANK SHAFT GEAR	AR	1	410	
	28	12302-30000	THROWER-OIL,CRANK SHAFT,FRONT	1	50	410	
	29	12303-10600	PULLEY-CRANK SHAFT	1	1	410	
	30	12308-10600	WASHER-LOCK,STARTING NUT	1	50	410	

Printed in Japan

REVISED: SEPTEMBER,1968

S	KEY NO.	PART NO.	PART NAME	Q'TY	SALES UNIT	MODEL	ICA
	31	12309-30800	NUT-STARTING	1	10	410	
*	32	12310-10600	ASSY-FLYWHEEL	1	1	P CLUTCH 4 10	
	33	12310-10601	ASSY-FLYWHEEL (F & S CLUTCH)	1	1	P CLUTCH 4 10	
	34	12312-09600	GEAR-RING,FLYWHEEL	1		P CLUTCH 4 10	
	35	12313-30000	DOWEL-CLUTCH TO FLYWHEEL	1	10	P CLUTCH 4 10	
*	36	00134-62200	BOLT TO FIX FLYWHEEL TO CRANK SHAFT	6	25	P CLUTCH 4 10	
	37	12314-30000	WASHER-LOCK TO FIX FLYWHEEL TO CRANK SHAFT	3	50	P CLUTCH 4 10	
*	38	12010-09400	SET-PISTON & PISTON PIN (STANDARD SIZE)	4		410	
*	39	12010-09401	SET-PISTON & PISTON PIN (0.25MM OVER SIZE)	4	4	410	
*	40	12010-09402	SET-PISTON & PISTON PIN (0.50MM OVER SIZE)	4	4	410	
*	41	12010-09403	SET-PISTON & PISTON PIN (0.75MM OVER SIZE)	4	4	410	
*	42	12010-09404	SET-PISTON & PISTON PIN (1.00MM OVER SIZE)	4		410	
*	43	12010-09405	SET-PISTON & PISTON PIN (1.25MM OVER SIZE)	4		410	
*	44	12010-09406	SET-PISTON & PISTON PIN (1.50MM OVER SIZE)	4	4	410	
	45	12024-30000	PIN-PISTON	4	4	410	
*	46	12033-10800	SET-RING,PISTON (STANDARD SIZE)	1		410	
*	47	12033-10601	SET-RING,PISTON (STANDARD SIZE,RIK-VENT)	1		410	
*	48	12033-01302	SET-RING,PISTON,WITH EXPANDER (STANDARD SIZE)	1		410	

Printed in Japan

REVISED: SEPTEMBER,1968

FIG. 3

NISSAN MOTOR CO., LTD.

S	KEY NO.	PART NO.	PART NAME	Q'TY	SALES UNIT	MODEL	ICA
*	49	12035-01302	SET-RING,PISTON (0.25MM OVER SIZE)	1		410	
*	50	12035-01301	SET-RING,PISTON,WITH EXPANDER (0.25MM OVER SIZE)	1		410	
*	51	12036-01302	SET-RING,PISTON (0.50MM OVER SIZE)	1	1	410	
*	52	12036-01301	SET-RING,PISTON,WITH EXPANDER (0.50MM OVER SIZE)	1		410	
*	53	12037-01302	SET-RING,PISTON (0.75MM OVER SIZE)	1		410	
*	54	12037-01301	SET-RING,PISTON,WITH EXPANDER (0.75MM OVER SIZE)	1		410	
*	55	12038-01302	SET-RING,PISTON (1.0MM OVER SIZE)	1		410	
*	56	12038-01301	SET-RING,PISTON,WITH EXPANDER (1.0MM OVER SIZE)	1		410	
*	57	12039-01302	SET-RING,PISTON (1.25MM OVER SIZE)	1		410	
*	58	12039-01301	SET-RING,PISTON,WITH EXPANDER (1.25MM OVER SIZE)	1		410	
*	59	12040-01302	SET-RING,PISTON (1.50MM OVER SIZE)	1		410	
*	60	12040-01301	SET-RING,PISTON,WITH EXPANDER (1.50MM OVER SIZE)	1		410	

REVISED: SEPTEMBER,1968

Printed in Japan

NOTE

CAMSHAFT & VALVE MECHANISM

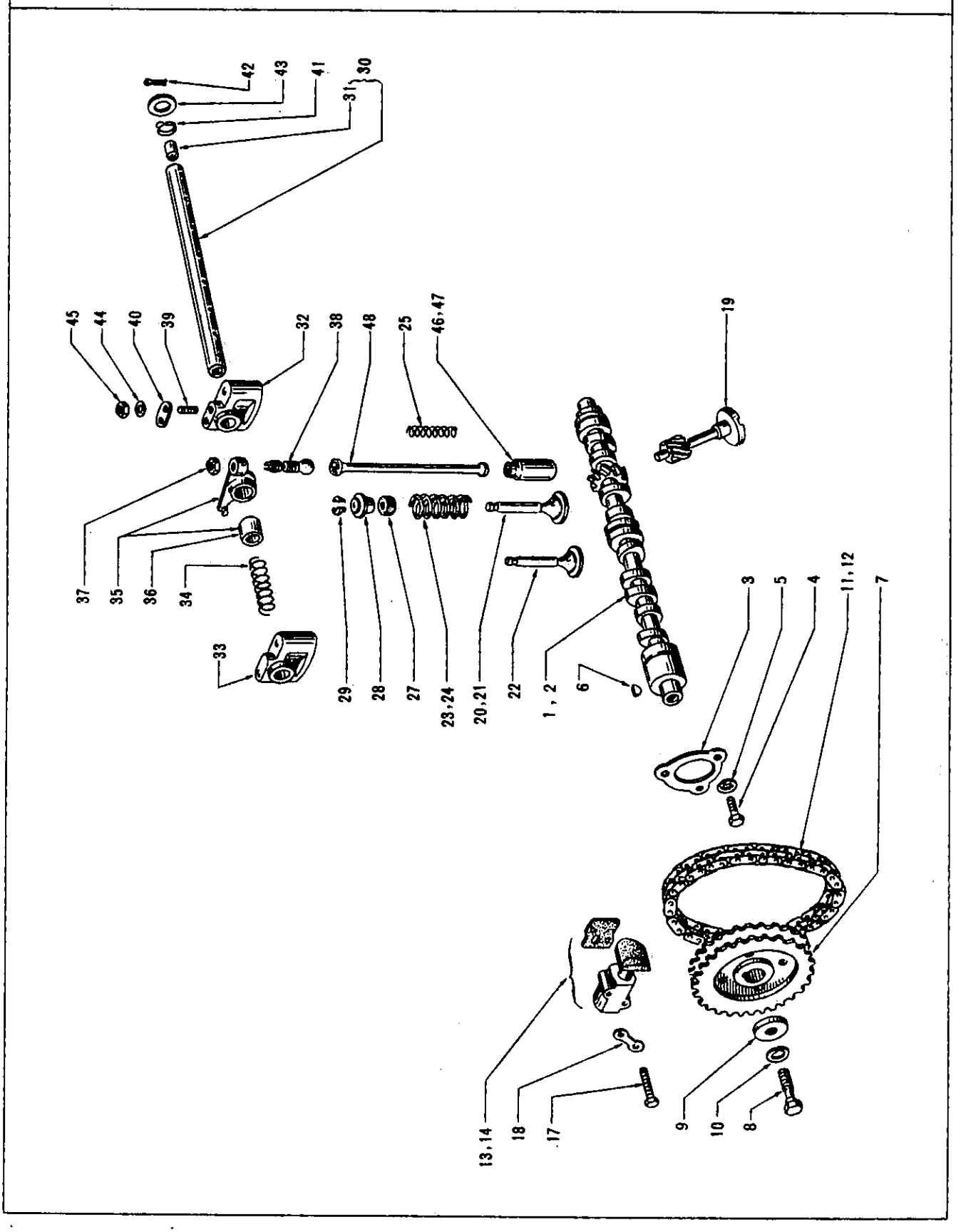

CAM SHAFT & VALVE MECHANISM

S	KEY NO.	PART NO.	PART NAME	Q'TY	SALES UNIT	MODEL	ICA
	1	13001-09500	CAM SHAFT	1		410 (EXC,SS)	
	2	13001-10600	CAM SHAFT	1	1	410 SS	
	3	13010-02701	PLATE-LOCATING,CAM SHAFT	1	1	410	
	4	00114-42010	BOLT TO FIX LOCATING PLATE TO BLOCK	3	10	410	
*	5	00916-11400	WASHER-LOCK TO FIX LOCATING PLATE TO BLOCK	3	50	410	
	6	13032-30000	KEY-CAM SHAFT	1	10	410	
	7	13024-30800	GEAR-CAM SHAFT	1	1	410	
	8	13082-08000	BOLT-CAM SHAFT GEAR	1	10	410	
	9	13030-08000	WASHER-CAM SHAFT	1	100	410	
*	10	00915-11600	WASHER-LOCK	1	50	410	
*	11	13028-31700	ASSY-CHAIN,TIMING	1	1	410	
*	12	13028-10600	ASSY-CHAIN,TIMING	1		410	Y
*	13	13070-09400	ASSY-TENSIONER,CHAIN (SPRING 0.6KG)	1		410	
	14	13070-10600	ASSY-TENSIONER,CHAIN (SPRING 2KG)	1	1	410	Y
*	15	13072-09400	SPRING-CHAIN TENSIONER (3KG)	1	10	410	
	16	13072-10600	SPRING-CHAIN TENSIONER (2KG)	1	10	410	
	17	00114-43810	BOLT TO FIX CHAIN TENSIONER	2	50	410	
*	18	00916-11400	WASHER-LOCK TO FIX CHAIN TENSIONER	1	50	410	

Printed in Japan

REVISED: SEPTEMBER,1968

S	KEY NO.	PART NO.	PART NAME	QTY	SALES UNIT	MODEL	ICA
	19	22175-09400	SPINDLE-DRIVING,DISTRIBUTOR	1		410	
*	20	13201-30800	VALVE-INTAKE	4		410	
	21	13201-10600	VALVE-INTAKE	4	8	410	Y
	22	13202-09600	VALVE-EXHAUST	4	8	410	
	23	13203-32200	SPRING-VALVE (OUTER)	8		410	
	24	13203-08100	SPRING-VALVE (OUTER)	8	10	410	Y
	25	13204-08100	SPRING-VALVE (INNER)	8	10	410	
	26	13205-10600	ASSY-SEAL,OIL,VALVE	8	10	410	
	27	13207-08000	RING-RUBBER,VALVE	8	50	410	
	28	13209-08000	RETAINER-VALVE SPRING	8	20	410	
	29	13209-04100	COLLET-VALVE	16	20	410	
	30	13252-30001	COMP.-SHAFT,VALVE ROCKER	1	2	410	
	31	13254-30001	PLUG-VALVE ROCKER SHAFT	2	50	410	
	32	13249-30001	BRACKET-VALVE ROCKER SHAFT,TAPPED	1	10	410	
	33	13248-30001	BRACKET-VALVE ROCKER SHAFT,PLAIN	3	20	410	
	34	13256-30000	SPRING-VALVE ROCKER SHAFT	3	10	410	
	35	13257-09400	COMP.-VALVE ROCKER	8	5	410	
	36	13260-30000	BUSHING-VALVE ROCKER	8	10	410	
	37	13247-30000	NUT-LOCK,VALVE LIFTER ADJUSTING SCREW	8	5	410	
*	38	13240-30000	SCREW-VALVE LIFTER ADJUSTING	8	10	410	
	39	13262-30000	SCREW-LOCATING,VALVE ROCKER SHAFT	1	10	410	
	40	13261-30000	PLATE-LOCATING SCREW	1	50	410	

Printed in Japan

REVISED: SEPTEMBER,1968

S	KEY NO.	PART NO.	PART NAME	QTY	SALES UNIT	MODEL	ICA
	41	13291-04100	SPRING-VALVE ROCKER	2	50	410	
*	42	00921-22000	PIN-SPLIT,VALVE ROCKER SHAFT	2	100	410	
	43	13279-10600	WASHER-VALVE ROCKER SHAFT	2	10	410	
*	44	00915-41500	WASHER (FOR VALVE ROCKER SHAFT STUD)	3	50	410	
	45	00911-14510	NUT (FOR VALVE ROCKER BRACKET STUD)	6		410	
	46	13231-08001	LIFTER-VALVE	8		410	
	47	13231-08002	LIFTER-VALVE	8	8	410	
	48	13238-04102	ROD-PUSH	8	10	410	

Printed in Japan

REVISED: SEPTEMBER,1968

NOTE

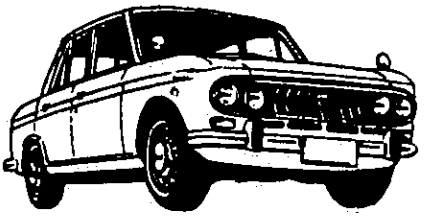

NOTE

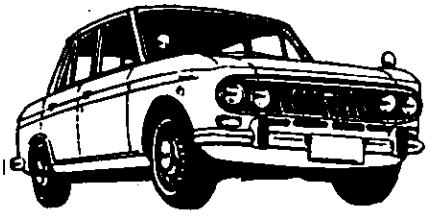

CYLINDER HEAD

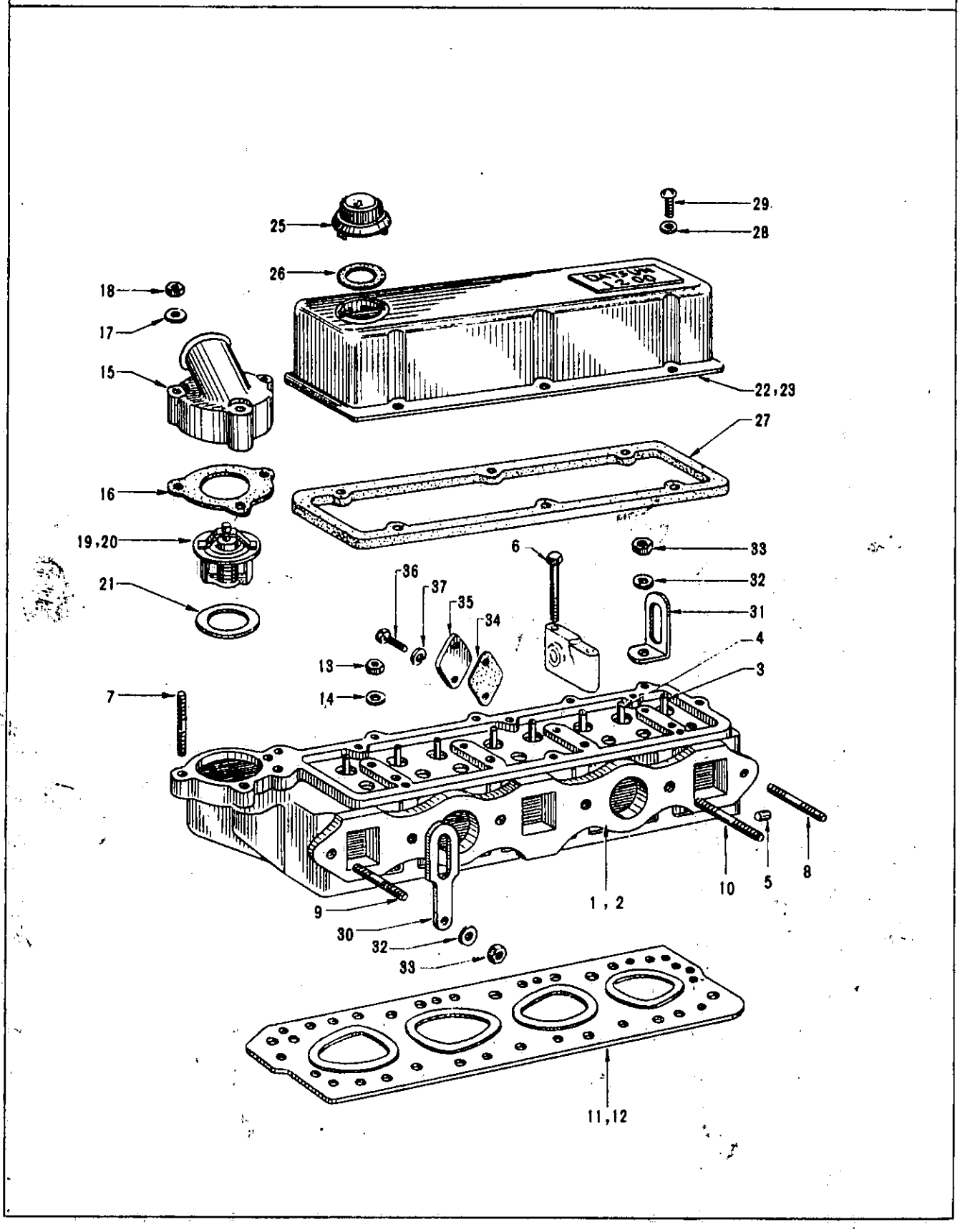

S	KEY NO.	PART NO.	PART NAME	Q'TY	SALES UNIT	MODEL	ICA
			CYLINDER HEAD				
	1	11041-10701	ASSY-HEAD,CYLINDER	1		410 SS	
	2	11041-10601	ASSY-HEAD,CYLINDER	1		410 EXC.SS	
	3	13211-30001	GUIDE-INLET VALVE	4		410	
*	4	13213-30001	GUIDE-EXHAUST VALVE	4	12	410	
	5	11065-30000	PLUG-OIL HOLE	1		410	
	6	00131-57000	BOLT-ROCKER BRACKET	4	50	410	
	7	00214-54010	STUD (TO FIX WATER OUT LET ELBOW	3		410	
	8	00254-52200	STUD TO FIX EXHAUST MA NIFOLD	1	50	410	
	9	00254-52800	STUD TO FIX EXHAUST MA NIFOLD	1		410	
	10	14014-10600	STUD (TO FIX MANIFOLD)	1	10	410	
	11	11044-07200	GASKET-CYLINDER HEAD (COMPRESSION RATIO 8.0)	1	10	410	
*	12	11044-04000	GASKET-CYLINDER HEAD (COMPRESSION RATIO 7.6)	1	10	410	
*	13	11058-10600	WASHER FOR CYLINDER HE AD STUD	11	10	410	
	14	11059-30000	NUT FOR CYLINDER HEAD STUD	11	5	410	
	15	11060-10600	ELBOW-WATER OUTLET	1	1	410	
	16	11062-30000	WASHER-JOINT,WATER OUT LET ELBOW	1	10	410	
	17	00915-41510	WASHER TO FIX WATER OU TLET ELBOW	3		410	
	18	00911-14510	NUT TO FIX WATER OUTLE T ELBOW	3		410	

FIG. 5

NISSAN MOTOR CO., LTD.

S	KEY NO.	PART NO.	PART NAME	Q'TY	SALES UNIT	MODEL	ICA
	19	21200-61000	ASSY-THERMOSTAT	1	10	410	
	20	21200-61001	ASSY-THERMOSTAT (FOR THE FRIGID ZONE)	1		UP 410	
	21	21207-30000	WASHER-JOINT,THERMOSTAT	1		410	
*	22	13264-10600	ASSY-COVER,VALVE ROCKER (DATSUN)	1		410	
*	23	13264-10801	ASSY-COVER,VALVE ROCKER (NISMO)	1	10	410	
	24	13255-10600	ASSY-FILLER,OIL	1		410	
*	25	15255-10650	ASSY-FILLER,OIL	1	5	410	Y
*	26	15270-36700	PACKING,OIL FILLER	1	20	410	
*	27	13273-10600	PACKING-VALVE ROCKER COVER	1	10	410	
*	28	00915-11400	WASHER-LOCK	6	50	410	
	29	00311-41410	SCREW	6	50	410	
*	30	10005-10600	SLINGER-ENGINE,FRONT	1	1	410	
	31	10006-32200	SLINGER-ENGINE,REAR	1	1	410	
	32	00915-41510	WASHER	2		410	
	33	00911-14510	NUT	2		410	
	34	15061-30000	WASHER-JOINT	1	20	410	
	35	11066-30000	PLATE-COVER,HEATER OUTLET HOLE	1	1	410	
	36	00114-41210	SCREW TO FIX COVER PLATE	2		410	
*	37	00915-21400	WASHER TO FIX COVER PLATE	2	50	410	

REVISED: SEPTEMBER,1968

Printed in Japan

NOTE

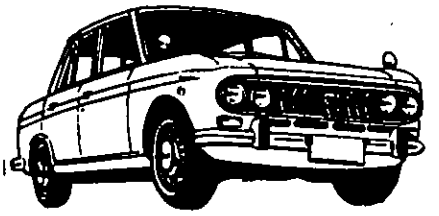

MANIFOLD

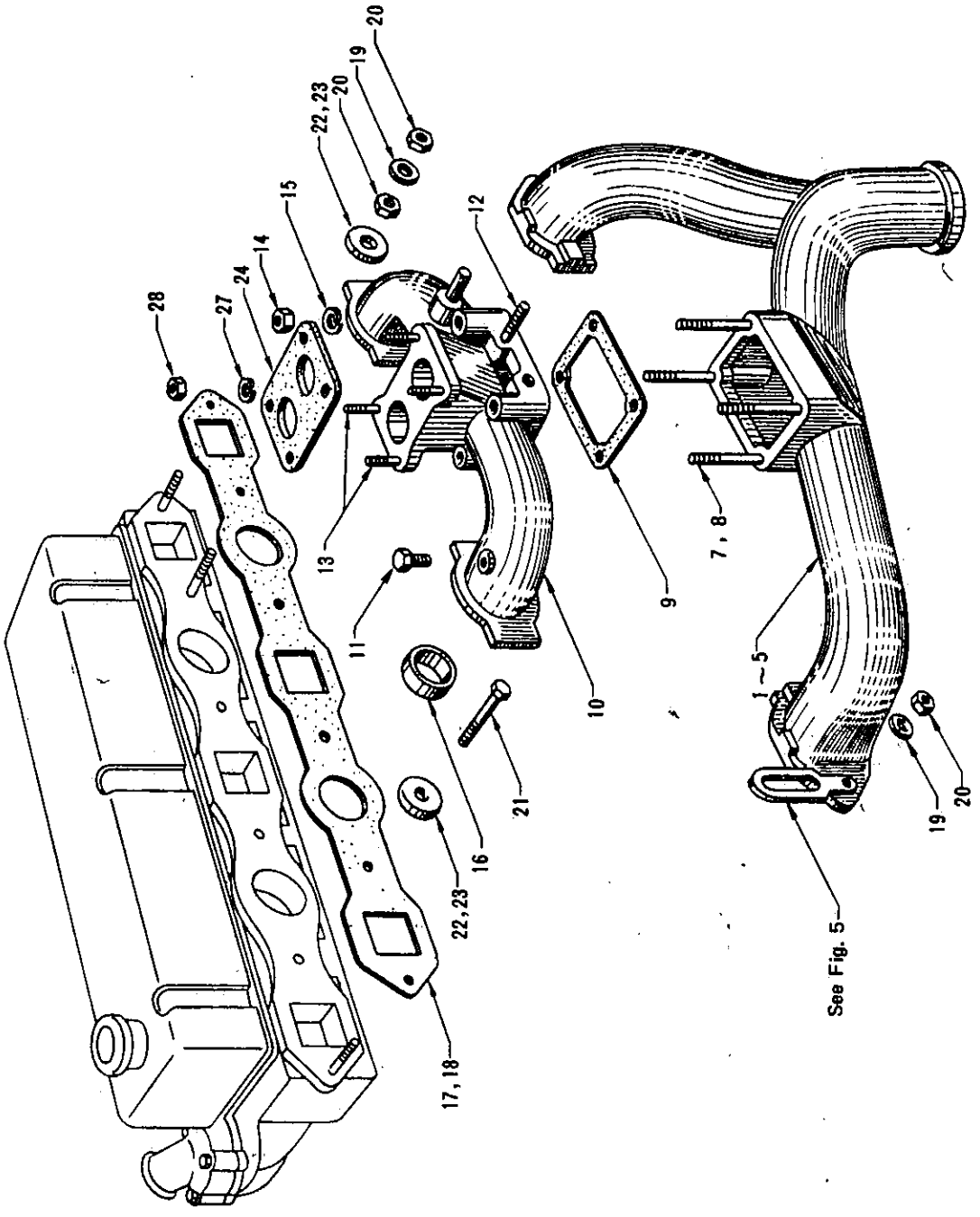
20
19
20
22, 23
15
14
24
27
28
12
13
11
21
16
22, 23
17, 18
10
9
7, 8
1 ~ 5
See Fig. 5
19
20

S	KEY NO.	PART NO.	PART NAME	Q'TY	SALES UNIT	MODEL	ICA
			MANIFOLD				
	1	14004-10700	MANIFOLD-EXHAUST	1	1	410(EXC.SS)	
	2	14001-10601	ASSY-MANIFOLD,INTAKE & EXHAUST	1	1	SS 410	
	3	14005-10600	GASKET-INTAKE TO EXHAUST MANIFOLD	1	10	SS 410	
*	4	14004-10601	MANIFOLD-EXHAUST	1		SS 410	
	5	14003-10601	MANIFOLD-INTAKE	1	1	SS 410	
	6	00214-52000	STUD (TO FIX EXHAUST TUBE)	3	50	SS 410	
	7	00214-44510	STUD (INTAKE TO EXHAUST MANIFOLD)	4	50	410(EXC.SS)	
	8	00214-52510	STUD (TO FIX MANIFOLD)	4		SS 410	
	9	14033-30000	WASHER-HOT SPOT	1	10	410	
*	10	14003-10600	MANIFOLD-INTAKE	1	1	410	
	11	00931-30200	PLUG	1	50	410	
	12	00214-41410	STUD (TO FIX AIR CLEANER SUPPORT)	2		410	
	13	00214-52800	STUD (CARBURETOR TO INTAKE MANIFOLD)	4	50	410	
	14	00911-14410	NUT	4		410	
*	15	00915-11400	WASHER-LOCK	4	50	410	
	16	14034-08000	COLLAR-INTAKE MANIFOLD	2	1	410	
	17	14035-08000	GASKET-MANIFOLD TO CYLINDER HEAD	1	10	410(EXC.SS)	
	18	14035-13200	GASKET-MANIFOLD TO CYLINDER HEAD	1	10	SS 410	

Printed in Japan

REVISED: SEPTEMBER,1968

S	KEY NO.	PART NO.	PART NAME	Q'TY	SALES UNIT	MODEL	ICA
*	19	00915-41500	WASHER TO FIX EXHAUST MANIFOLD TO CYLINDER HEAD	2	50	410	
	20	00911-14510	NUT TO FIX EXHAUST MANIFOLD TO CYLINDER HEAD	3		410	
	21	00124-53010	SCREW-SET,(INTAKE & EXHAUST MANIFOLD TO CYLINDER HEAD)	3	50	410	
*	22	14037-08000	YOKE-MANIFOLD	4	10	410	
	23	14037-30800	YOKE-MANIFOLD	4	50	410(EXC.SS)	
	24	16174-31301	GASKET-INSULATING,CARBURETOR	1	10	410	
	25	16174-12203	INSULATOR-MANIFOLD TO CYLINDER HEAD	2		SS 410	
	26	16174-10600	INSULATOR-MANIFOLD TO CYLINDER HEAD	2	10	SS 410	N
*	27	00915-41500	WASHER-LOCK TO FIX CARBURETOR	4	50	410	
	28	00911-14510	NUT TO FIX CARBURETOR	4		410	
	29	14330-10602	PLATE-HEAT SHIELD	1	10	SS 410	
	30	16175-10601	GASKET-INSULATOR	2	10	SS 410	

REVISED: SEPTEMBER,1968

Printed in Japan

NOTE

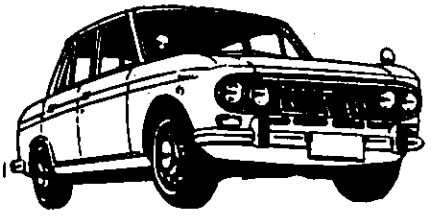

OIL PUMP (TO E/# E1-547143)

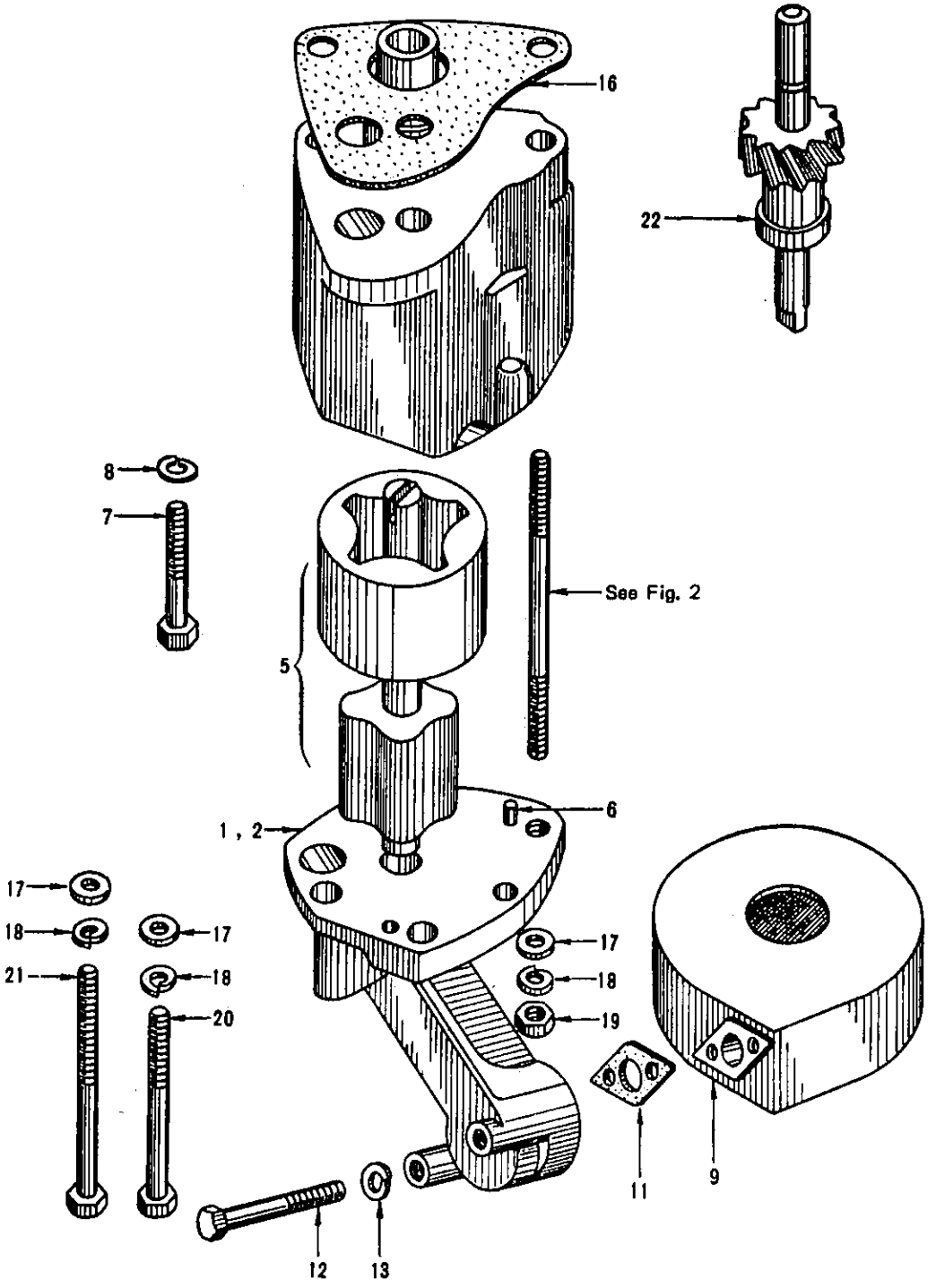

OIL PUMP (TO E/# E1-547143)

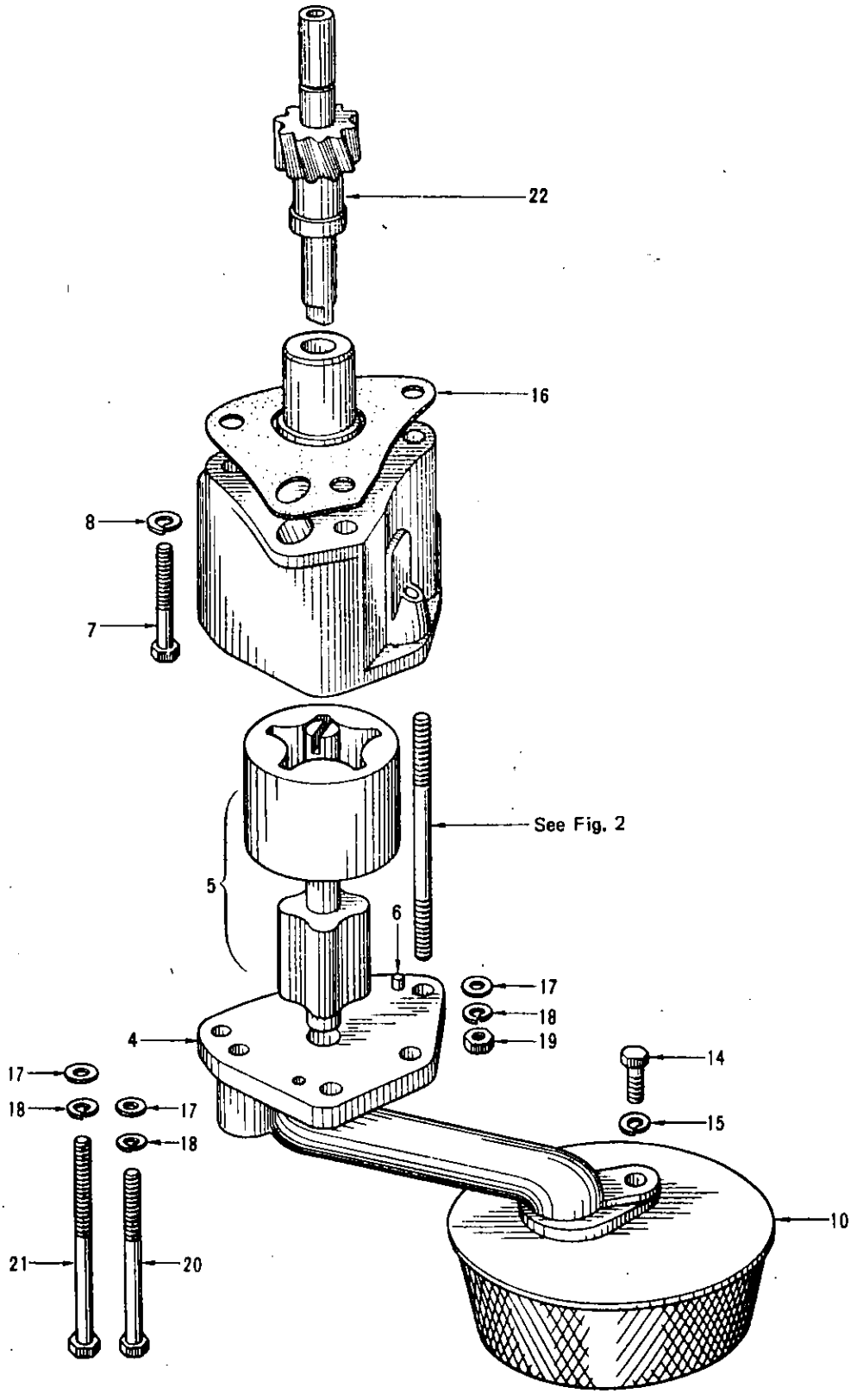

S	KEY NO.	PART NO.	PART NAME	Q'TY	SALES UNIT	MODEL	ICA
			OIL PUMP (TO E/# E1-547143)				
	1	15000-10600	ASSY-OIL PUMP,WITH STRAINER (UP TO E/# E1-409869)	1		410	
	2	15000-10601	ASSY-OIL PUMP,WITH STRAINER (FROM E/# E1-409870)	1		410	Y
	3	15015-30000	COVER-OIL PUMP (UP TO E/# E1-409869)	1	1	410	
	4	15015-10600	COVER-OIL PUMP (FROM E/# E1-409870)	1	1	410	C
	5	15038-10625	KIT-GEAR,DRIVE & DRIVEN	1	1	410	
	6	15019-30100	PIN-DOWEL,BODY TO COVER	2	10	410	
	7	00111-42210	BOLT TO FIX PUMP COVER	2		410	
*	8	00915-11400	WASHER-LOCK TO FIX PUMP COVER	2	50	410	
	9	15050-10600	ASSY-STRAINER,OIL (UP TO E/# E1-409869)	1	1	410	
	10	15050-12200	ASSY-STRAINER,OIL (FROM E/# E1-409870)	1	1	410	C
	11	15061-30000	GASKET (OIL STRAINER TO PUMP)(UP TO E/# E1-409869)	1	20	410	
	12	00114-43810	SCREW TO FIX OIL STRAINER (15050-10600)	2		410	
*	13	00915-11400	WASHER-LOCK TO FIX OIL STRAINER (15050-10600)	2	50	410	
*	14	00111-42000	BOLT TO FIX OIL STRAINER (15050-12200).	1	100	410	

Printed in Japan

REVISED: SEPTEMBER,1968

S	KEY NO.	PART NO.	PART NAME	Q'TY	SALES UNIT	MODEL	ICA
*	15	00915-11400	WASHER-LOCK TO FIX OIL STRAINER (15050-12200)	1	50	410	
	16	15066-30000	GASKET (OIL PUMP TO CYLINDER BLOCK)	1	50	410	
	17	15071-30800	WASHER-PLAIN TO FIX OIL PUMP TO CYLINDER BLOCK	3	10	410	
*	18	00915-21500	WASHER-LOCK TO FIX OIL PUMP TO CYLINDER BLOCK	3	50	410	
*	19	00911-14500	NUT TO FIX OIL PUMP TO CYLINDER BLOCK	1	100	410	
	20	15036-09400	BOLT TO FIX OIL PUMP TO CYLINDER BLOCK	1	10	410	
	21	15037-09400	BOLT TO FIX OIL PUMP TO CYLINDER BLOCK	1	10	410	
	22	15040-10600	ASSY-SPINDLE,DRIVING,OIL PUMP	1	1	410	

NOTE

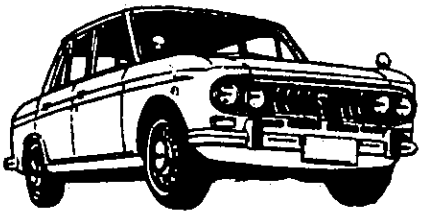

NOTE

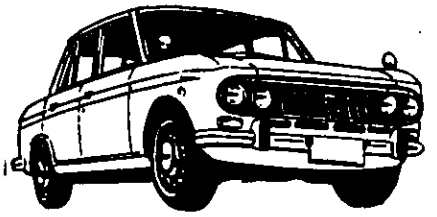

OIL PUMP (FROM E/# E1-547144)

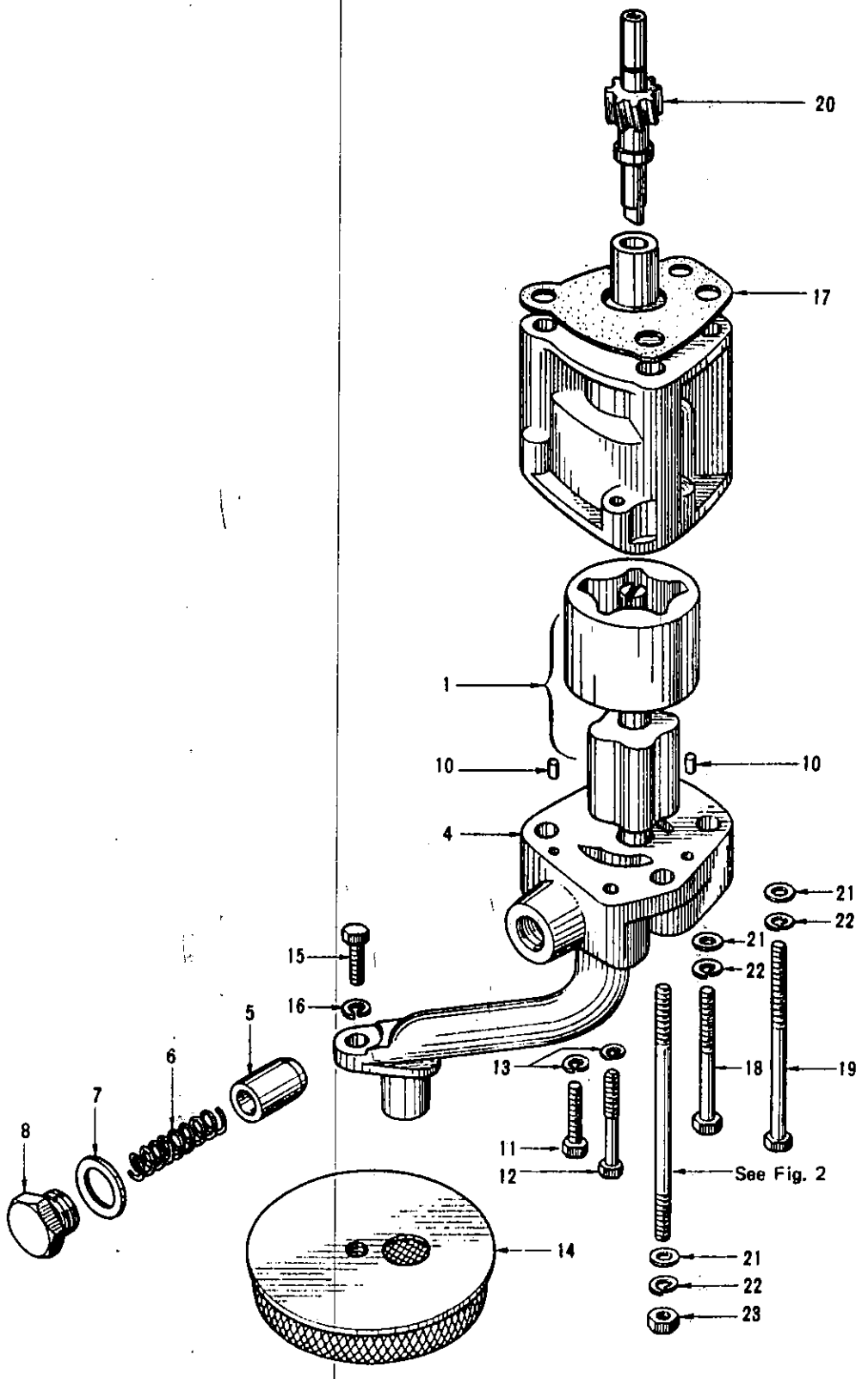

OIL PUMP (FROM E/# E1-547144)

S	KEY NO.	PART NO.	PART NAME	Q'TY	SALES UNIT	MODEL	ICA
	1	15000-10602	ASSY-OIL PUMP,WITH STRAINER (FROM E/# E1-547144)	1		410	
	2	15038-10625	KIT-GEAR,DRIVE & DRIVEN	1	1	410	
	3	15051-10601	ASSY-COVER,OIL PUMP	1	1	410	
	4	15015-10601	COVER-OIL PUMP	1	1	410	
	5	15132-09400	VALVE-OIL REGULATOR	1	10	410	
*	6	15133-10602	SPRING-VALVE,OIL REGULATOR	1	10	410	
	7	15136-10601	WASHER-OIL REGULATOR CAP NUT	1	10	410	
	8	15134-10602	NUT-CAP,VALVE SPRING	1	5	410	
	9	15137-10600	SHIM-OIL REGULATOR	AR	10	410	
	10	15019-30100	PIN-DOWEL,BODY TO COVER	2	10	410	
	11	00111-42210	BOLT TO FIX PUMP COVER	1		410	
*	12	00111-44000	BOLT TO FIX PUMP COVER	1	1	410	
*	13	00915-11400	WASHER-LOCK TO FIX PUMP COVER	2	50	410	
	14	15050-12200	ASSY-STRAINER,OIL	1	1	410	
*	15	00111-42000	BOLT TO FIX OIL STRAINER	1	100	410	
*	16	00915-11400	WASHER-LOCK TO FIX OIL STRAINER	1	50	410	
	17	15066-30000	GASKET (OIL PUMP TO CYLINDER BLOCK)	1	50	410	
	18	15036-10600	BOLT	1	10	410	

Printed in Japan

REVISED: SEPTEMBER,1968

FIG. 8

NISSAN MOTOR CO., LTD.

S	KEY NO.	PART NO.	PART NAME	Q'TY	SALES UNIT	MODEL	ICA
	19	15037-09400	BOLT	1	10	410	
	20	15040-10600	ASSY-SPINDLE,DRIVING,OIL PUMP	1	1	410	
	21	15071-30800	WASHER-PLAIN	3	10	410	
*	22	00915-21500	WASHER-LOCK	3	50	410	
*	23	00911-14500	NUT	1	100	410	

REVISED: SEPTEMBER,1968

Printed in Japan

NOTE

OIL FILTER

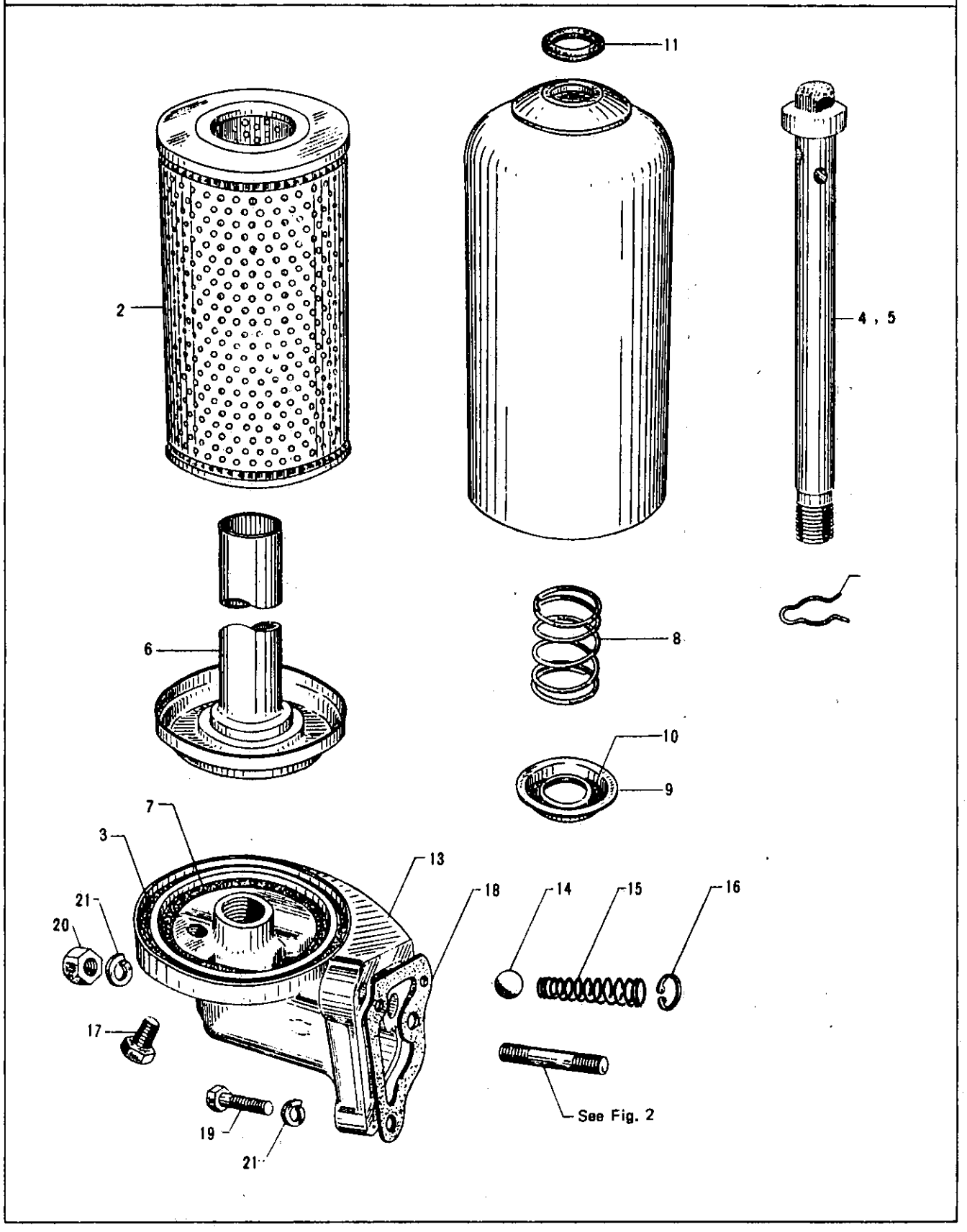

S	KEY NO.	PART NO.	PART NAME	Q'TY	SALES UNIT	MODEL	ICA
			OIL FILTER				
	1	15200-09400	ASSY-FILTER,OIL	1	1	410	
	2	15208-32225	ASSY-ELEMENT,OIL FILTER (WITH GASKET)	1		410	
	3	15223-30100	GASKET-OIL FILTER BODY	1	10	410	
	4	15213-09400	ASSY-SHAFT,CENTER	1	2	410	
	5	15213-09401	ASSY-SHAFT,CENTER	1	10	410	N
	6	15229-09400	ASSY-SEAT,ELEMENT	1	50	410	
	7	15226-09400	GASKET-ELEMENT SEAT	1	10	410	
	8	15224-43800	SPRING-ELEMENT SETTING	1	10	410	
	9	15227-43800	RETAINER-ELEMENT	1	10	410	
	10	15228-43800	O RING-RETAINER	1	10	410	
	11	15230-43800	GASKET-FILTER BODY TOP	1	10	410	
	12	15230-44000	PACKING	1	10	410	N
	13	15238-09400	BRACKET-OIL FILTER	1	1	410	
	14	15300-32200	VALVE-SAFETY (STEEL BALL)	1	5	410	
	15	15301-32200	SPRING-SAFETY VALVE	1	10	410	
	16	15302-32201	RING-SNAP	1		410	
	17	00931-30200	PLUG-TAPER THREAD	1	50	410	
*	18	15239-09400	GASKET (OIL FILTER TO CYLINDER BLOCK)	1	10	410	
	19	00911-63000	BOLT TO FIX OIL FILTER	2		410	
*	20	00911-14600	NUT TO FIX OIL FILTER	1	100	410	
*	21	00915-11600	WASHER-LOCK TO FIX OIL FILTER	3	50	410	

Printed in Japan

REVISED: SEPTEMBER,1968

NOTE

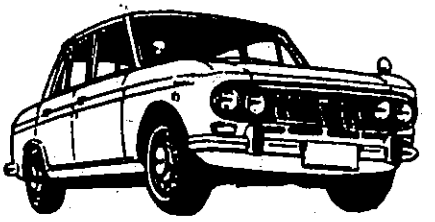

NOTE

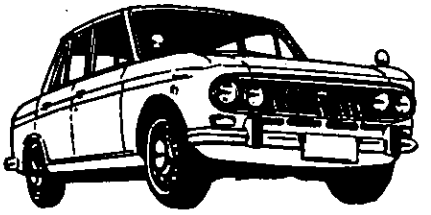

CARBURETOR (NIKKI)

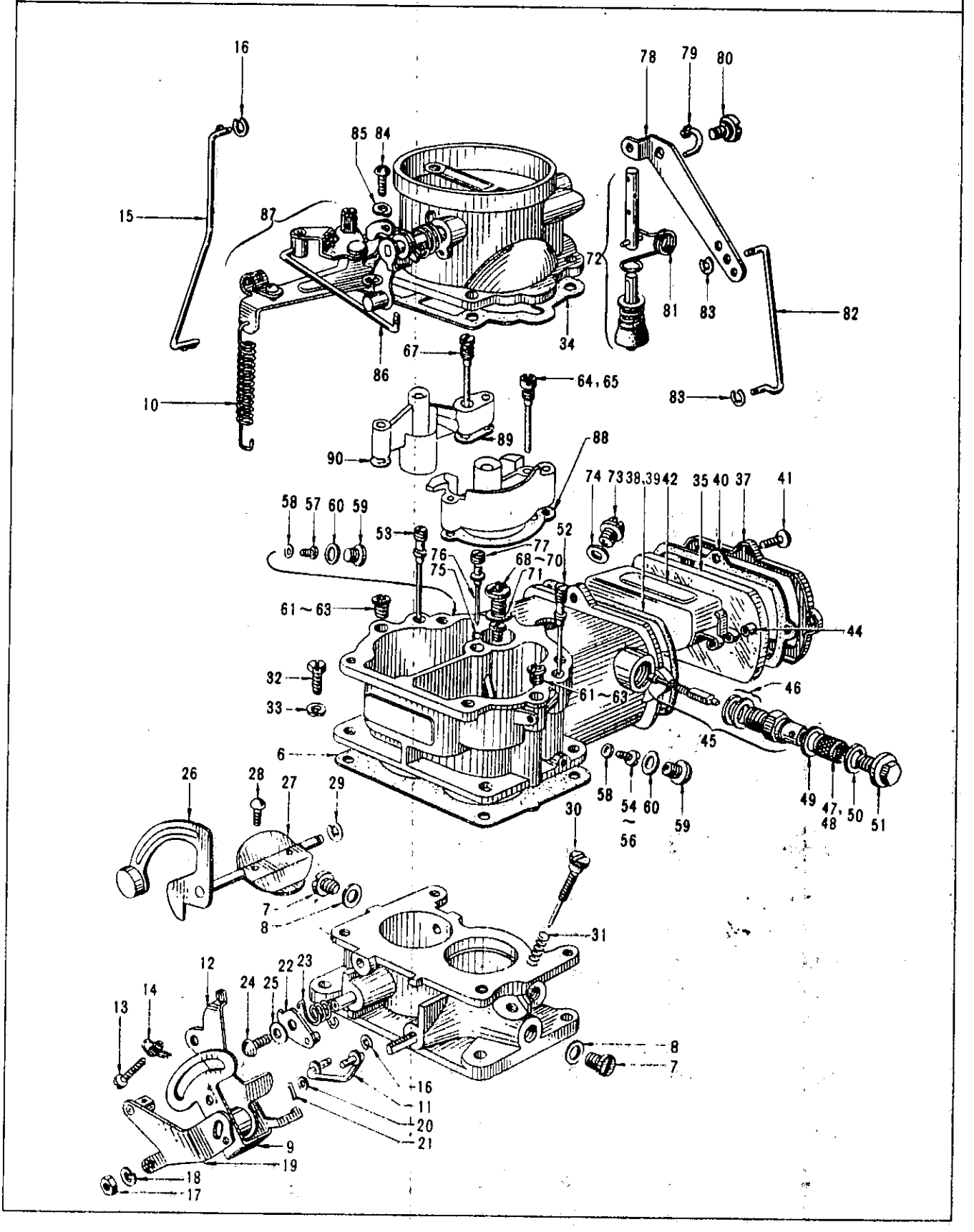

S	KEY NO.	PART NO.	PART NAME	Q'TY	SALES UNIT	MODEL	ICA
			CARBURETOR (NIKKI)				
*	1	16010-10600	ASSY-CARBURETOR (2D-30 CE)	1		410 P CLUTCH	
*	2	16010-10604	ASSY-CARBURETOR (2D-30 CE-2)	1	1	410 P CLUTCH	Y
	3	16010-10606	ASSY-CARBURETOR	1	1	410 P CLUTCH	Y
*	4	16010-10601	ASSY-CARBURETOR (2D-30 CF)	1		410 A CLUTCH	
	5	16010-10605	ASSY-CARBURETOR (2D-30 CF-2)	1	1	410 A CLUTCH	Y
	6	16117-31300	GASKET-FLANGE	1		410	
	7	16031-31300	PLUG-SLOW PORT	2	1	410	
	8	16078-31300	GASKET-PLUG,SLOW PORT	2		410	
	9	16277-08100	ASSY-ARM,THROTTLE (P)	1		410	
	10	16160-36900	SPRING-RETURN,THROTTLE LEVER	1	10	410	
	11	16140-31300	LINK-THROTTLE (P)	1	10	410	
	12	16133-10600	ASSY-LEVER,STARTING THROTTLE	1	1	410	
	13	16114-31300	SCREW-ADJUSTING,THROTTLE	1	10	410	
	14	16193-31300	SPRING-THROTTLE,ADJUSTING SCREW	1	10	410	
	15	16248-10600	ROD-CONNECTING	1	5	410	
	16	16156-31300	RING-E,STOP	5	10	410	
	17	16124-31300	NUT	1	1	410	
	18	16126-31300	WASHER	1	10	410	

Printed in Japan

REVISED: SEPTEMBER,1968

S	KEY NO.	PART NO.	PART NAME	Q'TY	SALES UNIT	MODEL	ICA
	19	16192-10600	ASSY-LEVER,THROTTLE (P)	1	1	410	
	20	16215-31300	WASHER	1		410	
	21	16091-31300	PIN-COTTER	1	10	410	
	22	16280-31300	ASSY-ARM,THROTTLE (S)	1	5	410	
	23	16160-30800	SPRING-RETURN,THROTTLE (S)	1	5	410	
	24	16121-31300	SCREW	1	10	410	
	25	16072-31300	WASHER	1	50	410	
	26	16291-08100	ASSY-SHAFT,AUXILIARY	1	2	410	
	27	16093-08100	VALVE-AUXILIARY	1		410	
	28	16131-31300	SCREW-SET,VALVE	1	10	410	
	29	16086-31301	RING-E,STOP	1	10	410	
	30	16144-31300	SCREW-IDLE ADJUSTING	1	10	410	
	31	16145-31301	SPRING-IDLE ADJUSTING SCREW	1	10	410	
	32	16137-34200	SCREW-SET,FLANGE	4	50	410	
	33	16217-31300	WASHER	4		410	
	34	16109-31300	GASKET-BODY	1	10	410	
*	35	16125-31301	COVER-FLOAT CHAMBER	1	5	410	
	36	16125-10604	COVER-FLOAT CHAMBER	1	10	410	C
	37	16063-31300	HOLDER-COVER,FLOAT	1	5	410	
	38	16064-31300	GASKET-COVER,FLOAT (A)	1	10	410	
	39	16064-11200	GASKET-COVER,FLOAT (A)	1	10	410	C
	40	16079-31301	GASKET-COVER,FLOAT (B)	1	10	410	
	41	16214-31301	SCREW	4	10	410	
*	42	16061-31300	ASSY-FLOAT	1	10	410	
	43	16061-10600	ASSY-FLOAT	1	2	410	N

Printed in Japan

REVISED: SEPTEMBER,1968

S	KEY NO.	PART NO.	PART NAME	Q'TY	SALES UNIT	MODEL	ICA
	44	16062-31300	COLLAR-FLOAT PIN	1	1	410	
	45	16092-31300	KIT-VALVE,FLOAT NEEDLE	1	10	410	
	46	16060-31300	GASKET-NEEDLE VALVE	4		410	
	47	16098-31300	ASSY-STRAINER	1	10	410	
	48	16098-10600	ASSY-STRAINER	1	10	410	N
	49	16094-31300	GASKET-BANJO,UNION (A)	1	10	410	
	50	16049-31300	GASKET-BANJO,UNION (B)	1	10	410	
	51	16108-31300	BOLT-UNION	1	10	410	
	52	16053-31300	ASSY-JET,SLOW	2	10	410	
	53	16036-08100	ASSY-JET,MAIN AIR BLEED (S)	1	10	410	
	54	16035-49801	JET-MAIN (P) #98	1	10	410	
	55	16033-32200	JET-MAIN (P) #96 (2D-30CE-2 & 2D-30CF-2)	1	10	410	N
	56	16035-49801	JET-MAIN (P) #98	1	10	410	N
	57	16054-32200	JET-MAIN (S)	1	10	410	
	58	16103-31301	GASKET-MAIN JET	2		410	
	59	16272-31300	PLUG-MAIN	2		410	
	60	16191-31301	GASKET-MAIN JET PLUG	2	10	410	
	61	16052-08103	JET-STEP,AIR BLEED #160	1	10	410	
	62	16204-10600	JET-STEP,AIR BLEED #120 (2D-30CE-2 & 2D-30CF-2)	1	10	410	N
	63	16052-08103	JET-STEP,AIR BLEED #160	1	10	410	N
	64	16310-08103	ASSY-JET,MAIN AIR BLEED (P) #60	1		410	
*	65	16310-08103	ASSY-JET,MAIN AIR BLEED (P) #80 (2D-30CE-2 & 2D-30CF-2)	1		410	N

REVISED: SEPTEMBER,1968

Printed in Japan

S	KEY NO.	PART NO.	PART NAME	Q'TY	SALES UNIT	MODEL	ICA
	66	16310-08103	ASSY-JET,MAIN AIR BLEED (P) #60	1		410	N
	67	16204-08100	JET-SLOW,AIR BLEED #220	1	10	410	
	68	16101-31300	ASSY-VALVE,POWER JET #50	1	10	410	
	69	16101-32200	ASSY-VALVE,POWER JET #55 (2D-30CE-2 & 2D-30CF-2)	1	5	410	N
	70	16101-31300	ASSY-VALVE,POWER JET #50	1	10	410	N
	71	16076-31301	GASKET-POWER JET	1	10	410	
	72	16138-32200	ASSY-PLUNGER,PUMP	1	5	410	
	73	16175-08100	ASSY-VALVE,CHECK	1	10	410	
	74	16176-31301	GASKET-VALVE,CHECK	1		410	
	75	16219-31300	VALVE-PUMP	1	10	410	
	76	16285-31300	WEIGHT-PUMP VALVE	1	50	410	
	77	16286-31300	PLUG-PUMP	1	10	410	
	78	16195-10600	ARM-PUMP	1	1	410	
	79	16143-32200	LINK-PUMP ARM	1	10	410	
	80	16185-31300	SCREW-SET,PUMP ARM	1	10	410	
	81	16071-31301	SPRING-RETURN	1	10	410	
	82	16081-10600	ROD-CONNECTING	1	5	410	
	83	16292-31300	RING-E,STOP	2	1	410	
	84	16065-32201	SCREW	4	50	410	
	85	16029-31300	WASHER	4		410	
	86	16141-08100	ROD-CONNECTING	1	1	410	
	87	16165-10600	ASSY-HOLDER,CHOKE WIRE	1		410	
	88	16196-08100	GASKET-SMALL,VENTURI (P)	1	10	410	

Printed in Japan

REVISED: SEPTEMBER,1968

S	KEY NO.	PART NO.	PART NAME	Q'TY	SALES UNIT	MODEL	ICA
	89	16130-31300	GASKET-VENTURI (A)	1		410	
	90	16015-31300	GASKET-VENTURI (B)	1	10	410	

Printed in Japan

REVISED: SEPTEMBER, 1968

NOTE

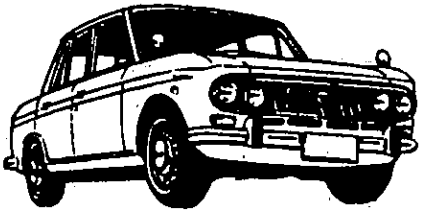

NOTE

CARBURETOR (TWIN) (SS)

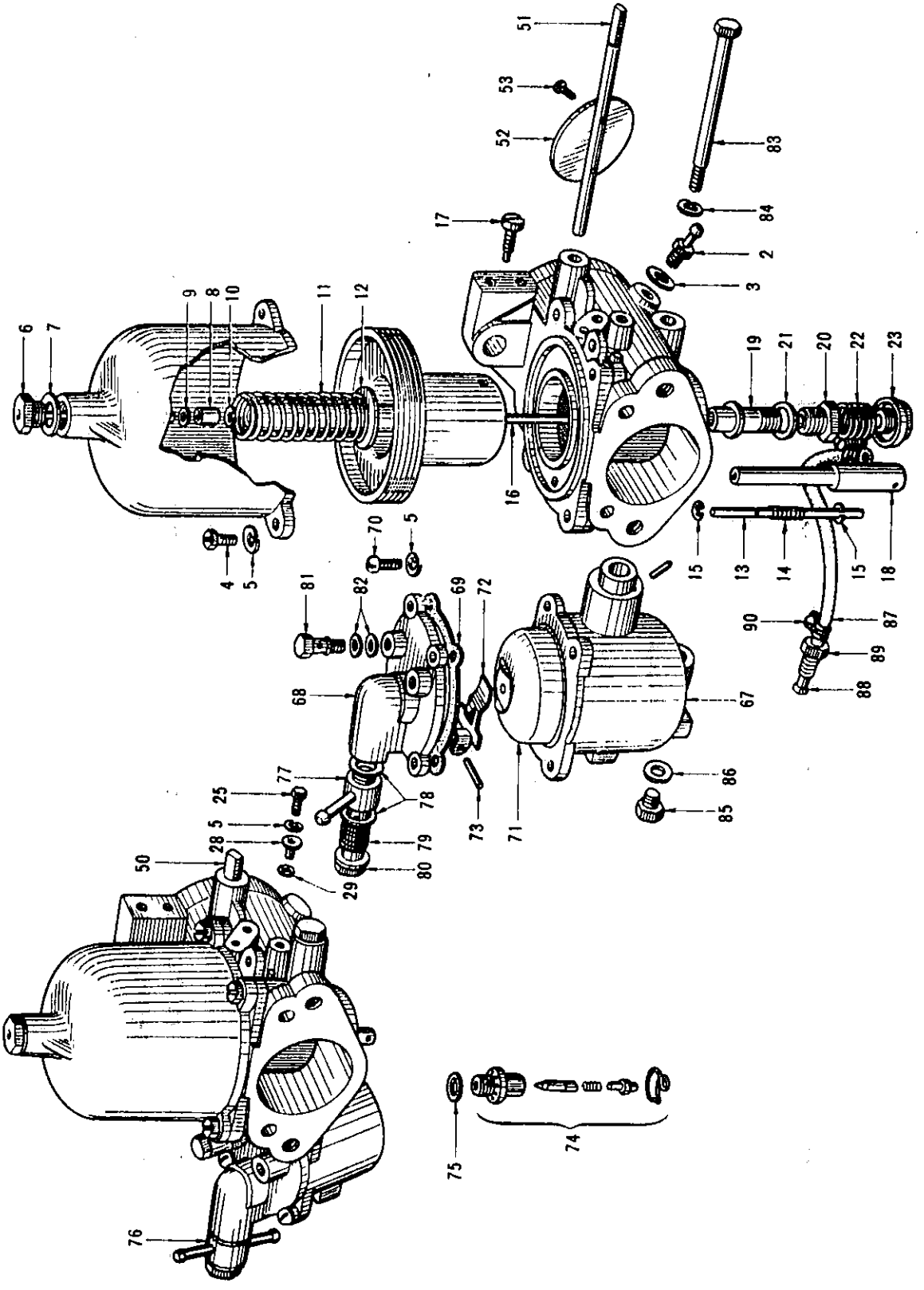

CARBURETOR (TWIN) (SS)

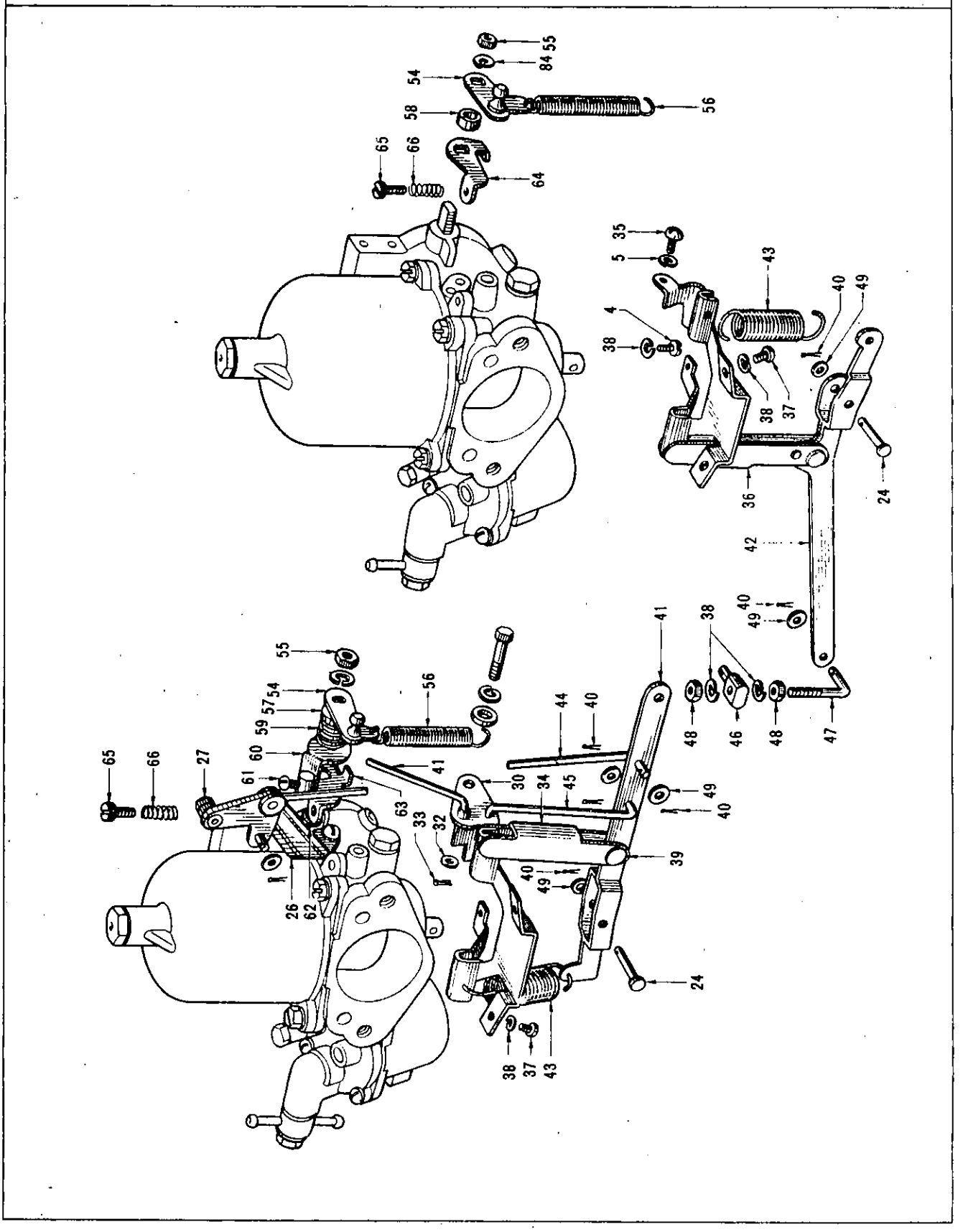

S	KEY NO.	PART NO.	PART NAME	Q'TY	SALES UNIT	MODEL	ICA
			CARBURETOR (TWIN) (SS)				
	1	16010-10615	ASSY-CARBURETOR,TWIN (HJE38W-1)	1		SS 410	
	2	16337-12210	NIPPLE-VACUUM	1		SS 410	
	3	16216-01300	PACKING	1	10	SS 410	
	4	16185-10560	BOLT	8	10	SS 410	
	5	23502-30000	WASHER-LOCK	19	10	SS 410	
*	6	16341-10400	NUT-OIL CAP	2	10	SS 410	
	7	16342-10400	PACKING	2	5	SS 410	
	8	16343-12210	PLUNGER-OIL DAMPER	2	5	SS 410	
	9	16344-10400	WASHER-OIL DAMPER	2	10	SS 410	
	10	16345-10400	RING-C	2	5	SS 410	
	11	16346-10615	SPRING-SUCTION	2	5	SS 410	
	12	16347-10400	PACKING-NYLON	2	10	SS 410	
	13	16324-12210	LIFTER-PISTON	2	5	SS 410	
	14	16325-10400	SPRING-LIFTER	2	10	SS 410	
	15	16326-10400	RING-E	4	5	SS 410	
	16	16354-12210	JET-NEEDLE	2	10	SS 410	
	17	16219-10400	SCREW-SET,JET NEEDLE	2	10	SS 410	
	18	16355-12210	NOZZLE	2	10	SS 410	
	19	16351-10400	SLEEVE-NOZZLE	2	10	SS 410	
	20	16027-10400	SCREW-SET,NOZZLE SLEEV E	2	10	SS 410	
	21	16130-10400	WASHER	2	10	SS 410	
	22	16145-10400	SPRING-IDLE ADJUST SCR EW	2	10	SS 410	

REVISED: SEPTEMBER,1968

Printed in Japan

S	KEY NO.	PART NO.	PART NAME	Q'TY	SALES UNIT	MODEL	ICA
	23	16144-12210	NUT-IDLE ADJUST	2	10	SS 410	
	24	16226-12210	PIN	2	20	SS 410	
	25	16185-12310	BOLT	1	10	SS 410	
	26	16238-12310	LEVER-STARTER	1	1	SS 410	
	27	16164-85060	BOLT	1	1	SS 410	
	28	16116-12310	SLEEVE	1	1	SS 410	
	29	16072-08110	WASHER	1	1	SS 410	
	30	16082-10615	LEVER-CONNECTING	1	10	SS 410	
	31	16248-12210	ROD-CONNECTING	1	5	SS 410	
	32	16215-10400	WASHER	1	10	SS 410	
	33	16091-10560	PIN-COTTER	7	10	SS 410	
	34	16385-12210	BRACKET-FRONT	1		SS 410	
	35	16065-25661	SCREW	3	50	SS 410	
	36	16386-10615	BRACKET-REAR	1	1	SS 410	
	37	16185-35010	SCREW	6		SS 410	
	38	22156-85060	WASHER-LOCK	8	10	SS 410	
	39	16135-12210	PIN	2	10	SS 410	
	40	16226-58000	PIN-COTTER	4	10	SS 410	
	41	16381-10615	LEVER-STARTER (F)	1		SS 410	
	42	16382-10615	LEVER-STARTER (R)	1	5	SS 410	
	43	16352-12210	SPRING-RETURN,STARTER	2	1	SS 410	
	44	16143-10615	ROD-CONNECTING	1	10	SS 410	
	45	16081-12210	ROD-CONNECTING (B)	1	5	SS 410	
	46	16383-12210	ROD-CONNECTING	1		SS 410	
	47	16384-12210	ROD-CONNECTING	1	5	SS 410	
	48	23149-58400	NUT	2	1	SS 410	

Printed in Japan

REVISED: SEPTEMBER,1968

S	KEY NO.	PART NO.	PART NAME	QTY	UNIT	MODEL	ICA
*	49	23190-30000	WASHER	8		SS 410	
	50	16276-12210	SHAFT-THROTTLE (F)	1	1	SS 410	
	51	16122-12210	SHAFT-THROTTLE (R)	1	5	SS 410	
	52	16120-10400	VALVE-THROTTLE	2	10	SS 410	
	53	16121-85160	SCREW	4	10	SS 410	
	54	16134-10616	LEVER-THROTTLE	2	5	SS 410	
	55	16124-85060	NUT	2	10	SS 410	
	56	16194-10615	SPRING-THROTTLE	2	5	SS 410	
	57	16306-12210	PIECE-DISTANT (F)	1	10	SS 410	
	58	16123-12210	PIECE-DISTANT (R)	1	1	SS 410	
	59	16190-12210	SPRING-THROTTLE	1	10	SS 410	
	60	16277-12210	LEVER-IDLE FAST	1	5	SS 410	
	61	23335-85060	SCREW	1	100	SS 410	
	62	16084-58000	WASHER	1	10	SS 410	
	63	16127-12210	PLATE-ADJUST THROTTLE (F)	1	1	SS 410	
	64	16327-12210	PLATE-ADJUST THROTTLE (R)	1	1	SS 410	
	65	16114-10400	SCREW-ADJUST THROTTLE	2	10	SS 410	
	66	16193-10400	SPRING-THROTTLE ADJUST SCREW	2	10	SS 410	
	67	16011-10615	CHAMBER-FLOAT	2	1	SS 410	
	68	16125-10615	COVER-FLOAT CHAMBER	1	1	SS 410	
	69	16064-10400	GASKET-FLOAT CHAMBER	2		SS 410	
	70	16065-85060	SCREW	8	10	SS 410	
	71	16061-10400	ASSY-FLOAT	2	4	SS 410	
	72	16062-10400	LEVER-FLOAT	2	1	SS 410	
	73	16066-10400	SHAFT-FLOAT LEVER	2	10	SS 410	

Printed in Japan

REVISED: SEPTEMBER, 1968

S	KEY NO.	PART NO.	PART NAME	Q'TY	SALES UNIT	MODEL	ICA
	74	16101-10400	ASSY-VALVE,NEEDLE	2		SS 410	
	75	16094-10400	WASHER	2	10	SS 410	
	76	16111-10615	NIPPLE (F)	1	5	SS 410	
*	77	16112-10615	NIPPLE (R)	1		SS 410	
*	78	16094-85060	PACKING	4		SS 410	
*	79	16098-08000	ASSY-STRAINER	2	10	SS 410	
	80	16331-10615	SCREW-SET,NIPPLE	2	1	SS 410	
	81	16331-10400	SCREW-SET,NIPPLE	2	10	SS 410	
	82	16335-10400	PACKING	4		SS 410	
	83	16322-12210	BOLT	2	10	SS 410	
	84	23109-30000	WASHER-LOCK	3		SS 410	
	85	16031-10560	PLUG-DRAIN	2		SS 410	
	86	16060-10400	WASHER	2		SS 410	
	87	16356-12210	PIPE-FUEL	2	5	SS 410	
	88	16357-12210	SLEEVE	2	1	SS 410	
	89	16359-12210	NUT-SLEEVE	2	1	SS 410	
*	90	16358-12210	CLIP	4	10	SS 410	
*	91	16360-10600	ASSY-LINK,THROTTLE,CARBURETOR	1		SS 410	
	92	16361-10600	SHAFT-THROTTLE	1	1	SS 410	
	93	16362-10600	ASSY-ARM,THROTTLE	1	1	SS 410	
	94	00369-02500	SCREW	1		SS 410	
	95	00915-11010	WASHER-LOCK	1	100	SS 410	
	96	00915-41010	WASHER-PLAIN	2		SS 410	
	97	00911-14010	NUT	1		SS 410	
	98	16365-10600	ARM-AUXILIARY SHAFT	2	2	SS 410	

Printed in Japan

REVISED: SEPTEMBER,1968

S	KEY NO.	PART NO.	PART NAME	Q'TY	SALES UNIT	MODEL	ICA
	99	14016-10600	BUSH-AUXILIARY SHAFT MANIFOLD	2	10	SS 410	
*	100	00915-11500	WASHER-LOCK	2	50	SS 410	
*	101	00911-14500	NUT	2	100	SS 410	
	102	16370-10600	ASSY-ROD,CONNECTING	2	2	SS 410	
	103	16373-12200	TUBE-BACKLE,CONNECTING ROD	1	10	SS 410	
	104	16374-12200	NUT-TUBE BACKLE	1	10	SS 410	
	105	16375-12200	NUT-TUBE BACKLE	1	10	SS 410	
	106	16376-10601	BRACKET-CHOKE WIRE	1		SS 410	
*	107	00369-01200	SCREW	2	50	SS 410	
	108	00915-11010	WASHER-LOCK	2	100	SS 410	

REVISED: SEPTEMBER,1968

Printed in Japan

NOTE

AIR CLEANER

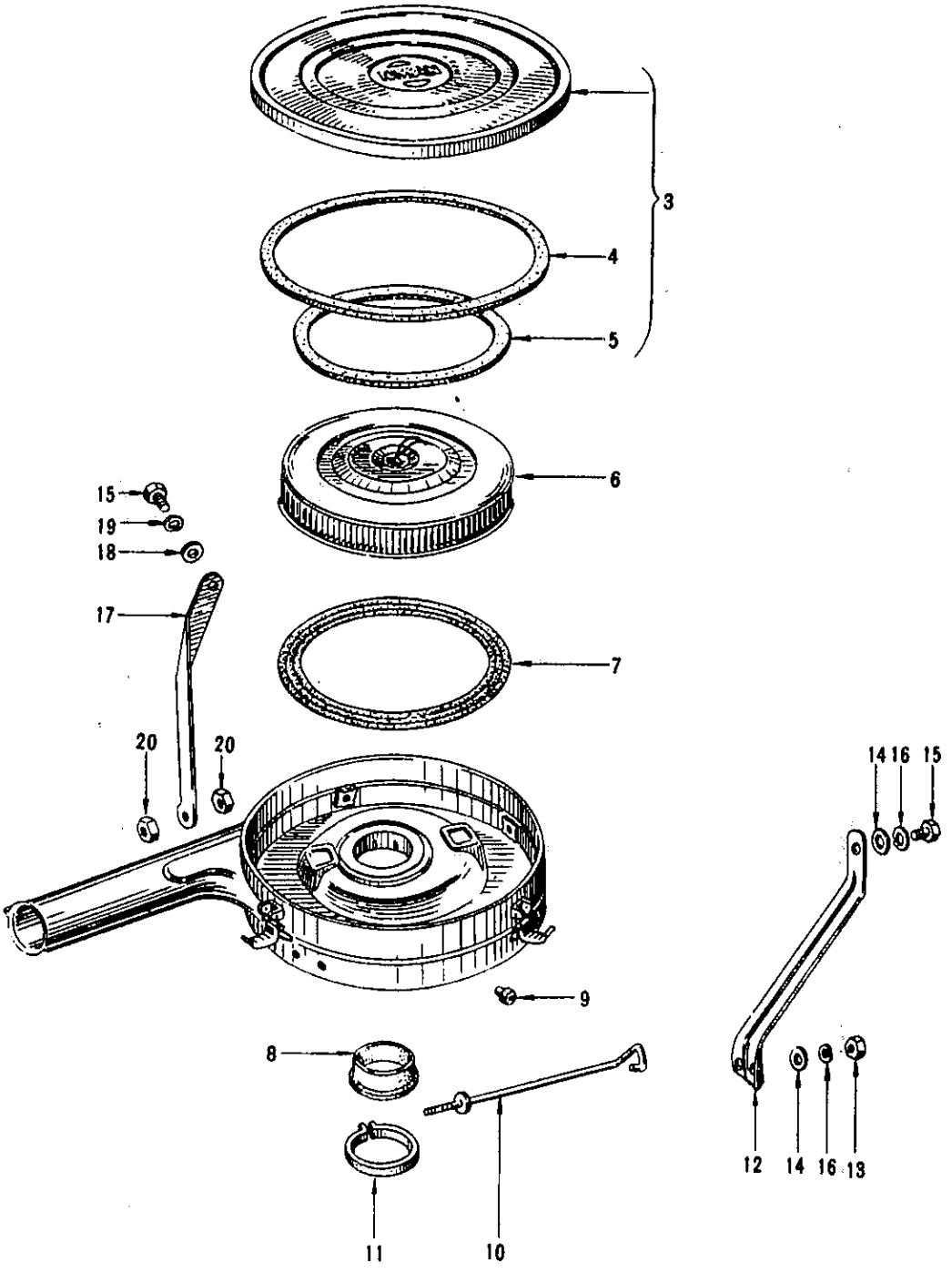

S	KEY NO.	PART NO.	PART NAME	Q'TY	SALES UNIT	MODEL	ICA
			AIR CLEANER				
*	1	16500-10800	ASSY-AIR CLEANER	1		410	
	2	16500-10801	ASSY-AIR CLEANER	1		410	N
*	3	16526-10800	ASSY-COVER (CAUTION PLATE IS WRITTEN IN ENGLISH)	1	1	410	
	4	16548-10600	PACKING	1	5	410	
*	5	16536-36700	PACKING	1	1	410	
*	6	16546-10600	ASSY-ELEMENT,PAPER	1		410	
	7	16547-08000	PACKING	1	50	410	
	8	16523-34201	INSULATOR	1	50	410	
*	9	16533-36700	GROMMET	1		410	
	10	16561-10600	BOLT-BAND	1	10	410	
	11	16560-10600	ASSY-BAND	1	1	410	
	12	16573-10600	SUPPORT (AIR CLEANER TO INTAKE MANIFOLD)	1	5	410	
	13	00911-14410	NUT TO FIX SUPPORT TO INTAKE MANIFOLD	2		410	
	14	00915-41410	WASHER-PLAIN TO FIX SUPPORT TO INTAKE MANIFOLD	4		410	
	15	00114-41210	BOLT TO FIX SUPPORT TO INTAKE MANIFOLD	2		410	
	16	00915-11410	WASHER-LOCK TO FIX SUPPORT TO INTAKE MANIFOLD	4		410	
	17	16575-10600	SUPPORT (AIR CLEANER,REAR)	1	5	410	

Printed in Japan

REVISED: SEPTEMBER,1968

S	KEY NO.	PART NO.	PART NAME	Q'TY	SALES UNIT	MODEL	ICA
	18	00915-41510	WASHER-PLAIN TO FIX SUPPORT TO INTAKE MANIFOLD	1		410	
	19	00915-11510	WASHER-LOCK TO FIX SUPPORT TO INTAKE MANIFOLD	1		410	
	20	00911-14510	NUT TO FIX SUPPORT TO INTAKE MANIFOLD	2		410	

Printed in Japan

REVISED: SEPTEMBER,1968

NOTE

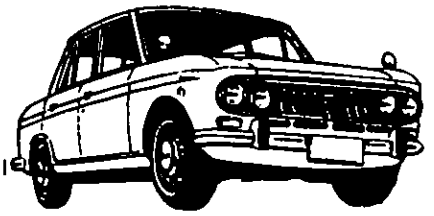

AIR CLEANER (SS)

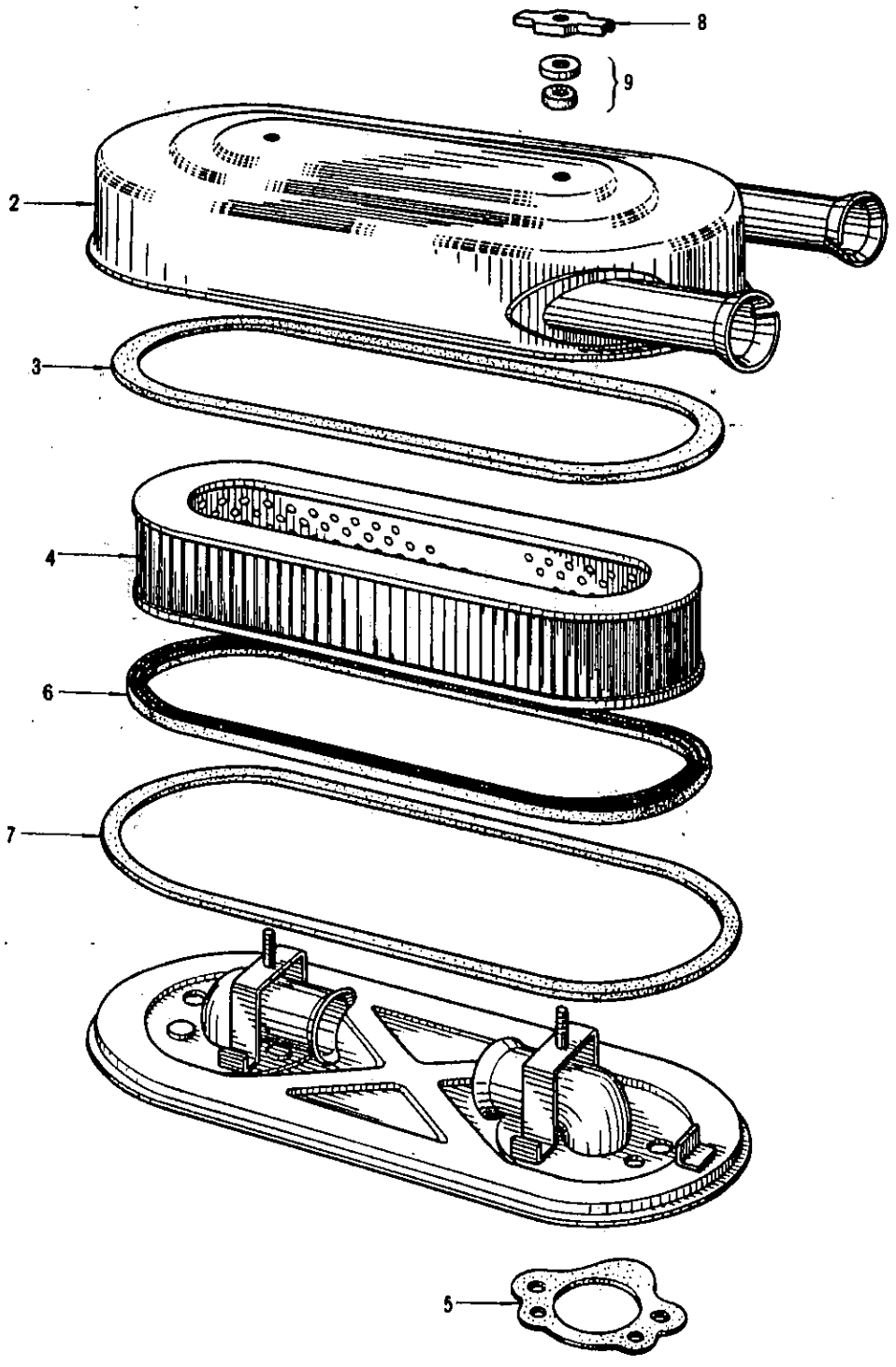

S	KEY NO.	PART NO.	PART NAME	Q'TY	SALES UNIT	MODEL	ICA
			AIR CLEANER (SS)				
*	1	16500-10611	ASSY-AIR CLEANER	1	1	SS 410	
*	2	16526-10611	ASSY-COVER,UPPER	1		SS 410	
	3	16547-10611	PACKING	1	1	SS 410	
*	4	16546-10611	ASSY-ELEMENT,PAPER	1		SS 410	
	5	16523-12200	GASKET	2	1	SS 410	
	6	16547-10611	PACKING	1	1	SS 410	
	7	16548-10611	PACKING	1	1	SS 410	
	8	16551-08000	NUT-WING	2	10	SS 410	
	9	16568-08000	ASSY-PACKING	2	5	SS 410	
	10	00369-51610	BOLT	2	50	SS 410	
	11	00916-21510	WASHER-LOCK	2	50	SS 410	

Printed in Japan

REVISED: SEPTEMBER,1968

NOTE

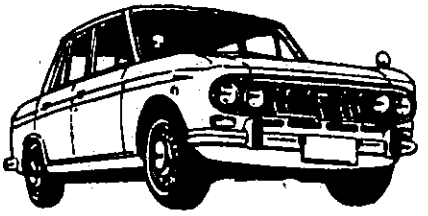

NOTE

FUEL PUMP

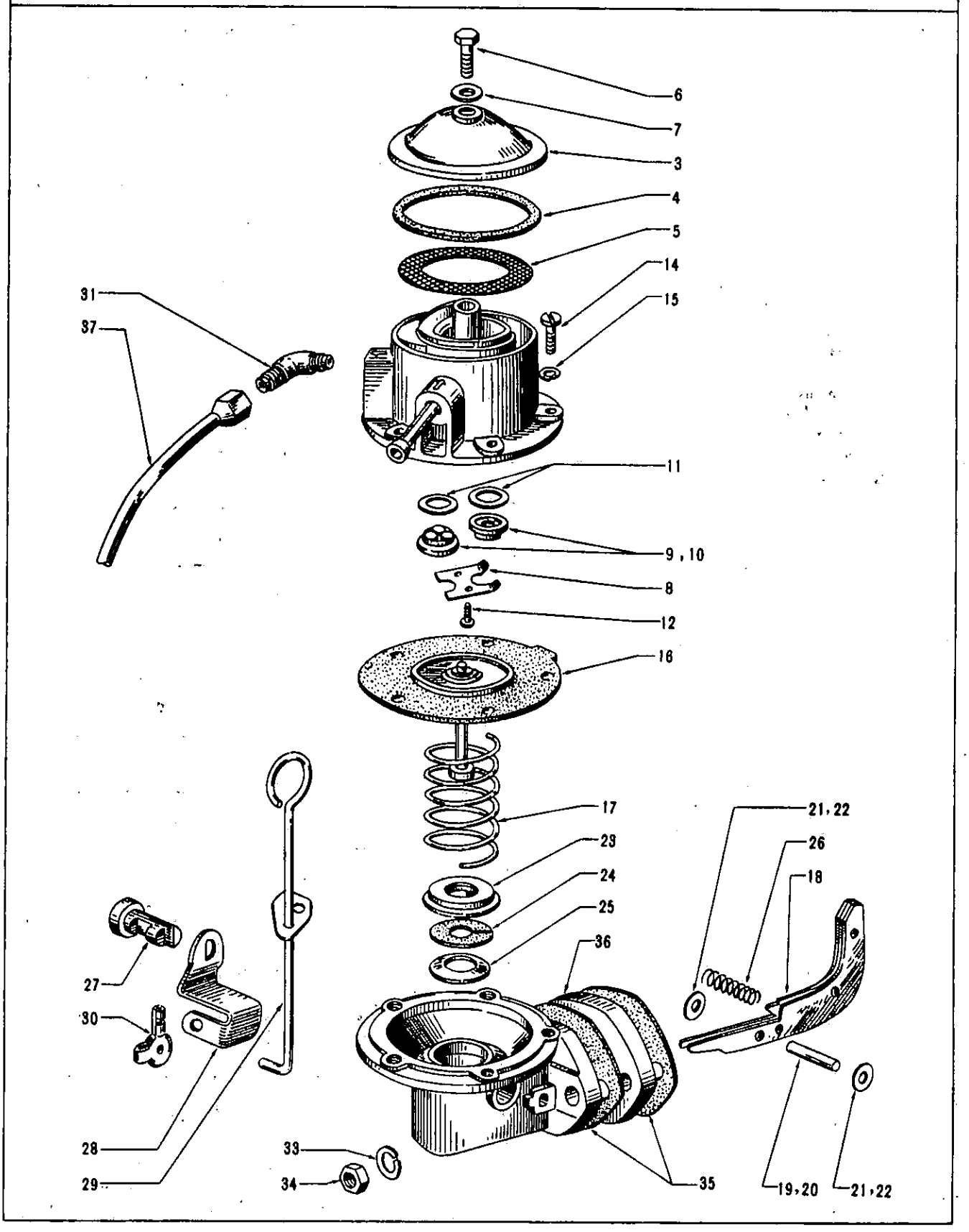
6
7
3
4
5
14
15
31
37
11
9, 10
8
12
16
17
23
24
25
36
21, 22
26
18
27
30
28
29
33
34
35
19, 20
21, 22

S	KEY NO.	PART NO.	PART NAME	Q'TY	SALES UNIT	MODEL	ICA
			FUEL PUMP				
	1	17010-08001	ASSY-PUMP,FUEL	1		410 EXC SS	
	2	17010-10610	ASSY-PUMP,FUEL	1		SS 410	
	3	17082-01300	CAP-FUEL PUMP	1	1	410	
	4	17081-01300	GASKET-FUEL PUMP CAP	1	10	410	
	5	17077-01300	SCREEN-FUEL PUMP	1	10	410	
	6	17084-85060	BOLT-CAP	1	10	410	
	7	17083-85060	WASHER-CAP SCREW	1	10	410	
	8	17072-01300	ASSY-RETAINER,VALVE	1	10	410	
	9	17065-52600	ASSY-VALVE,FUEL PUMP (SHOWA)	2	10	410	
	10	17065-50000	ASSY-VALVE,FUEL PUMP (KYOSAN)	2	10	410	
	11	17061-50000	PACKING-VALVE	2	10	410	
	12	17075-30100	SCREW-VALVE (SHOWA)	2	50	410	
	13	17075-50000	SCREW-VALVE (KYOSAN)	2	10	410	
	14	17089-58000	SCREW-BODY SET	5	10	410	
	15	17090-50000	WASHER-SPRING	5	10	410	
	16	17053-01300	ASSY-DIAPHRAGM	1	6	410	
	17	17052-00100	SPRING-DIAPHRAGM	1	10	410	
	18	17015-01300	ASSY-ARM,ROCKER	1	10	410	
	19	17019-50000	PIN-ROCKER ARM (SHOWA)	1	10	410	
*	20	17019-85060	PIN-ROCKER ARM (KYOSAN)	1	10	410	
	21	17016-01300	SPACER-SIDE ROCKER ARM (SHOWA)	2	10	410	

Printed in Japan

REVISED: SEPTEMBER,1968

S	KEY NO.	PART NO.	PART NAME	Q'TY	SALES UNIT	MODEL	ICA
	22	17016-01300	SPACER-SIDE,ROCKER ARM (KYOSAN)	1	10	410	
	23	17049-00100	CAP-GASKET,LOWER BODY	1	10	410	
	24	17048-00100	GASKET-LOWER BODY	1	10	410	
	25	17047-00100	SHEET-LOWER BODY GASKET	1	10	410	
	26	17020-00100	SPRING-ROCKER ARM	1	10	410	
	27	17040-08001	PIN-HAND PRIMER	1		410	
	28	17022-08000	LEVER-HAND PRIMER	1	10	410	
	29	17042-08000	ROD-HAND PRIMER LEVER	1	5	410	
	30	17025-50000	CLIP-HAND PRIMER	1	10	410	
	31	17103-50000	CONNECTOR-ANGLE,FLARED TUBE	1		410	
	32	17103-12200	ELBOW-CONNECTOR	1		SS 410	
	33	00915-11510	WASHER-LOCK	2		410	
	34	00911-14510	NUT	2		410	
	35	17099-30000	WASHER-JOINT,FUEL PUMP	2	10	410	
	36	16420-30100	SPACER (FUEL PUMP TO CRANK CASE)	1	5	410	
	37	17522-10600	ASSY-TUBE,FUEL PUMP TO NIKKIS CARBURETOR	1		410	
	38	17522-10605	TUBE-FUEL PUMP TO CARBURETOR	1	5	SS 410	
	39	17525-10605	TUBE-CARBURETOR TO CARBURETOR	1	10	SS 410	

REVISED: SEPTEMBER,1968

Printed in Japan

NOTE

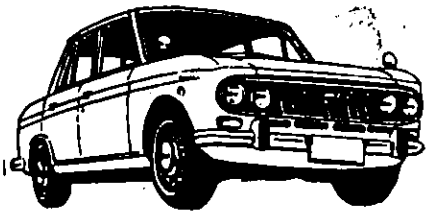

FUEL STRAINER

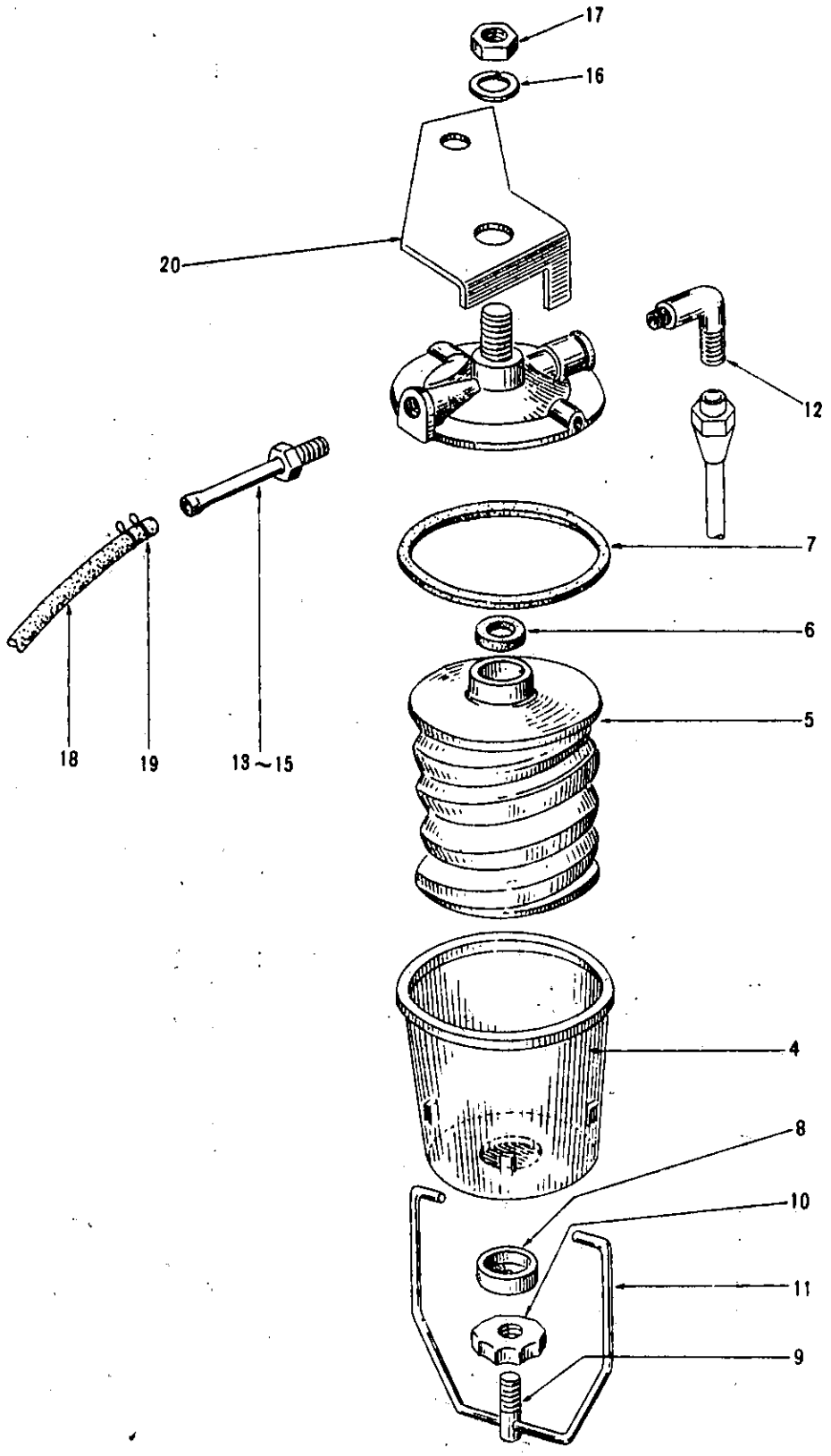

NOTE

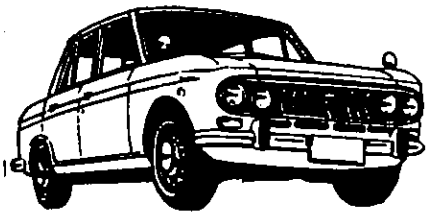

FUEL TANK

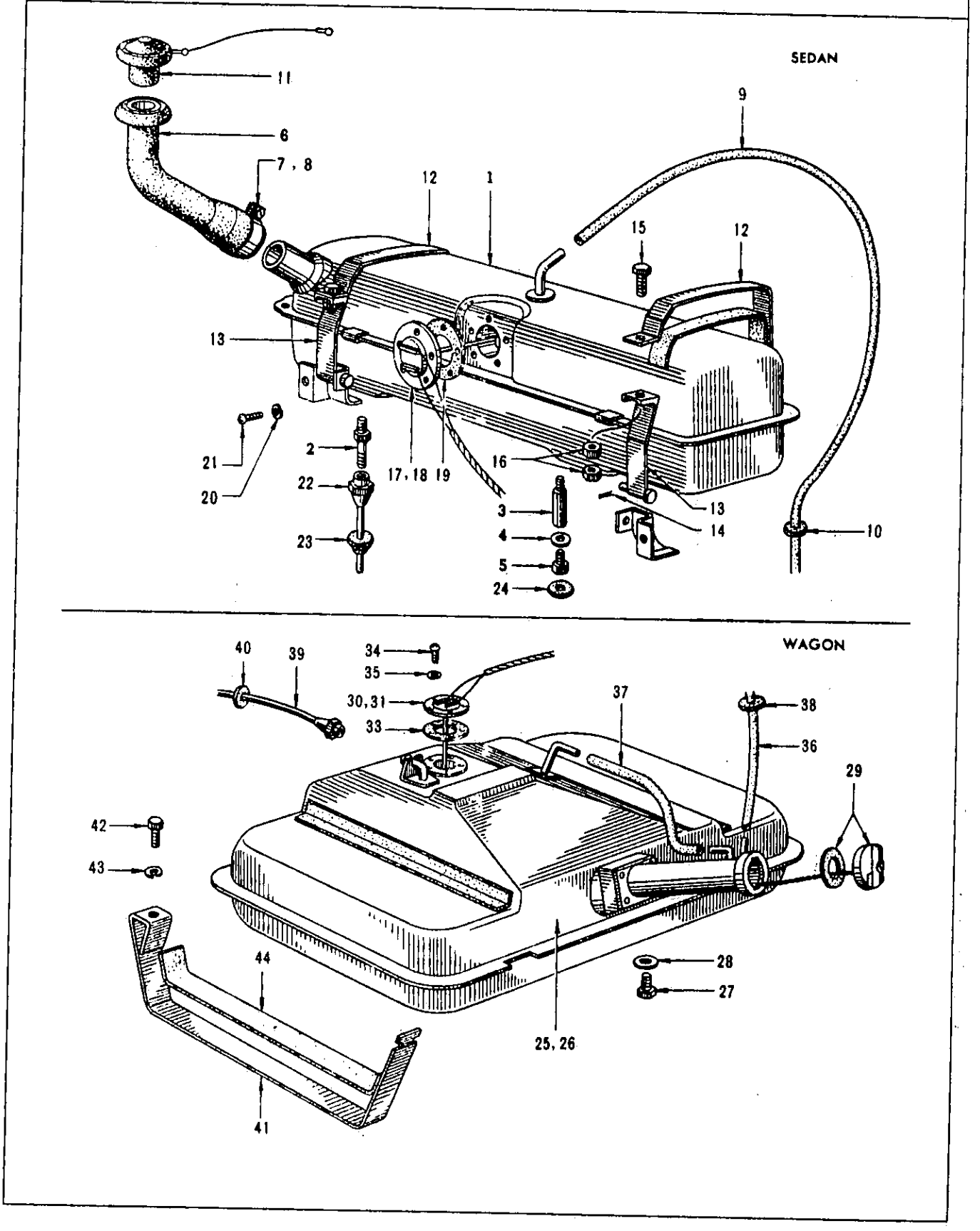
SEDAN
11
6
7, 8
12
1
9
15
12
13
21
20
2
22
23
17, 18 19
16
3
4
5
24
13
14
10
WAGON
40
39
34
35
30, 31
33
37
38
36
29
42
43
44
28
27
25, 26
41

S	KEY NO.	PART NO.	PART NAME	QTY	SALES UNIT	MODEL	ICA
			FUEL TANK				
*	1	17201-10600	ASSY-TANK,FUEL	1	1	SEDAN 410	
	2	17103-10600	CONNECTOR-STRAIGHT	1	10	SEDAN 410	
	3	17311-09400	TUBE-DRAIN,FUEL TANK	1		SEDAN 410	
	4	17301-09400	WASHER-DRAIN PLUG	1	10	SEDAN 410	
	5	00931-42610	PLUG	1	50	SEDAN 410	
*	6	17213-10600	TUBE-FILLER,FUEL TANK, UPPER	1	1	SEDAN 410	
	7	17230-50000	CLAMP-RUBBER HOSE,FUEL TANK	1	2	SEDAN 410	
	8	00721-16400	CLAMP-RUBBER HOSE,FUEL TANK	1		SEDAN 410	Y
	9	17232-10600	TUBE-BREATHER,FUEL TANK UPPER	1		SEDAN 410	
*	10	24051-02700	GROMMET	1	50	SEDAN 410	
	11	17251-10601	ASSY-CAP,FILLER TANK	1		SEDAN 410	
	12	17410-10600	ASSY-BAND,FUEL TANK,FRONT	2	2	SEDAN 410	
	13	17412-10600	ASSY-BAND,FUEL TANK,REAR	2	1	SEDAN 410	
	14	00921-01210	PIN-COTTER	2		SEDAN 410	
	15	00114-43210	BOLT	2	25	SEDAN 410	
	16	00911-34410	NUT	4		SEDAN 410	
	17	17291-10601	ASSY-GAUGE,FUEL TANK	1	2	SEDAN 410	
	18	25060-13200	ASSY-GAUGE,TANK UNIT (FROM SEPT.-64)	1		SEDAN 410	N
*	19	17293-04100	GASKET-GAUGE TO TANK	1	5	SEDAN 410	

S	KEY NO.	PART NO.	PART NAME	Q'TY	SALES UNIT	MODEL	ICA
	20	00915-10810	WASHER-LOCK TO FIX GAUGE	5		SEDAN 410	
	21	00310-80810	SCREW TO FIX GAUGE	5	50	SEDAN 410	
	22	17501-10601	ASSY-TUBE (FUEL TANK TO STRAINER)	1	1	SEDAN 410	
	23	17544-04100	GROMMET	1	1	SEDAN 410	
	24	17543-10600	GROMMET	1		SEDAN 410	
*	25	17201-10900	ASSY-TANK,FUEL	1	1	WAGON 410	
	26	17201-10901	ASSY-TANK,FUEL (FROM SEPT.-64)	1	1	WAGON 410	Y
*	27	11120-30000	PLUG-DRAIN	1	10	WAGON 410	
	28	17541-30000	WASHER-JOINT	1	10	WAGON 410	
*	29	17251-10900	ASSY-CAP,FILLER	1	10	WAGON 410	
*	30	17291-10900	ASSY-GAUGE,FUEL	1	2	WAGON 410	
	31	17291-13400	ASSY-GAUGE,FUEL (FROM SEPT.-64)	1	1	WAGON 410	N
*	32	17293-04100	GASKET-FUEL TANK GAUGE TO TANK	1	5	WAGON 410	
	33	17293-10900	GASKET-FUEL TANK GAUGE TO TANK	1	10	WAGON 410	Y
	34	00310-80810	SCREW TO FIX GAUGE TO TANK	5	50	WAGON 410	
	35	00915-10810	WASHER-PLAIN TO FIX GAUGE TO TANK	5		WAGON 410	
	36	17232-10900	TUBE-VENTILATION D	1	1	WAGON 410	
	37	17234-10900	TUBE-VENTILATION E	1	1	WAGON 410	
	38	00951-21000	GROMMET-RUBBER	2		WAGON 410	
	39	17501-10901	ASSY-TUBE,FUEL TANK TO STRAINER	1	1	WAGON 410	
	40	17543-10600	GROMMET-RUBBER (TYPE 6)	1		WAGON 410	

REVISED: SEPTEMBER,1968

Printed in Japan

S	KEY NO.	PART NO.	PART NAME	Q'TY	SALES UNIT	MODEL	ICA
	41	17410-10900	ASSY-BAND,FUEL TANK	2	1	WAGON 410	
	42	00114-52510	BOLT	2	50	WAGON 410	
	43	00915-11510	WASHER-LOCK	2		WAGON 410	
	44	17416-10900	SHIM	2	5	WAGON 410	

REVISED: SEPTEMBER,1968

Printed in Japan

NOTE

NOTE

ACCELERATOR

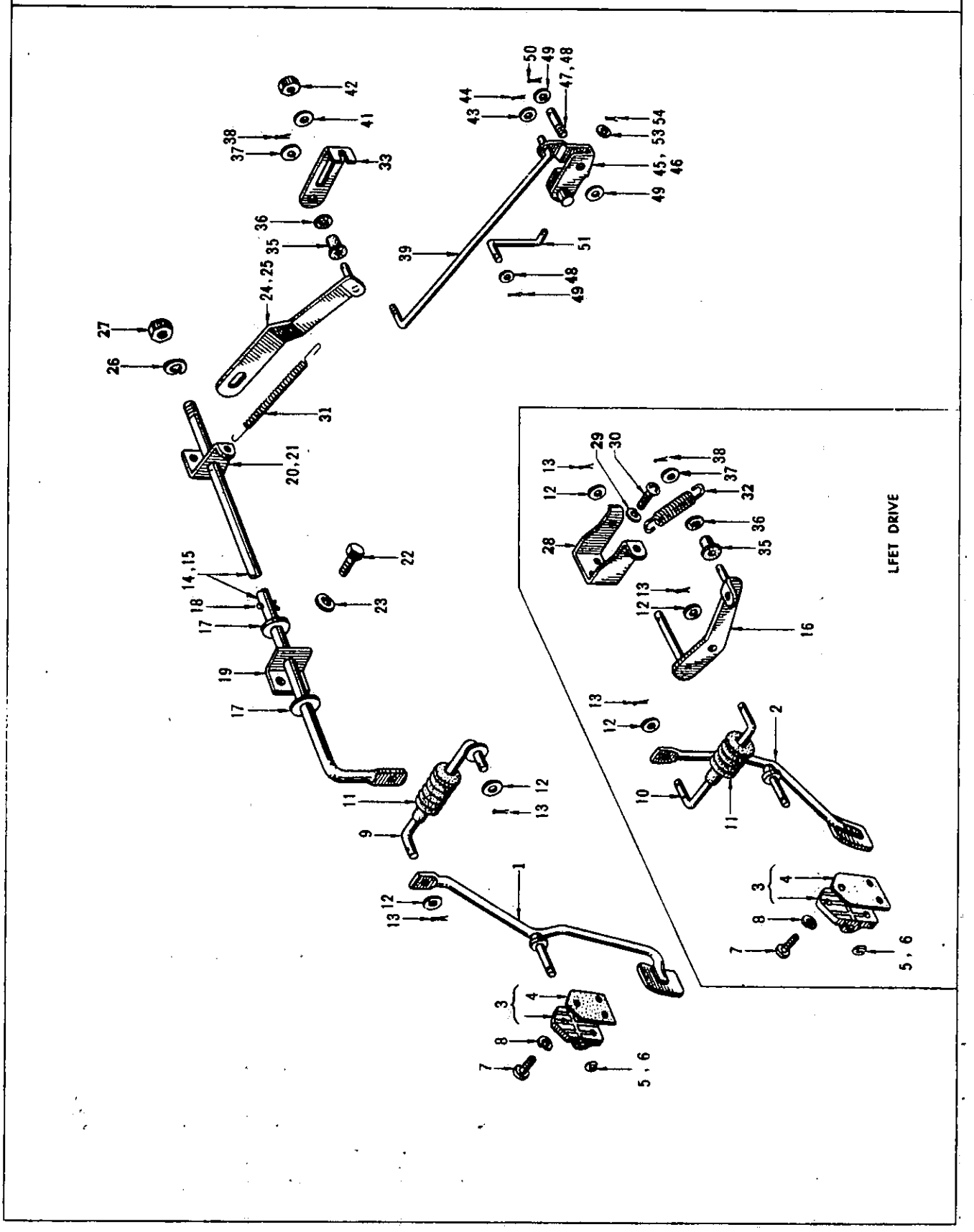

S	KEY NO.	PART NO.	PART NAME	Q'TY	SALES UNIT	MODEL	ICA
			ACCELERATOR				
*	1	18010-10601	ASSY-PEDAL,ACCELERATOR	1		R DRIVE 410	
*	2	18010-10800	ASSY-PEDAL,ACCELERATOR	1	1	L DRIVE 410	
*	3	18020-10601	ASSY-BRACKET,ACCELERATOR PEDAL	1	1	410	
	4	18019-10600	PACKING-PEDAL BRACKET	1	10	410	
	5	18137-10600	RING-SNAP, E TYPE	1	10	410(EXC.SS)	
	6	18137-10605	RING-SNAP, E TYPE	1	50	SS 410	
	7	00314-01210	SCREW TO FIX PEDAL BRACKET TO DASH LOWER	3	50	410	
	8	00915-11010	WASHER-LOCK TO FIX PEDAL BRACKET TO DASH LOWER	3	100	410	
	9	18141-10601	ROD-ACCELERATOR PEDAL TO CROSS SHAFT	1		R DRIVE 410	
	10	18141-10800	ROD-ACCELERATOR PEDAL TO LEVER	1	5	L DRIVE 410	
	11	18043-61000	BOOT-ACCELERATOR ROD	1	5	410	
	12	00915-41410	WASHER-PLAIN	2		410	
	13	00921-11510	PIN-COTTER	2		410	
	14	18100-10601	ASSY-SHAFT,CROSS,ACCELERATOR	1		R DRIVE 410	
	15	18100-10605	ASSY-SHAFT,CROSS,ACCELERATOR	1	2	SS 410	
	16	18100-10800	ASSY-LEVER,ACCELERATOR	1	1	L DRIVE 410	
	17	18126-61000	WASHER-CROSS SHAFT	2	1	410	

Printed in Japan

REVISED: SEPTEMBER,1968

S	KEY NO.	PART NO.	PART NAME	Q'TY	SALES UNIT	MODEL	ICA
	18	00921-21810	PIN-COTTER	1		410	
	19	18127-61000	BRACKET-ACCELERATOR CROSS SHAFT	1	10	R DRIVE 410	
	20	18129-10600	BRACKET-ACCELERATOR CROSS SHAFT	1	1	R DRIVE 410	
	21	18129-10605	BRACKET-ACCELERATOR CROSS SHAFT	1	1	SS 410	
	22	00369-01210	SCREW TO FIX BRACKET	4	50	R DRIVE 410	
	23	00915-11010	WASHER-LOCK TO FIX BRACKET	4	100	R DRIVE 410	
	24	18116-10600	ASSY-LEVER,CROSS SHAFT,ACCELERATOR	1		R DRIVE 410	
	25	18116-10605	ASSY-LEVER,CROSS SHAFT,ACCELERATOR	1	5	SS 410	
	26	00915-11610	WASHER-LOCK	1		R DRIVE 410	
	27	00911-14610	NUT	1		R DRIVE 410	
	28	18128-10800	BRACKET-ACCELERATOR LEVER SHAFT	1		L DRIVE 410	
	29	00915-11010	WASHER-LOCK TO FIX BRACKET	2	100	L DRIVE 410	
	30	00369-01210	SCREW TO FIX BRACKET	2	50	L DRIVE 410	
	31	18138-10602	SPRING-RETURN,ACCELERATOR	1	5	R DRIVE 410	
	32	18138-10800	SPRING-RETURN,ACCELERATOR	1	5	L DRIVE,SS 410	
	33	18022-61000	PLATE-ADJUSTING (CROSS SHAFT TO ROD)	1	10	410	
	34	18022-10600	PLATE-ADJUSTING (CROSS SHAFT TO ROD)	1	1	410	Y
	35	18023-61000	BUSHING-RUBBER,ADJUSTING ROD	1	10	410	

REVISED: SEPTEMBER,1968

Printed in Japan

S	KEY NO.	PART NO.	PART NAME	Q'TY	SALES UNIT	MODEL	ICA
	36	18027-61000	COLLAR-ADJUSTING PLATE (NYLON)	1	10	410	
	37	18028-61000	WASHER-ADJUSTING PLATE	1	1	410	
	38	00921-11510	PIN-COTTER	1		410	
	39	18142-10601	ROD (CROSS SHAFT TO BE LL CRANK)	1		410(EXC.SS)	
*	40	18142-10605	ROD (CROSS SHAFT TO BE LL CRANK)	1	1	SS 410	
	41	00916-31410	WASHER-TOOTH LOCK	1	50	410	
	42	00911-14410	NUT	1		410	
	43	00915-41410	WASHER-PLAIN	1		410	
	44	00921-11510	PIN-COTTER	1		410	
	45	18146-10601	CRANK-BELL,THROTTLE CO NTROL	1	1	410(EXC.SS)	
	46	18146-10605	CRANK-BELL,THROTTLE CO NTROL	1	1	SS 410	
	47	18150-10601	SHAFT-BELL CRANK	1	5	410(EXC.SS)	
	48	18150-10605	SHAFT-BELL CRANK	1		SS 410	
	49	18151-10600	WASHER-PLAIN	1	50	410	
	50	00921-22010	PIN-COTTER	1		410	
	51	18170-10602	ROD (BELL CRANK TO THR OTTLE LEVER)	1	5	410(EXC.SS)	
	52	18170-10605	ASSY-JOINT,BELL CRANK	1	10	SS 410	
	53	00915-40810	WASHER-PLAIN	2		410	
	54	00921-01010	PIN-COTTER	2		410	
*	55	18410-10601	ASSY-WIRE,CHOKE CONTRO L (BLACK)	1	1	410(EXC.SS)	
	56	18410-10602	ASSY-WIRE,CHOKE CONTRO L (BLACK)	1	1	410(EXC.SS)	

Printed in Japan

REVISED: SEPTEMBER,1968

S	KEY NO.	PART NO.	PART NAME	Q'TY	SALES UNIT	MODEL	ICA
	57	18410-10605	ASSY-WIRE,CHOKE CONTROL	1	2	SS 410	
	58	18415-10600	ASSY-KNOB,CHOKE CONTROL (BLACK)	1	5	410(EXC.SS)	
	59	18415-12900	ASSY-KNOB,CHOKE CONTROL	1	10	SS 410	
	60	24256-36700	GROMMET-RUBBER (TO DASH LOWER PANEL)	1		410	

REVISED: SEPTEMBER,1968

Printed in Japan

NOTE

EXHAUST TUBES

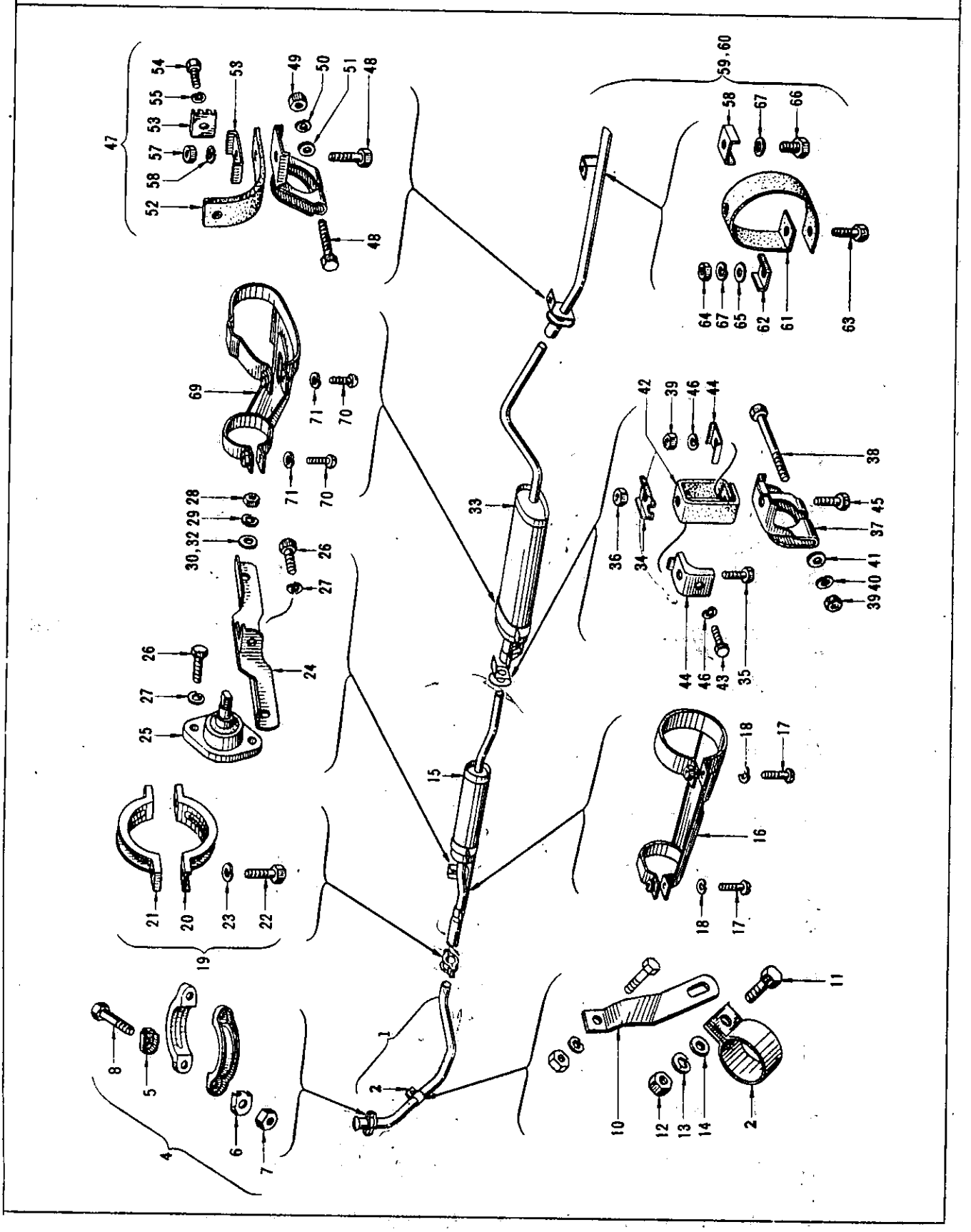

S	KEY NO.	PART NO.	PART NAME	Q'TY	SALES UNIT	MODEL	ICA
			EXHAUST TUBES				
	1	20011-10650	ASSY-TUBE,EXHAUST FRONT,WITH CLAMP	1		410(EXC.SS)	
	2	20134-32700	CLAMP-MUFFLER,REAR	1	50	410	
	3	20010-10605	TUBE-EXHAUST,FRONT	1	1	SS 410	
	4	20013-04150	ASSY-CLAMP TO FIX FRONT TUBE TO EXHAUST MANIFOLD	1	10	410	
	5	20014-04100	SEAT-CLAMP TO FIX FRONT TUBE TO EXHAUST MANIFOLD	2	50	410	
	6	20015-04100	SEAT-CLAMP TO FIX FRONT TUBE TO EXHAUST MANIFOLD	2	50	410	
	7	14039-30000	NUT-SPECIAL TO FIX FRONT TUBE TO EXHAUST MANIFOLD	2	50	410	
	8	00114-55010	BOLT TO FIX FRONT TUBE TO EXHAUST MANIFOLD	2	50	410	
	9	20711-10605	GASKET-EXHAUST	1	10	SS 410	
	10	20601-10600	BRACKET-CLAMP,EXHAUST	1	1	410	
	11	00114-52510	BOLT TO FIX FRONT TUBE TO TRANSMISSION CASE	1	50	410	
	12	00911-14510	NUT TO FIX FRONT TUBE TO TRANSMISSION CASE	1		410	
	13	00915-11510	WASHER-LOCK TO FIX FRONT TUBE TO TRANSMISSION CASE	1		410	
	14	00915-41510	WASHER-PLAIN TO FIX FRONT TUBE TO TRANSMISSION CASE	1		410	
	15	20301-10651	ASSY-PRE MUFFLER	1		410	

Printed in Japan

REVISED: SEPTEMBER,1968

S	KEY NO.	PART NO.	PART NAME	Q'TY	SALES UNIT	MODEL	ICA
	16	20320-10600	PROTECTOR	1	1	410	
	17	00314-41610	SCREW	2	50	410	
	18	00915-11410	WASHER	2		410	
	19	20132-08750	ASSY-CLAMP TO FIX PRE-MUFFLER TO FRONT TUBE	1	50	410	
	20	20132-08700	CLAMP-LOWER TO FIX PRE-MUFFLER TO FRONT TUBE	1	10	410	
	21	20133-08700	CLAMP-UPPER TO FIX PRE-MUFFLER TO FRONT TUBE	1	10	410	
	22	00114-52010	BOLT TO FIX PRE-MUFFLER TO FRONT TUBE	2		410	
	23	00915-11510	WASHER-LOCK TO FIX PRE-MUFFLER TO FRONT TUBE	2		410	
	24	20611-10601	BAR-EXHAUST TUBE MOUNTING	1	50	410	
	25	20136-10600	MOUNTING TO FIX PRE-MUFFLER TO 2ND CROSS MEMBER	2	10	410	
	26	00114-51610	BOLT TO FIX PRE-MUFFLER TO 2ND CROSS MEMBER	5		410	
	27	00915-11510	WASHER-LOCK TO FIX PRE-MUFFLER TO 2ND CROSS MEMBER	5		410	
	28	00911-14510	NUT TO FIX PRE-MUFFLER TO BAR	3		410	
	29	00915-11510	WASHER-LOCK TO FIX PRE-MUFFLER TO BAR	3		410	
	30	00915-41510	WASHER-PLAIN TO FIX PRE-MUFFLER TO BAR	3		410	
	31	00911-14610	NUT TO FIX PRE-MUFFLER TO 2ND CROSS MEMBER	2		410	
	32	00915-11610	WASHER-LOCK TO FIX PRE-MUFFLER TO 2ND CROSS MEMBER	2		410	
	33	20101-10600	ASSY-MUFFLER	1		410	

REVISED: SEPTEMBER, 1968

Printed in Japan

S	KEY NO.	PART NO.	PART NAME	Q'TY	SALES-UNIT	MODEL	ICA
	34	20622-10600	WASHER TO FIX MUFFLER TO REAR FLOOR	1	10	410	
	35	00114-52210	BOLT TO FIX MUFFLER TO REAR FLOOR	1		410	
	36	00911-14510	NUT-SELF LOCKING TO FIX MUFFLER TO REAR FLOOR	1		410	
	37	20624-10650	ASSY-CLAMP TO FIX MUFFLER TO REAR FLOOR	1	1	410	
	38	00114-57010	BOLT TO FIX MUFFLER TO REAR FLOOR	1	50	410	
	39	00911-14510	NUT TO FIX MUFFLER TO REAR FLOOR	2		410	
	40	00915-11510	WASHER-LOCK TO FIX MUFFLER TO REAR FLOOR	1		410	
	41	00915-41510	WASHER-PLAIN TO FIX MUFFLER TO REAR FLOOR	1		410	
	42	20643-10600	STRAP-HANGER TO FIX MUFFLER TO REAR FLOOR	1	1	410	
	43	00114-53510	BOLT TO FIX MUFFLER TO REAR FLOOR	1	50	410	
	44	20622-10600	WASHER-STRAP	1	10	410	
	45	00114-52510	BOLT	1	50	410	
	46	00915-11510	WASHER-LOCK	1		410	
	47	20631-10650	ASSY-CLAMP TO FIX REAR TUBE TO MUFFLER	1	5	410	
	48	00114-56510	BOLT TO FIX REAR TUBE TO MUFFLER	1	25	410	
	49	00911-14510	NUT TO FIX REAR TUBE TO MUFFLER	1		410	
	50	00915-11510	WASHER-LOCK TO FIX REAR TUBE TO MUFFLER	1		410	
	51	00915-41510	WASHER-PLAIN TO FIX REAR TUBE TO MUFFLER	1		410	

Printed in Japan

REVISED: SEPTEMBER, 1968

S	KEY NO.	PART NO.	PART NAME	Q'TY	SALES UNIT	MODEL	ICA
	52	20632-10600	STRAP-HANGER TO FIX RE AR TUBE TO MUFFLER	1	10	410	
	53	20622-10600	WASHER-STRAP TO FIX RE AR TUBE TO MUFFLER	2	10	410	
	54	00114-52510	BOLT TO FIX REAR TUBE TO MUFFLER	1	50	410	
	55	00912-34510	NUT-SELF LOCK TO FIX R EAR TUBE TO MUFFLER	1		410	
	56	00114-52210	BOLT	1		410	
	57	00911-14510	NUT	1		410	
	58	00915-11510	WASHER-LOCK	1		410	
*	59	20201-10650	ASSY-TUBE,EXHAUST,WITH STRAP,REAR	1	1	410	
	60	20201-10651	ASSY-TUBE,EXHAUST,WITH STRAP,REAR	1		410	Y
	61	20623-10600	STRAP-HANGER TO FIX TU BE TO SIDE MEMBER	1	5	410	
	62	20622-10600	WASHER-STRAP TO FIX TU BE TO SIDE MEMBER	1	10	410	
	63	00114-53510	BOLT TO FIX TUBE TO SI DE MEMBER	1	50	410	
	64	00912-34510	NUT TO FIX TUBE TO SID E MEMBER	1		410	
	65	00915-41510	WASHER-PLAIN TO FIX TU BE TO SIDE MEMBER	1		410	
	66	00114-52510	BOLT TO FIX TUBE TO SI DE MEMBER	1	50	410	
	67	00915-11510	WASHER-LOCK TO FIX TUB E TO SIDE MEMBER	1		410	
	68	20622-10600	WASHER-STRAP TO FIX TU BE TO SIDE MEMBER	1	10	410	
	69	20120-10600	PROTECTOR-MUFFLER	1		410	
	70	00314-41610	SCREW	2	50	410	

REVISED: SEPTEMBER,1968

Printed in Japan

S	KEY NO.	PART NO.	PART NAME	Q'TY	SALES UNIT	MODEL	ICA
	71	00915-11410	WASHER	2		410	

NOTE

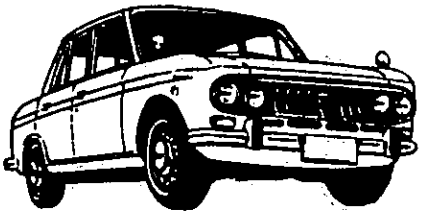

NOTE

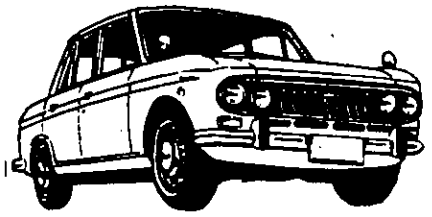

WATER PUMP & FAN

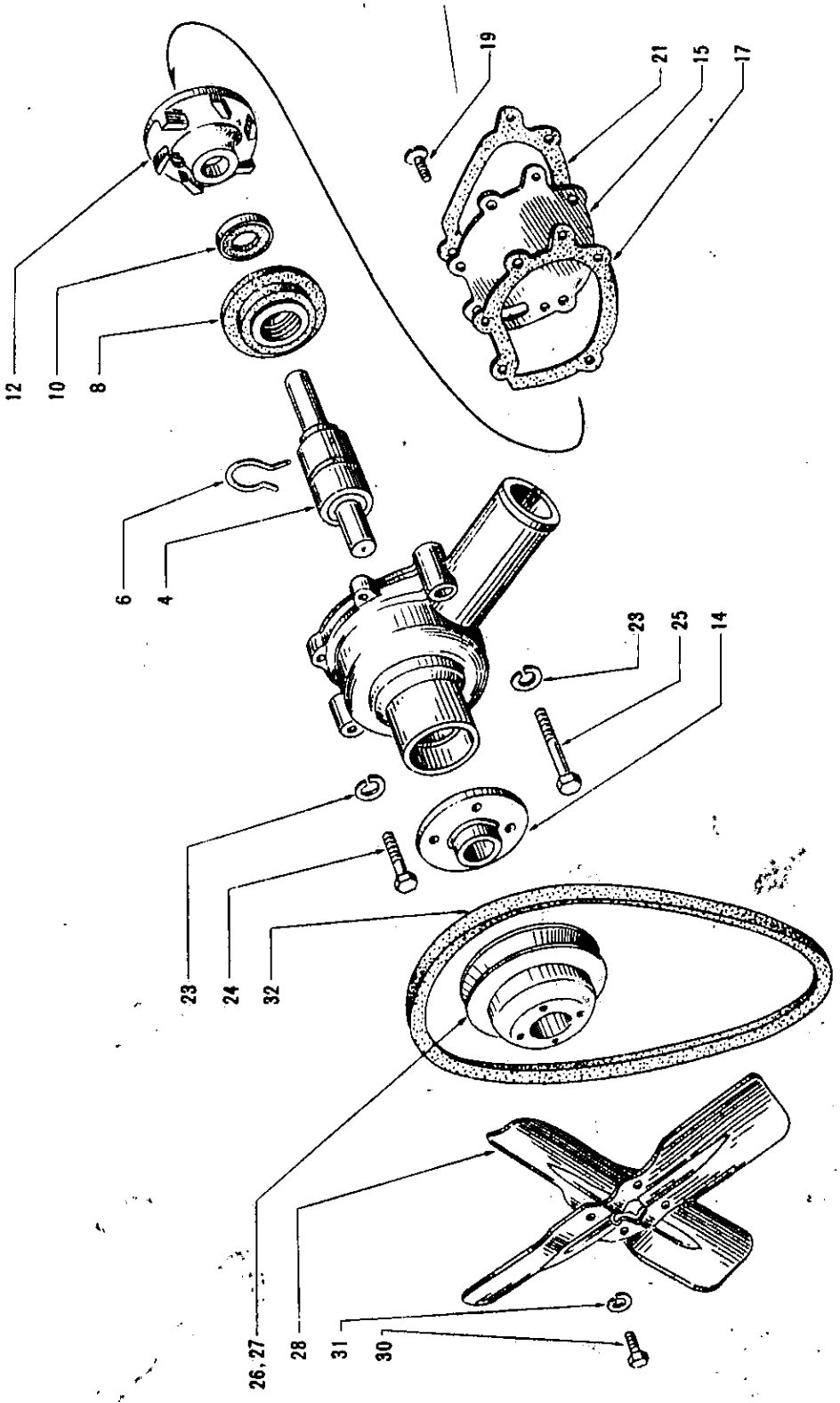

WATER PUMP & FAN

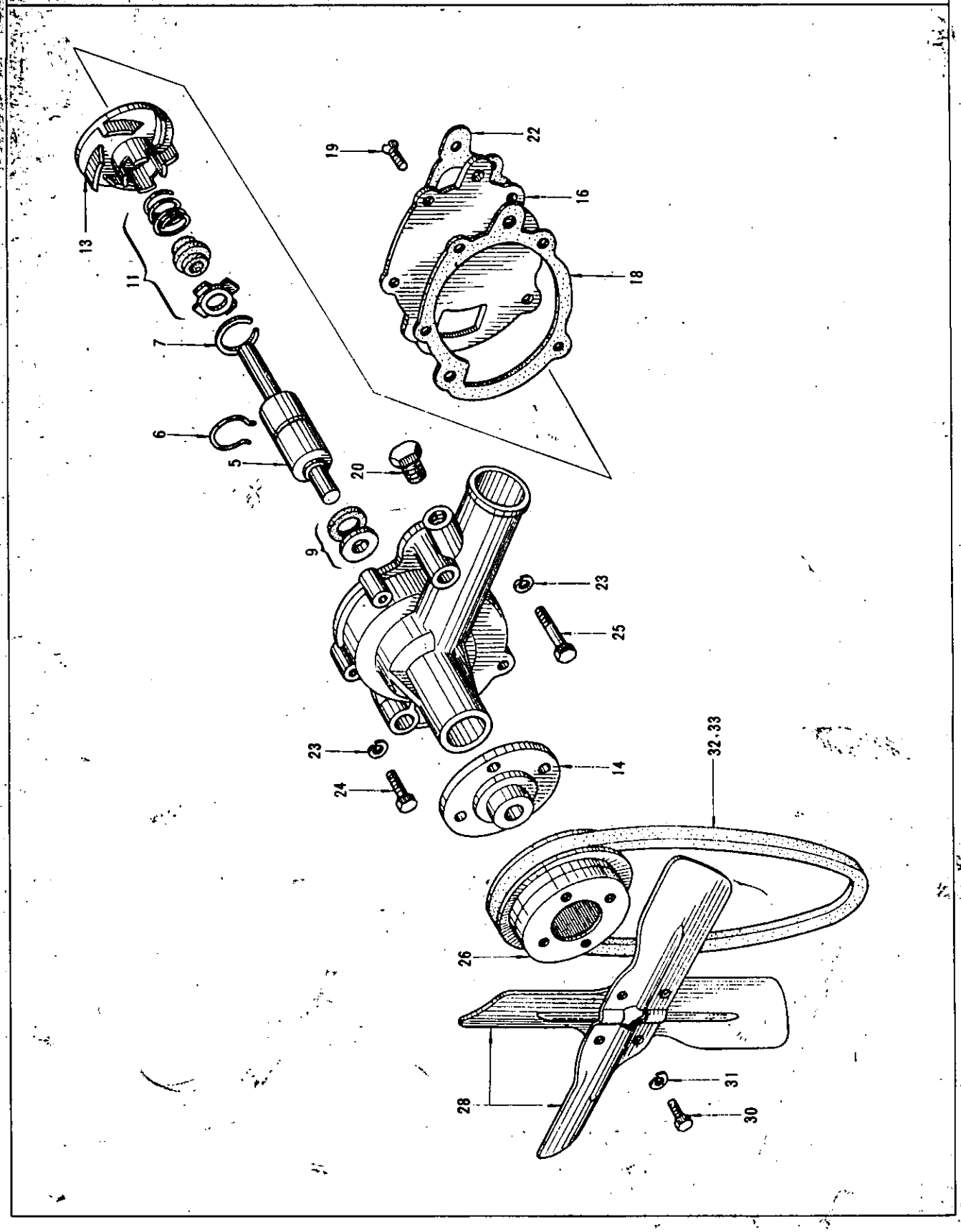

S	KEY NO.	PART NO.	PART NAME	QTY	SALES UNIT	MODEL	ICA
			WATER PUMP & FAN				
	1	21010-08000	ASSY-PUMP,WATER	1		410	
*	2	21010-10600	ASSY-PUMP,WATER	1		410	Y
	3	21010-13200	ASSY-PUMP,WATER (FROM SEPT.-64)	1	1	410	N
	4	21035-04000	BEARING-WATER PUMP	1	1	410	
	5	21035-13200	BEARING-WATER PUMP (FROM SEPT.-64)	1		410	N
	6	21043-04000	WIRE-LOCK,WATER PUMP	1	50	410	
	7	21023-61000	RING-SNAP,WATER PUMP VANE(FROM SEPT.-64)	1	10	410	
	8	21026-04000	SEAL-WATER PUMP	1		410	
*	9	21026-10600	SEAL-WATER PUMP (FROM SEPT.-64)	1		410	Y
	10	21027-04000	ASSY-SEAT,FLOATING,WATER PUMP	1		410	
*	11	21027-10600	ASSY-SEAT,FLOATING,WATER PUMP	1	10	410	Y
	12	21022-04001	VANE-WATER PUMP	1	5	410	
	13	21022-13200	VANE-WATER PUMP (FROM SEPT.-64)	1	1	410	N
	14	21054-04000	HUB-FAN & WATER PUMP PULLEY	1		410	
	15	21013-08000	COVER-WATER PUMP	1	1	410	
	16	21013-13200	COVER-WATER PUMP (FROM SEPT.-64)	1	1	410	N
	17	21014-08000	GASKET-WATER PUMP COVER (PUMP BODY SIDE)	1	50	410	
	18	21014-13200	GASKET-WATER PUMP COVER (PUMP BODY SIDE)	1	10	410	N

REVISED: SEPTEMBER,1968

Printed in Japan

S	KEY NO.	PART NO.	PART NAME			
	19	21012-01300	SCREW			
	20	00931-30610	PLUG-TAPER (FROM SEPT. -64)	1		
	21	21074-08000	GASKET-WATER PUMP COVER (BLOCK SIDE)	1	50	
	22	21074-13200	GASKET-WATER PUMP COVER (BLOCK SIDE)(FROM SEPT.-64)	1	10	410
*	23	00915-11500	WASHER-LOCK TO FIX WATER PUMP	3	50	410
	24	00114-53510	BOLT TO FIX WATER PUMP	2	50	410
	25	00114-55010	BOLT TO FIX WATER PUMP	1	50	410
	26	21051-10600	PULLEY-FAN & WATER PUMP(=131M/M)	1	1	410
	27	21051-10800	PULLEY-FAN & WATER PUMP(=143M/M)	1	1	OP 410
*	28	21060-07200	ASSY-BLADE,FAN	1	1	410
*	29	21064-10600	SPACER-FAN	1	10	410
	30	00114-42510	SCREW-SET TO FIX FAN TO PULLY	4	50	410
*	31	00915-21400	WASHER-LOCK TO FIX FAN TO PULLY	4	50	410
	32	21067-10600	BELT-FAN	1	10	410
	33	21067-10800	BELT-FAN(USED FOR 2 SMB TYPE BATTERY)	1	10	OP 410
	34	21026-04025	KIT-REPAIR,WATER PUMP SEAL(THE KIT INCLUDE KEY NO.3,4,8,10)	1		410
	35	21026-13225	KIT-REPAIR,WATER PUMP SEAL(FROM SEPT.-64)	1	1	410

Printed in Japan

REVISED: SEPTEMBER,1968

NOTE

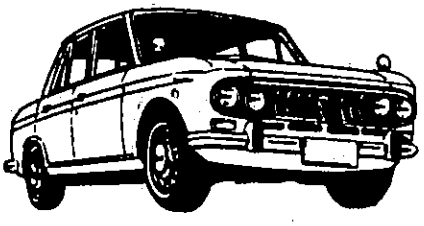

NOTE

RADIATOR

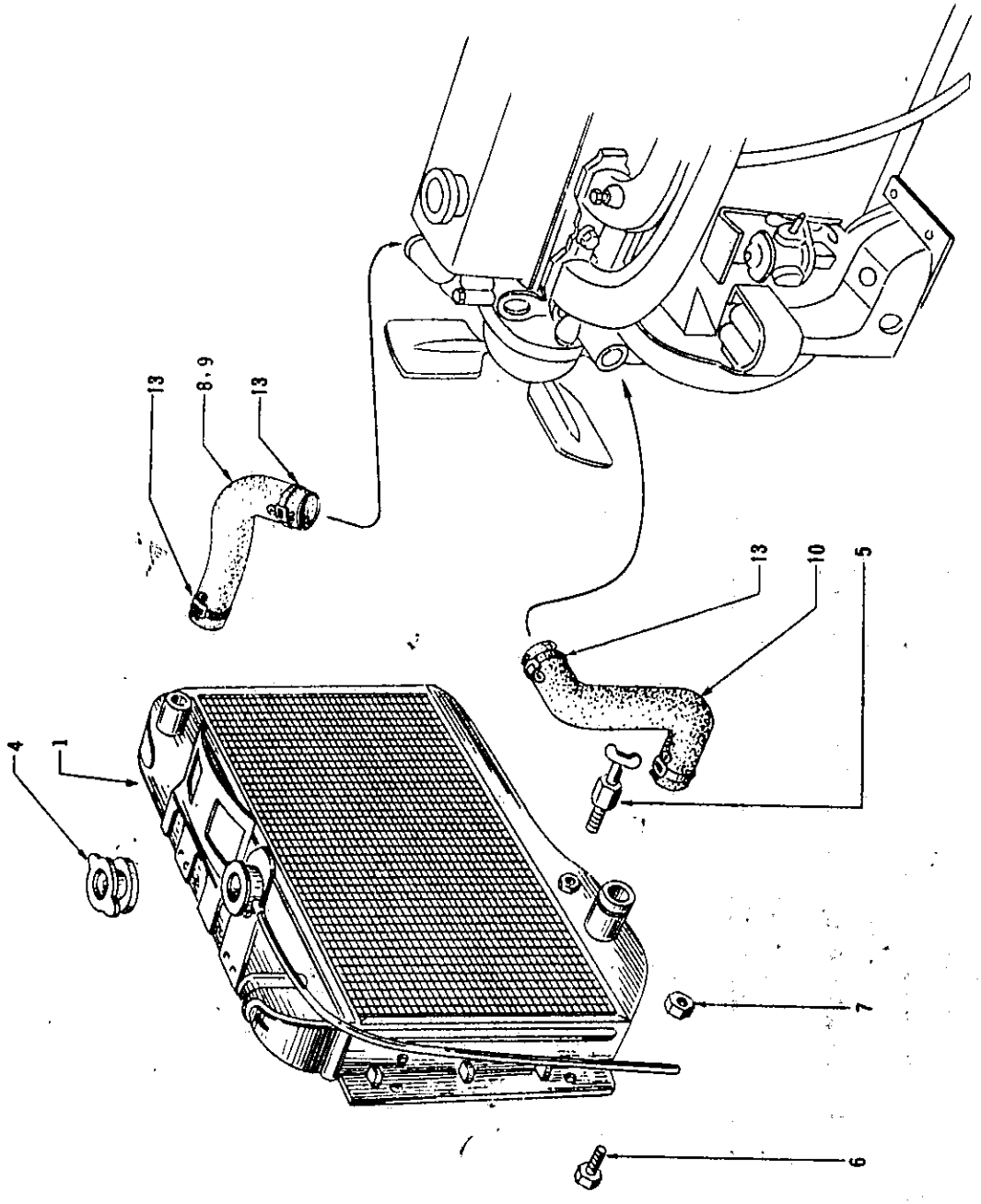

S	KEY NO.	PART NO.	PART NAME	Q'TY	SALES UNIT	MODEL	ICA
			RADIATOR				
*	1	21400-10600	ASSY-RADIATOR	1		410	
	2	21400-10601	ASSY-RADIATOR	1		410	Y
	3	21400-13210	ASSY-RADIATOR (FROM SEPT.-64)	1		410	N
	4	21430-10600	ASSY-CAP,PRESSURE VALVE	1	10	410	
*	5	21211-08000	COCK-DRAIN	1	5	410	
*	6	00114-51800	BOLT TO FIX RADIATOR	4	50	410	
	7	00912-34510	NUT-SELF LOCK TO FIX RADIATOR	4		410	
	8	21501-10600	HOSE-RADIATOR TO CYLINDER HEAD	1	5	R DRIVE 410	
	9	21501-10800	HOSE-RADIATOR TO CYLINDER HEAD	1	5	L DRIVE 410	
	10	21503-10800	HOSE-RADIATOR TO WATER PUMP USE,FIT ONE	1	5	410	
	11	21503-13900	HOSE-RADIATOR TO WATER PUMP(FROM SEPT.-64)USE,FIT ONE	1	5	410	N
	12	21503-10801	HOSE-RADIATOR TO WATER PUMP (WITH CONNECTOR, HEATER PIPE) USE,FIT ONE	1	5	410	
	13	21504-30000	CLIP-CONNECTOR,OUTER ELBOW TO RADIATOR	4		410	

Printed in Japan

REVISED: SEPTEMBER,1968

NOTE

NOTE

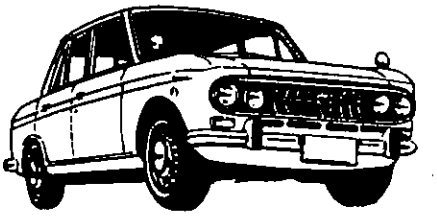

ENGINE MOUNTING

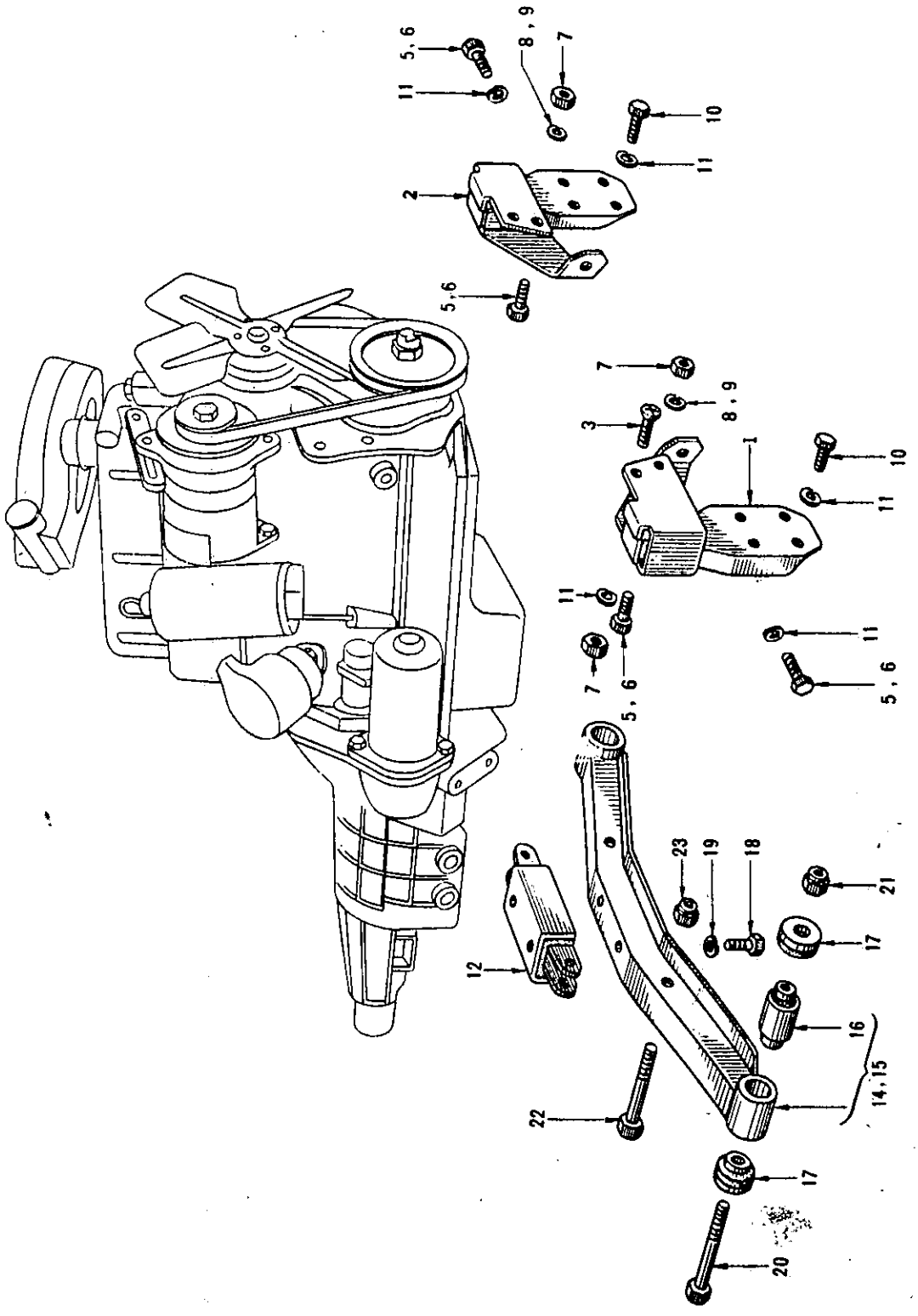

S	KEY NO.	PART NO.	PART NAME	Q'TY	SALES UNIT	MODEL	ICA
			ENGINE MOUNTING				
	1	11222-10600	ASSY-INSULATOR,ENGINE MOUNTING,FRONT(R.H.)	1	1	410	
	2	11223-10600	ASSY-INSULATOR,ENGINE MOUNTING,FRONT(L.H.)	1	1	410	
	3	00134-62210	BOLT	2	25	410	
	4	00134-62510	BOLT(FROM 64-SEPT.)	2	50	410	N
	5	00134-52010	BOLT	4	50	410	
	6	00134-52510	BOLT(FROM 64-SEPT.)	4	100	410	N
	7	00912-44510	NUT-SELF LOCK	4	50	410	
	8	00915-21610	WASHER-LOCK	2		410	
	9	00915-51610	WASHER-PLAIN(FROM 64-SEPT.)	2		410	N
	10	00114-62210	BOLT	6		410	
	11	00915-21610	WASHER-LOCK	6		410	
	12	11322-10601	INSULATOR-ENGINE MOUNTING,REAR	1	1	410	
	13	11322-13201	INSULATOR-ENGINE MOUNTING,REAR(FROM SEPT.-64)	1	1	410	N
	14	11340-10602	ASSY-MEMBER,CROSS,ENGINE MOUNTING REAR	1	-	410	
	15	11340-13251	ASSY-MEMBER,CROSS,ENGINE MOUNTING REAR WITH SPACER(FROM SEPT.-64)	1	1	410	N
	16	11372-10602	BUSHING-ENGINE MOUNTING REAR	2	5	410	
	17	11357-36702	SPACER-BUSHING	4	10	410	
	18	00114-52010	BOLT	2		410	

REVISED: SEPTEMBER,1968

Printed in Japan

NISSAN MOTOR CO., LTD.

S	KEY NO.	PART NO.	PART NAME	QTY	SALES UNIT	MODEL	ICA
	19	30915-11510	WASHER-LOCK	2		410	
	20	00114-78510	BOLT	2	10	410	
	21	00912-34710	NUT-SELF LOCK	2	100	410	
	22	00114-55510	BOLT	2	25	410	
	23	00912-44510	NUT-SELF LOCK	2	50	410	

NOTE

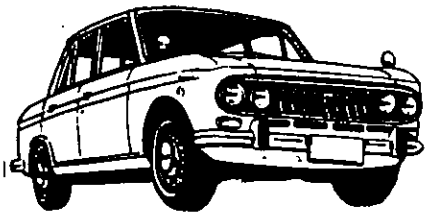

DISTRIBUTOR (HITACHI) (TO E/# E1-635918)

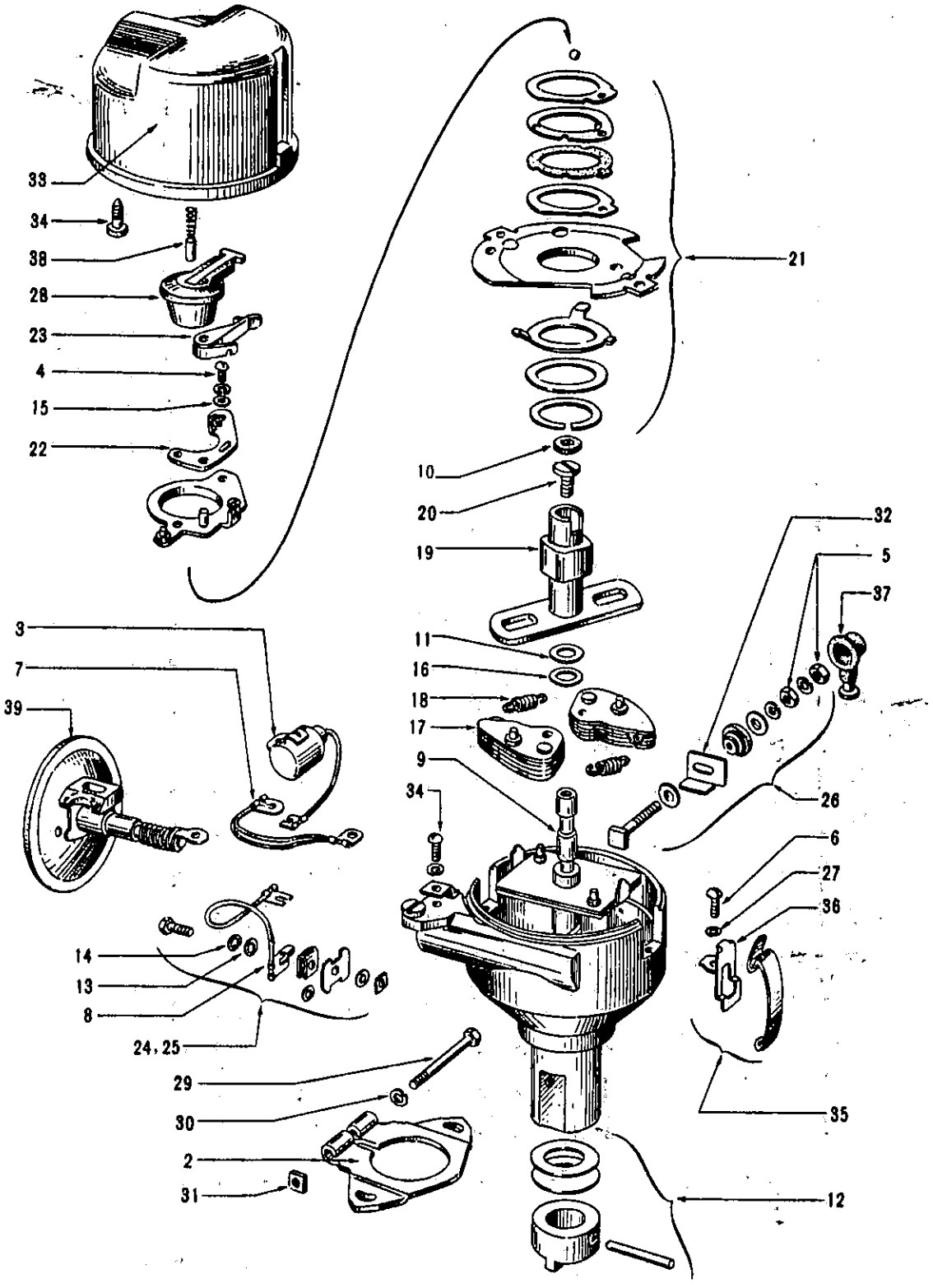

DISTRIBUTOR (HITACHI) (TO E/# E1-635918)

S	KEY NO.	PART NO.	PART NAME	Q'TY	SALES UNIT	MODEL	ICA
	1	22100-08300	ASSY-DISTRIBUTOR(D406-01)(UP TO E/# 635918)	1		410	
	2	22180-30100	ASSY-PLATE,FIXING	1	10	410	
*	3	22102-50000	ASSY-CONDENSER,DISTRIBUTOR	1	10	410	
*	4	22132-85060	SCREW(4)	3	2	410	
	5	22155-86160	NUT	2	10	410	
	6	23553-25660	SCREW(4)	2	10	410	
	7	22182-30101	ASSY-WIRE,EARTH	1		410	
*	8	22183-30100	ASSY-WIRE,LEAD	1	50	410	
	9	22108-30102	ASSY-SHAFT,DISTRIBUTOR	1	1	410	
	10	22116-50000	FELT-DISTRIBUTOR	1		410	
	11	22184-50000	WASHER-THRUST(0.5T)	1	10	410	
	12	22119-03020	ASSY-COUPLING,DISTRIBUTOR	1	1	410	
	13	22122-85060	WASHER-PLAIN	1	10	410	
	14	22185-85060	WASHER-LOCK	1	20	410	
	15	22185-50000	WASHER-PLAIN	3	50	410	
	16	22117-30100	WASHER-THRUST	AR		410	
	17	22132-30100	WEIGHT-GOVERNOR	2	1	410	
	18	22127-03020	SET-SPRING,GOVERNOR	1	10	410	
	19	22132-08300	ASSY-CAM,DISTRIBUTOR	1	1	410	
*	20	22139-85060	SCREW	1	10	410	
	21	22136-30101	ASSY-BREAKER,CONTACT	1	5	410	
*	22	22143-50000	ASSY-POINT,BREAKER	1		410	

Printed in Japan

REVISED: SEPTEMBER,1968

FIG. 22 NISSAN MOTOR CO., LTD.

S	KEY NO.	PART NO.	PART NAME	Q'TY	SALES UNIT	MODEL	ICA
*	23	22146-10360	ASSY-ARM,CONTACT	1	10	410	
*	24	22403-03020	ASSY-TERMINAL(1)	1	10	410	
	25	22403-03021	ASSY-TERMINAL(1)	1	10	410	Y
	26	22195-03020	ASSY-TERMINAL(2)	1	5	410	
	27	22156-85060	WASHER-LOCK	1	10	410	
	28	22157-50001	ASSY-HEAD,ROTOR	1	10	410	
	29	22201-30100	BOLT(6)	1	50	410	
	30	22203-50000	WASHER-LOCK	1		410	
	31	22204-30100	NUT(6)	1	1	410	
*	32	22205-30100	PLATE-INSULATING	1	10	410	
	33	22162-30104	ASSY-CAP,DISTRIBUTOR	1	2	410	
	34	22206-30100	SCREW-CABLE SET	5	10	410	
	35	22167-03020	CLAMP-CAP	2	5	410	
*	36	22168-30100	PLATE-HINGE,CLAMP	2		410	
*	37	22171-30100	NIPPLE-RUBBER	1	10	410	
	38	22165-30101	ASSY-POINT,CARBON	1	10	410	
	39	22301-08300	ASSY-CONTROL,VACUUM	1	1	410	

REVISED: SEPTEMBER,1968

Printed in Japan

NOTE

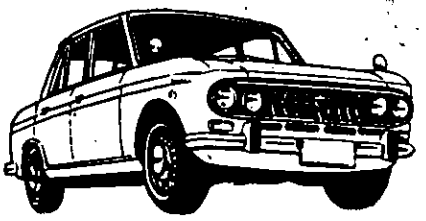

DISTRIBUTOR (HITACHI) (FROM E/# E1-635919)

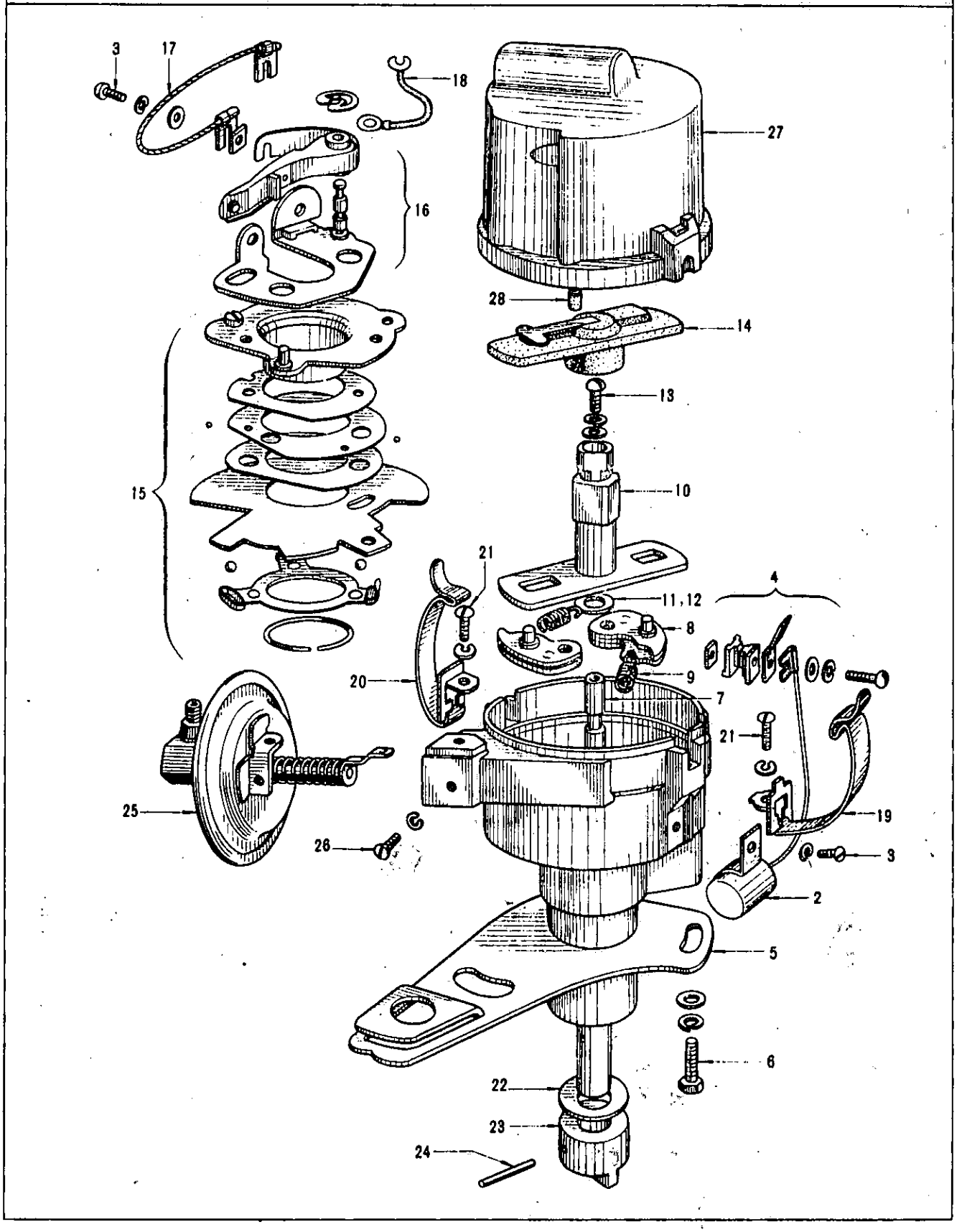

DISTRIBUTOR (HITACHI) (FROM E/# E1-635919)

S	KEY NO.	PART NO.	PART NAME	Q'TY	SALES UNIT	MODEL	ICA
	1	22100-13301	ASSY-DISTRIBUTOR(D406-51)	1		410	
*	2	22102-00800	ASSY-CONDENSER	1	10	410	
*	3	22132-85060	SCREW	2	2	410	
	4	22403-13201	ASSY-TERMINAL	1	10	410	
	5	22180-13201	PLATE-FIXING	1	5	410	
	6	22201-71300	BOLT 5	1	10	410	
	7	22108-13201	ASSY-SHAFT	1	1	410	
	8	22109-71300	ASSY-WEIGHT,GOVERNOR	2		410	
*	9	22110-13301	SET-SPRING,GOVERNOR	1	10	410	
	10	22132-13301	SET-CAM	1	2	410	
	11	22117-32200	WASHER-THRUST	1		410	
	12	22118-85060	WASHER-THRUST(0.8 T)	1	1	410	
	13	22103-50000	SCREW	1	10	410	
	14	22157-71300	ASSY-HEAD,ROTOR	1	10	410	
	15	22136-71300	ASSY-BRAKER,CENTER	1	2	410	
*	16	22145-71300	SET-CONTACT	1	1	410	
	17	22183-71300	ASSY-WIRE,LEAD	1	10	410	
	18	22182-71300	ASSY-WIRE,EARTH	1	10	410	
	19	22167-71300	ASSY-CLAMP,CAP(1)	1	10	410	
	20	22168-71300	ASSY-CLAMP,CAP(2)	1	50	410	
	21	22103-50000	SCREW 4	2	10	410	
	22	22118-43800	WASHER-THRUST	1		410	
	23	22119-13201	ASSY-COUPLING	1	5	410	

Printed in Japan

REVISED: SEPTEMBER,1968

S	KEY NO.	PART NO.	PART NAME	Q'TY	SALES UNIT	MODEL	ICA
	24	22121-71300	PIN-COUPLING	1	50	410	
	25	22301-13301	ASSY-CONTROL,VACUUM	1	1	410	
*	26	22139-85060	SCREW 4	2	10	410	
	27	22162-13201	ASSY-CAP,DISTRIBUTOR	1		410	
	28	22165-30101	ASSY-POINT,CARBON	1	10	410	

REVISED: SEPTEMBER,1968

Printed in Japan

NOTE

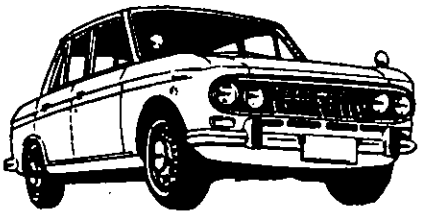

DISTRIBUTOR (MITSUBISHI) (SS)

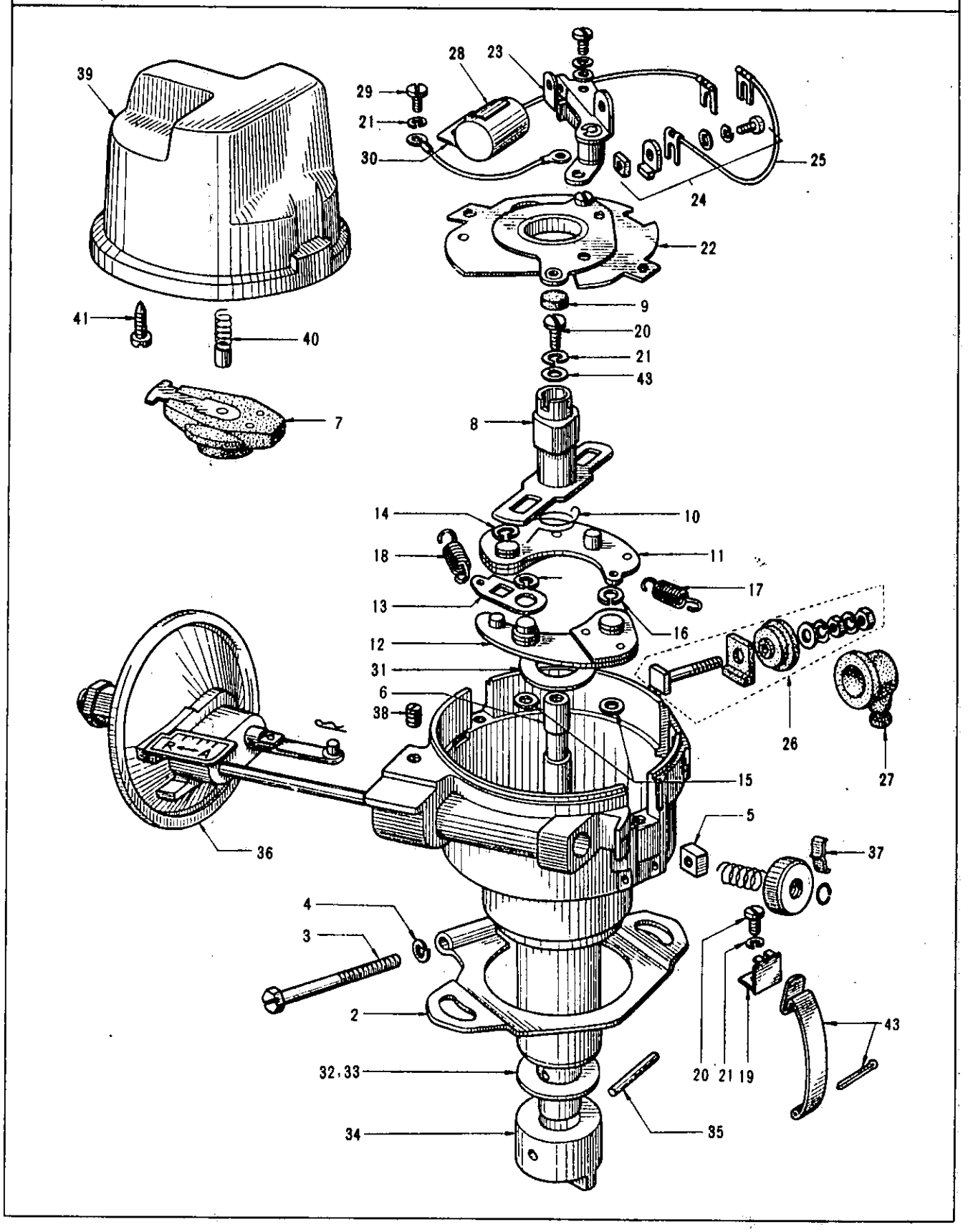

DISTRIBUTOR (MITSUBISHI) (SS)

S	KEY NO.	PART NO.	PART NAME	Q'TY	SALES UNIT	MODEL	ICA
	1	22100-10605	ASSY-DISTRIBUTOR(MITSUBISHI,TVB-4ML)	1		SS 410	
	2	22179-01302	ASSY-PLATE,FIXING	1	10	SS 410	
	3	22201-01302	BOLT 6	1	10	SS 410	
	4	22203-01302	WASHER 6	1		SS 410	
	5	22204-01302	NUT 6	1	50	SS 410	
	6	22108-10610	ASSY-SHAFT	1	1	SS 410	
	7	22157-01302	ASSY-HEAD,ROTOR	1	10	SS 410	
	8	22132-10610	ASSY-CAM	1	2	SS 410	
	9	22116-01302	FELT-CAM	1		SS 410	
	10	22186-01302	SPRING-HAIR PIN	1	10	SS 410	
	11	22123-01302	ASSY-WEIGHT,GOVERNOR	1	10	SS 410	
	12	22210-10610	ASSY-WEIGHT,GOVERNOR	1	10	SS 410	
	13	22124-10610	LEVER-GOVERNOR	1	50	SS 410	
	14	22211-10610	STOPPER	1	5	SS 410	
	15	22184-01302	WASHER 6.7	2	50	SS 410	
	16	22147-32210	STOPPER	2	10	SS 410	
	17	22127-10610	SPRING-GOVERNOR	1	10	SS 410	
	18	22128-10610	SPRING-GOVERNOR	1	10	SS 410	
	19	22107-01302	BADGE-L	2	1	SS 410	
	20	23139-85060	SCREW 4	5	10	SS 410	
	21	22156-01302	WASHER 4	6		SS 410	
	22	22136-10610	ASSY-BREAKER,CONTACT	1	2	SS 410	
	23	22140-10610	SET-POINT	1	10	SS 410	

Printed in Japan

REVISED: SEPTEMBER,1968

S	KEY NO.	PART NO.	PART NAME	QTY	SALES UNIT	MODEL	ICA
	24	22212-10610	ASSY-TERMINAL	1		SS 410	
	25	22183-10610	ASSY-WIRE,LEAD	1	10	SS 410	
	26	22403-01302	ASSY-TERMINAL	1		SS 410	
	27	22171-01302	CAP-GUM	1		SS 410	
	28	22102-01303	CONDENSER	1		SS 410	
	29	23132-85060	SCREW 4	1	10	SS 410	
	30	22182-10610	ASSY-WIRE,EARTH	1	10	SS 410	
	31	22118-10610	WASHER 12.2	1		SS 410	
	32	22117-10610	WASHER 12.2	1		SS 410	
	33	22308-10610	WASHER 12.2	1		SS 410	
	34	22119-10610	COUPLING-DISTRIBUTOR	1		SS 410	
	35	22121-01302	PIN-KNOCK	1	50	SS 410	
	36	22301-10610	ASSY-CONTROL,VACUUM	1		SS 410	
	37	22198-01302	SPRING-SHAKEPROOF	1		SS 410	
	38	22313-01302	SCREW-SET,VACUUM CONTROL	1	10	SS 410	
	39	22162-01302	ASSY-CAP,DISTRIBUTOR	1	2	SS 410	
	40	22165-10610	ASSY-POINT,CARBON	1		SS 410	
	41	22206-01302	SCREW-SET,CORD	5	5	SS 410	
	42	22167-01302	CLAMP-CAP,DISTRIBUTOR	2	2	SS 410	
	43	22152-01302	WASHER	3	10	SS 410	

Printed in Japan

REVISED: SEPTEMBER,1968

NOTE

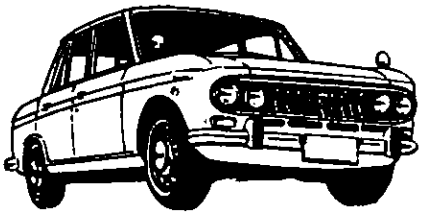

ALTERNATOR (MITSUBISHI)

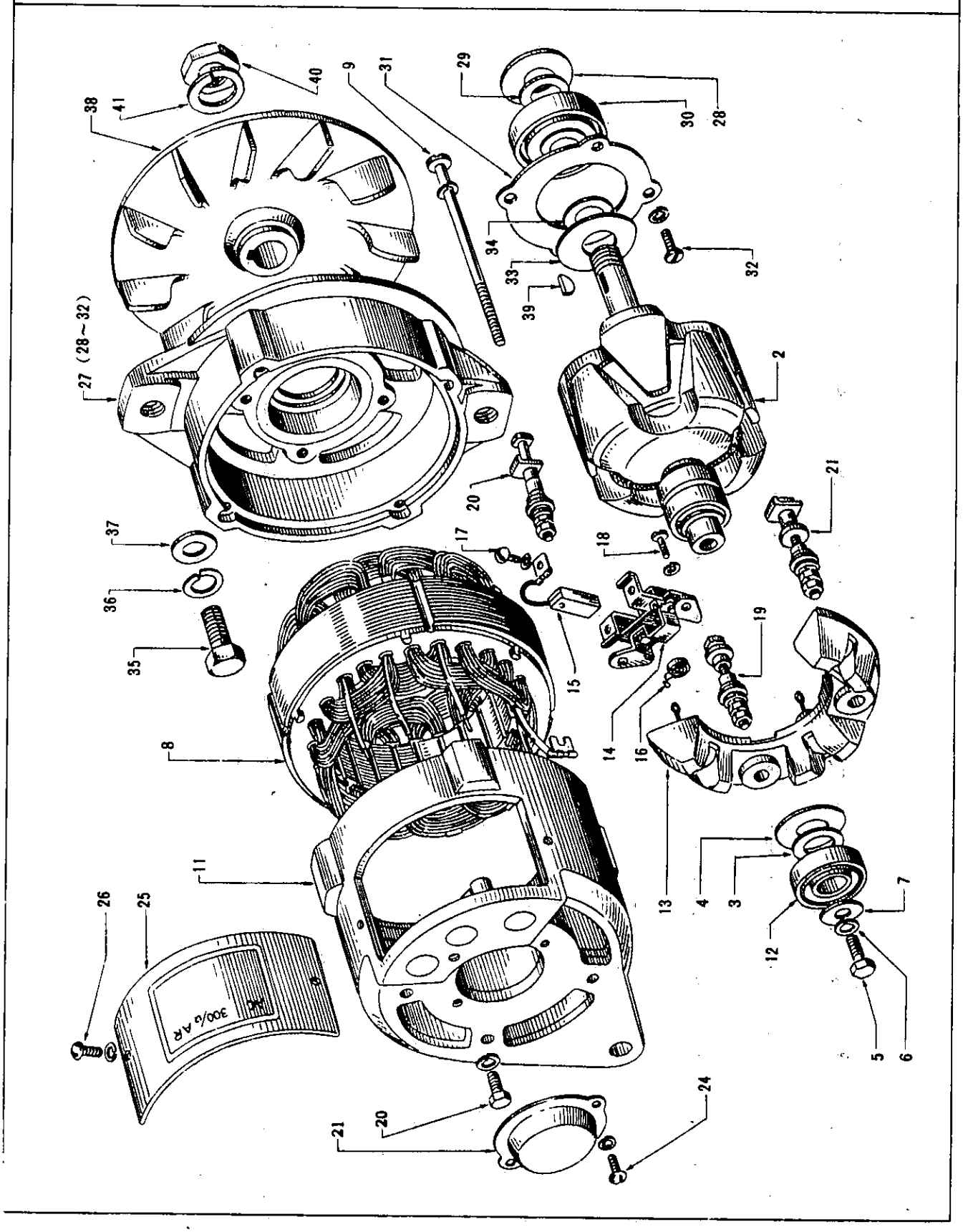

S	KEY NO.	PART NO.	PART NAME	Q'TY	SALES UNIT	MODEL	ICA
			ALTERNATOR (MITSUBISHI)				
	1	23100-61200	ASSY-ALTERNATOR(12V-30 0W)	1		410	
	2	23108-12210	ASSY-ROTOR	1	1	410	
*	3	23116-12210	WASHER	1	5	410	
	4	23117-12210	WASHER	1	10	410	
	5	23220-12210	SCREW(6)	1	10	410	
	6	23221-12210	WASHER	1	1	410	
	7	22203-01302	WASHER-BEARING	1		410	
	8	23102-12210	ASSY-STAYTOR	1	1	410	
	9	23131-12210	BOLT-THROUGH	4	10	410	
	10	23127-12211	ASSY-COVER,REAR	1		410	
	11	23183-12210	COVER-REAR,WITH DIODES	1	1	410	
	12	23129-12210	BEARING-BALL	1	5	410	
	13	23230-12210	ASSY-DIODE SET	1		410	
	14	23133-12210	ASSY-HOLDER,BRUSH	1	5	410	
	15	23135-12210	ASSY-BRUSH	2	10	410	
	16	23138-12210	SPRING-BRUSH	2	1	410	
	17	23139-85060	SCREW	2	10	410	
	18	23352-09610	SCREW	2	1	410	
	19	23156-12210	ASSY-TERMINAL(A)	1	10	410	
	20	23158-12210	ASSY-TERMINAL(F)	1	10	410	
	21	23196-12210	ASSY-TERMINAL(N)	1	5	410	
	22	23139-12210	BOLT-TO FIX BRACKET	1	10	410	
	23	23130-12210	COVER-BEARING	1	10	410	

Printed in Japan

REVISED: SEPTEMBER,1968

S	KEY NO.	PART NO.	PART NAME	Q'TY	SALES UNIT	MODEL	ICA
	24	23139-85060	SCREW	2	10	410	
*	25	23107-61200	COVER-BRUSH	1	1	410	
	26	23139-85060	SCREW	2	10	410	
	27	23118-12210	ASSY-COVER,FRONT	1	1	410	
	28	23121-12210	WASHER	1	10	410	
	29	23122-12210	WASHER	1	10	410	
	30	23120-12210	BEARING-BALL	1	1	410	
	31	23123-12210	RETAINER-BEARING	1	10	410	
	32	23352-09610	SCREW	2	1	410	
	33	23121-12210	WASHER	1	10	410	
	34	23122-12210	WASHER	1	10	410	
	35	23164-12210	BOLT-SETTING	1	10	410	
	36	23160-12210	WASHER	1	10	410	
*	37	23109-12210	WASHER	1	10	410	
	38	23151-61200	PULLEY	1	1	410	
	39	23195-12210	KEY	1	10	410	
	40	23153-12210	NUT	1	10	410	
	41	23152-12210	WASHER(17)	1	10	410	

Printed in Japan

REVISED: SEPTEMBER,1968

NOTE

STARTER MOTOR (HITACHI) (TO JAN-65)

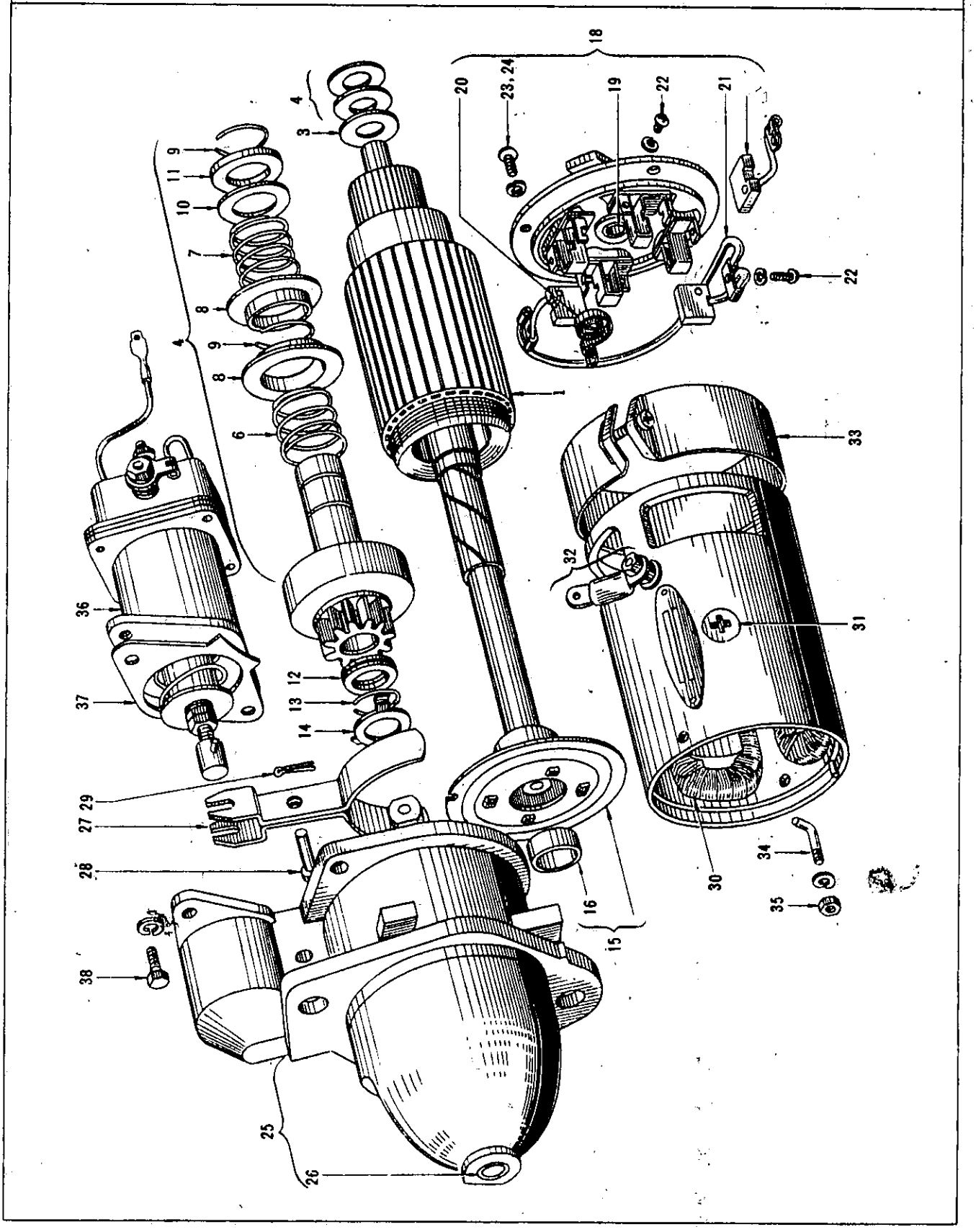

STARTER MOTOR (HITACHI) (TO JAN-65)

S	KEY NO.	PART NO.	PART NAME	Q'TY	SALES UNIT	MODEL	ICA
*	1	23300-09500	ASSY-MOTOR,STARTER	1		410	
	2	23310-09500	ASSY-ARMATURE	1		410	
	3	23339-09500	WASHER-THRUST	1		410	
	4	23321-09900	WASHER-THRUST	3	10	410	
	5	23312-09500	ASSY-PINION & CLUTCH	1		410	
	6	23442-09600	SPRING-PINION(1)	1		410	
	7	23443-09600	SPRING-PINION(2)	1	10	410	
	8	23374-09500	SLEEVE-PINION	2	2	410	
	9	23372-09600	CLIP-PINION SLEEVE	2	10	410	
	10	23444-09600	STOPPER-SPRING	1		410	
	11	23351-09600	WASHER-SLEEVE	1		410	
	12	23369-43600	STOPPER-PINION	1	10	410	
	13	23373-43600	CLIP-PINION STOPPER	1	5	410	
	14	23370-09600	WASHER-PINION STOPPER	1	10	410	
	15	23383-09500	ASSY-BEARING,CENTER	1	2	410	
	16	23441-09500	BEARING-METAL	1	10	410	
*	17	23337-09500	ASSY-COVER,REAR	1		410	
	18	23337-09501	ASSY-COVER,REAR	1		410	Y
	19	23338-09900	BEARING-METAL	1	1	410	
	20	23333-09900	SPRING-BRUSH	4	10	410	
*	21	23380-09902	ASSY-BRUSH(+)	1	10	410	
	22	23547-25660	SCREW(3)	2	10	410	
	23	23103-50000	SCREW(4)	4	1	410	

REVISED: SEPTEMBER,1968

Printed in Japan

S	KEY NO.	PART NO.	PART NAME	Q'TY	SALES UNIT	MODEL	ICA
	24	23139-85060	SCREW(4)(USE TO 23337-09501)	4	10	410	N
	25	23318-09500	ASSY-CASE,GEAR	1		410	
	26	23319-09600	BEARING-METAL	1	5	410	
	27	23322-09500	ASSY-LEVER,SHIFT,PINION	1	1	410	
	28	23323-09500	PIN-SHIFT LEVER	1	10	410	
	29	23391-43300	PIN-COTTER	1	10	410	
	30	23306-09500	ASSY-COIL,FIELD	1		410	
	31	23305-09500	SCREW-SET,POLE CORE	4	10	410	
	32	23384-09601	ASSY-TERMINAL	1	1	410	
	33	23342-09901	ASSY-COVER,BRUSH	1	1	410	
	34	23352-09600	BOLT-JOINT	2		410	
	35	23393-09900	NUT	2	10	410	
	36	23343-09500	ASSY-SWITCH,MAGNETIC	1		410	
	37	23445-09600	COVER-DUST	1	5	410	
	38	22201-09600	BOLT	2	10	410	

REVISED: SEPTEMBER,1968

Printed in Japan

NOTE

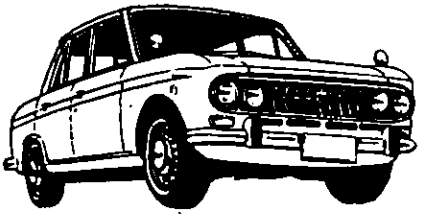

STARTER MOTOR (HITACHI) (FROM FEB-65)

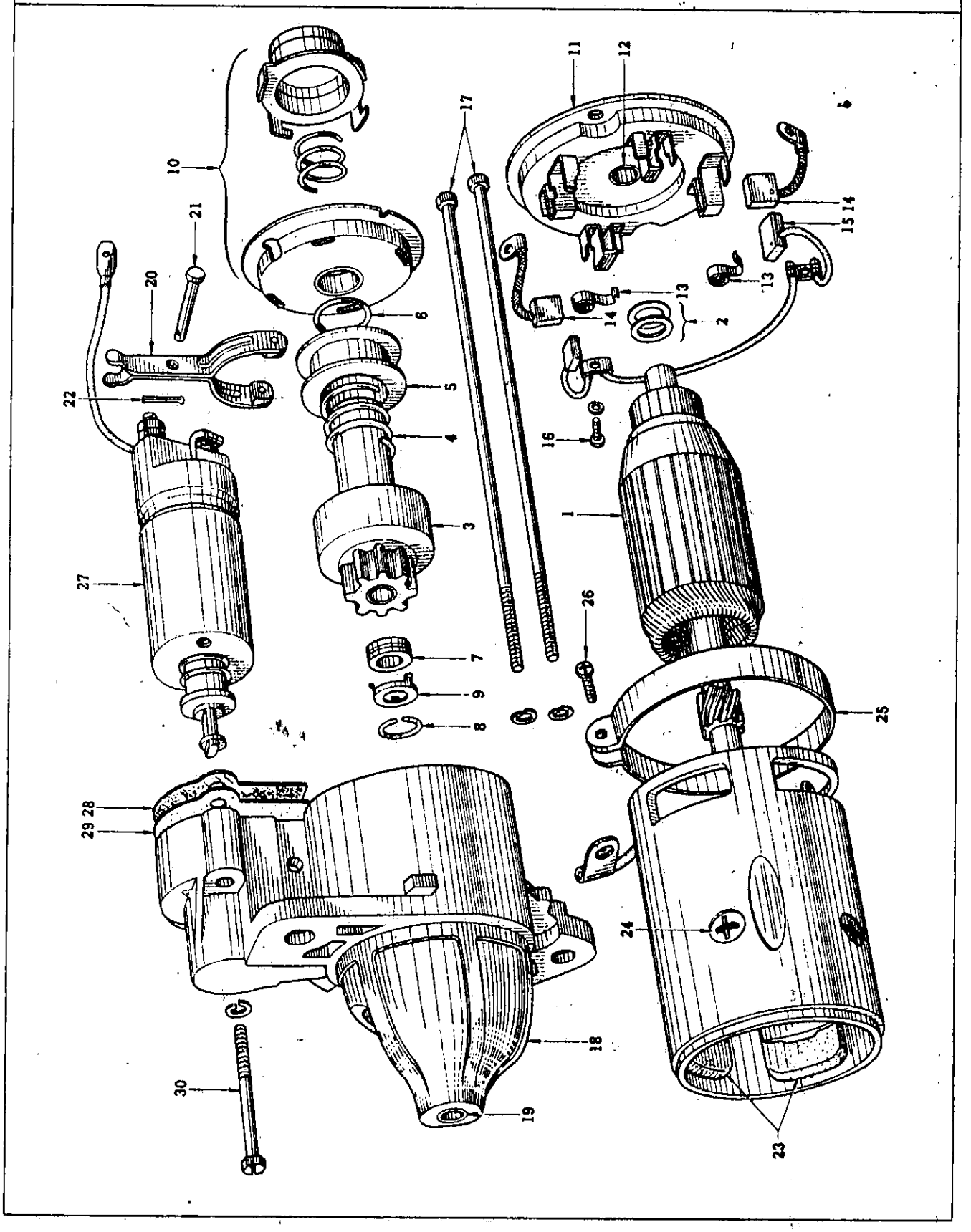

SEPTEMBER, 1968 Printed in Japan

STARTER MOTOR (HITACHI) (FROM FEB-65)

S	KEY NO.	PART NO.	PART NAME	Q'TY	SALES UNIT	MODEL	ICA
	0-1	23300-10600	ASSY-MOTOR STARTER (S114-92) (FROM FEB-65)	1		410	
*	1	23310-10600	ASSY-ARMATURE	1	1	410	
	2	23321-09900	WASHER-THRUST	2	10	410	
	3	23312-10600	ASSY-PINION	1	1	410	
	4	23442-10600	SPRING-PINION	1	5	410	
	5	23374-10600	SLEEVE-PINION	1		410	
	6	23372-10600	CLIP-SLEEVE PINION	1	10	410	
	7	23369-10600	STOPPER-PINION	1	5	410	
	8	23353-10600	CLIP-STOPPER PINION	1		410	
	9	23370-09600	WASHER-STOPPER PINION	1	10	410	
	10	23383-10600	ASSY-BEARING,CENTER	1		410	
	11	23337-10600	ASSY-COVER,REAR	1		410	
	12	23338-09900	METAL-BEARING	1	1	410	
	13	23333-09900	SPRING-BRUSH	4	10	410	
*	14	23380-09900	BRUSH(+)	2		410	
	15	23379-09900	BRUSH(-)	2	10	410	
	16	23547-25660	SCREW 3	2	10	410	
	17	23340-10600	BOLT-THROUGH	2	10	410	
	18	23318-10600	ASSY-CASE,GEAR	1		410	
	19	23319-10600	METAL-BEARING	1	10	410	
	20	23322-10600	ASSY-LEVER,PINION SHIFT	1	1	410	
	21	23323-10600	PIN-LEVER SHIFT	1	10	410	
	22	23391-43300	PIN-COTTER 1	1	10	410	
	23	23306-10600	ASSY-COIL,FIELD	1	1	410	

FIG. **27** NISSAN MOTOR CO., LTD.

S	KEY NO.	PART NO.	PART NAME	QTY	SALES UNIT	MODEL	ICA
	24	23305-09500	SCREW-SET,POLE CORE	4	10	410	
	25	23309-10600	ASSY-COVER,BRUSH	1	1	410	
*	26	23132-50900	SCREW 4	1		410	
	27	23343-10600	ASSY-SWITCH,MAGNETIC	1	1	410	
	28	23445-10600	COVER-DUST	1	10	410	
	29	23446-10600	PACKING	1		410	
	30	22201-10600	BOLT 5	1	10	410	

Printed in Japan

REVISED: SEPTEMBER,1968

NOTE

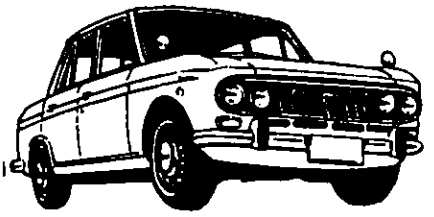

HIGH TENTION CABLE & ELECTRICAL PARTS MOUNTING

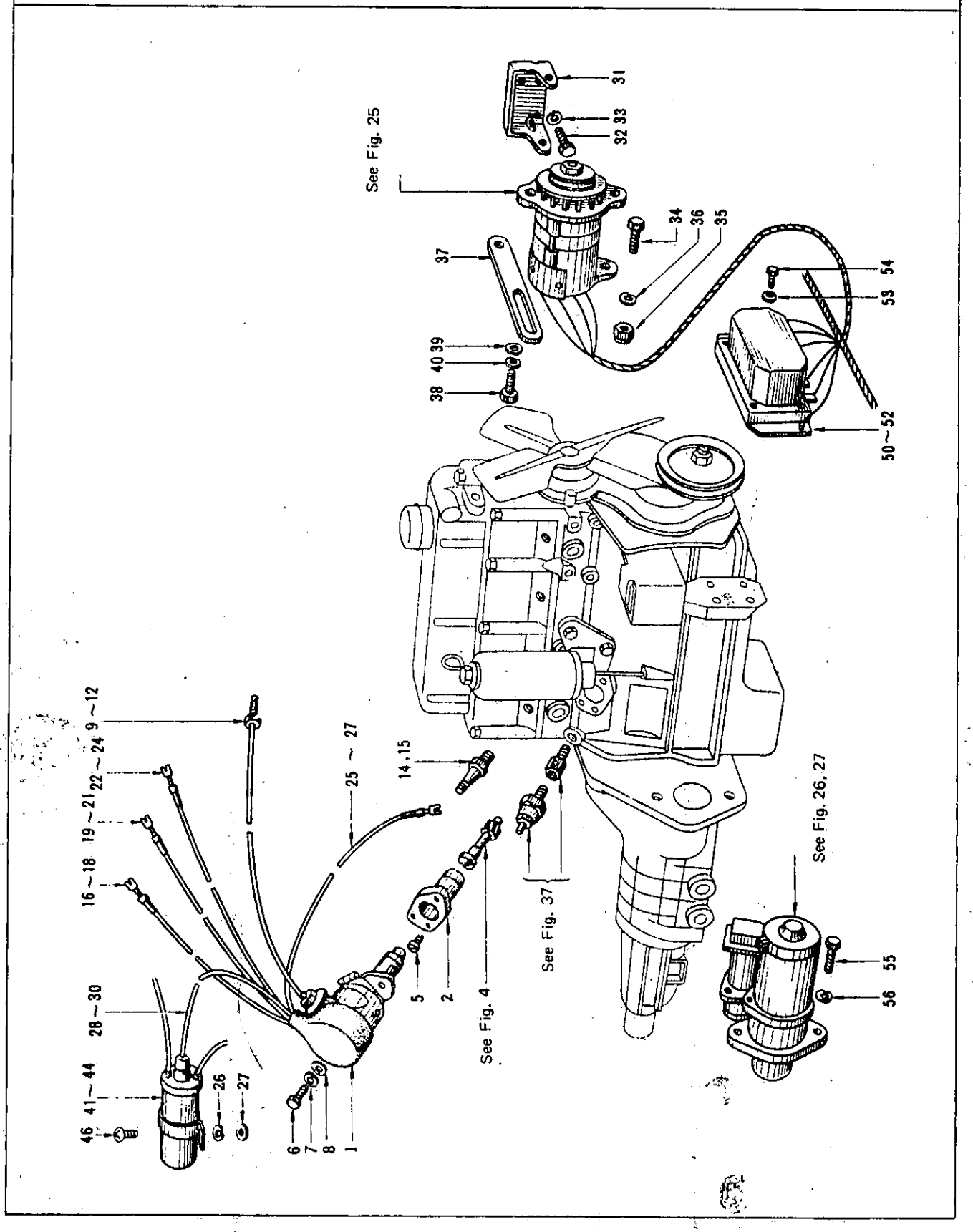

S	KEY NO.	PART NO.	PART NAME	Q'TY	SALES UNIT	MODEL	ICA
			HIGH TENTION CABLE & ELECTRICAL PARTS MOUNTING				
	1	22172-30100	PROTECTOR-DISTRIBUTOR	1	5	410	
	2	22178-30000	HOUSING-DISTRIBUTOR	1	1	410	
	3	22178-13200	SUPPORT-DISTRIBUTOR(FROM E/# E1-635919)	1	10	410	N
	4	22179-10600	GASKET-DISTRIBUTOR SUPPORT	1	50	410	
	5	00324-41610	SCREW(HOUSING TO CRANK CASE)	1	50	410	
	6	00114-42010	BOLT TO FIX DISTRIBUTOR TO HOUSING	2	10	410	
	7	00915-11410	WASHER-LOCK TO FIX DISTRIBUTOR TO HOUSING	2		410	
	8	00915-41410	WASHER-PLAIN TO FIX DISTRIBUTOR TO HOUSING	2		410	
	9	22318-01300	ASSY-TUBE,VACUUM CONTROL	1	1	410(EXC.SS)	
	10	22318-13200	ASSY-TUBE,VACUUM CONTROL(FROM E/# E1-635919)	1	1	410(EXC.SS)	Y
	11	22318-10605	ASSY-TUBE,VACUUM CONTROL	1		410	
	12	22318-14400	ASSY-TUBE,VACUUM CONTROL(FROM E/# E1-635919)	1	5	SS 410	Y
	13	22208-13200	ADJUSTER-ECCENTRIC ADVANCE	1	10	410	
	14	22401-58000	PLUG-SPARK(N,G,K,B-6E) USE,FIT ONE	4		410	
	15	22401-58001	PLUG-SPARK(N,G,K,B-4E) USE,FIT ONE	4		410	
	16	22410-01300	ASSY-CABLE,HIGH TENSION(NO.1)	1	5	410	

Printed in Japan

REVISED: SEPTEMBER,1968

S	KEY NO.	PART NO.	PART NAME	QTY	SALES UNIT	MODEL	ICA
	17	22451-10800	ASSY-CABLE,HIGH TENSION(NO.1)	1	1	410	
	18	22451-13200	ASSY-CABLE,HIGH TENSION(NO.1)(FROM E/# E1-635919)	1		410	
	19	22452-10600	ASSY-CABLE,HIGH TENSION(NO.2)	1		410	
	20	22452-10800	ASSY-CABLE,HIGH TENSION(NO.2)	1	1	410	
	21	22452-13200	ASSY-CABLE,HIGH TENSION(NO.2)(FROM E/# E1-635919)	1		410	
	22	22414-01300	ASSY-CABLE,HIGH TENSION(NO.3)	1		410	
	23	22453-10800	ASSY-CABLE,HIGH TENSION(NO.3)	1	1	410	Y
	24	22453-13200	ASSY-CABLE,HIGH TENSION(NO.3)(FROM E/# E1-635919)	1		410	N
	25	22454-10600	ASSY-CABLE,HIGH TENSION(NO.4)	1		410	
	26	22454-10800	ASSY-CABLE,HIGH TENSION(NO.4)	1	1	410	Y
	27	22454-13200	ASSY-CABLE,HIGH TENSION(NO.4)(FROM E/# E1-635919)	1		410	N
	28	22450-08800	ASSY-CABLE,HIGH TENSION(COIL TO DISTRIBUTOR)	1		410	
	29	22450-10800	ASSY-CABLE,HIGH TENSION(COIL TO DISTRIBUTOR)	1		410	Y
*	30	22450-13200	ASSY-CABLE,COIL TO DISTRIBUTOR(FROM E/# E1-635919)	1		410	N
	31	23168-10600	BRACKET-MOUNTING,ALTERNATOR	1	5	410	
	32	00134-51810	BOLT TO FIX BRACKET	3	50	410	

Printed in Japan

REVISED: SEPTEMBER,1968

S	KEY NO.	PART NO.	PART NAME	Q'TY	SALES UNIT	MODEL	ICA
	33	00915-11510	WASHER-LOCK TO FIX BRACKET	3		410	
	34	00134-53010	BOLT TO FIX ALTERNATOR TO BRACKET	2	100	410	
	35	00911-24510	NUT TO FIX ALTERNATOR TO BRACKET	2	100	410	
	36	00915-11510	WASHER-LOCK TO FIX ALTERNATOR TO BRACKET	2		410	
	37	23174-10600	BAR-ADJUSTING,ALTERNATOR	1	5	410	
	38	00134-52510	BOLT TO FIX BAR	1	100	410	
	39	00915-51510	WASHER-PLAIN TO FIX BAR	1	50	410	
	40	00915-11510	WASHER-LOCK TO FIX BAR	1		410	
*	41	22433-31300	COIL-IGNITION(12V)	1		410	
*	42	22433-14900	COIL-IGNITION(12V)(FROM E/# E1-635919)	1	1	410	N
*	43	22433-10605	COIL-IGNITION(12V,HITACHI)	1	10	SS 410	
*	44	22433-14400	COIL-IGNITION(12V,HITACHI)(FROM E/# E1-635919)	1	1	SS 410	N
	45	22460-14400	RESISTOR-IGNITION COIL	1	1	SS 410	
	46	00314-41210	SCREW TO FIX IGNITION COIL	2	50	410	
	47	00915-11410	WASHER-LOCK TO FIX IGNITION COIL	2		410	
	48	00915-41410	WASHER-PLAIN TO FIX IGNITION COIL	2		410	
	49	24023-10605	ASSY-CABLE	1	1	SS 410	
*	50	23500-12200	REGULATOR-VOLTAGE(12V-300W)(MITSUBISHI)	1	1	410	
	51	23500-12201	REGULATOR-VOLTAGE(12V-300W)(MITSUBISHI)	1		410	Y

Printed in Japan

REVISED: SEPTEMBER,1968

S	KEY NO.	PART NO.	PART NAME	Q'TY	SALES UNIT	MODEL	ICA
*	52	23500-10600	REGULATOR-VOLTAGE(12V-300W)(HITACHI)	1	1	410	
	53	00915-11410	WASHER-LOCK TO FIX REGULATOR TO DASH PANEL	2		410	
	54	00314-41610	SCREW TO FIX REGULATOR TO DASH PANEL	2	50	410	
	55	00124-63510	BOLT TO FIX STARTER MOTOR	2	25	410	
	56	00915-21610	WASHER TO FIX STARTER MOTOR	2		410	
	57	23174-10800	BAR-ADJUSTING,GENERATOR	1	1	OP 410	
	58	00134-52510	BOLT	1	100	OP 410	
	59	00915-51510	WASHER-PLAIN	1	50	OP 410	
	60	00915-11510	WASHER-LOCK	1		OP 410	
*	61	21121-10800	SPACER-BRACKET,IDLER PULLEY	1	2	410	
	62	21121-10801	SPACER-BRACKET,IDLER PULLEY	1	5	410	C
*	63	21110-10800	ASSY-PULLEY,IDLER	1		410	
	64	21110-10801	ASSY-PULLEY,IDLER	1	10	410	C
	65	21112-10800	SHAFT-IDLER PULLEY	1	10	410	
	66	21112-10801	SHAFT-IDLER PULLEY	1	5	410	N
	67	21113-10800	COLLAR-IDLER PULLEY	1		410	
*	68	21114-10800	BEARING-IDLER PULLEY	1		410	
	69	21114-10801	BEARING-IDLER PULLEY	1		410	Y
	70	21115-10800	STOPPER-BEARING	1	5	410	
	71	21116-10800	WASHER-SPECIAL	1	10	410	
	72	21120-10800	BRACKET-IDLER PULLEY	1	1	410	
	73	00915-41610	WASHER-PLAIN	1		410	

Printed in Japan

REVISED: SEPTEMBER,1968

S	KEY NO.	PART NO.	PART NAME	Q'TY	SALES UNIT.	MODEL	ICA
	74	00915-11610	WASHER-LOCK	1		410	
	75	00911-34610	NUT	1	50	410	
	76	21117-10800	PLATE-IDLER PULLEY,FRONT	1		410	
	77	21118-10800	PLATE-IDLER PULLEY,REAR	1	5	410	
	78	00134-54010	BOLT TO FIX BRACKET TO FRONT PLATE	1	50	410	
	79	00912-44510	NUT TO FIX BRACKET TO FRONT PLATE	1	50	410	

Printed in Japan

REVISED: SEPTEMBER,1968

NOTE

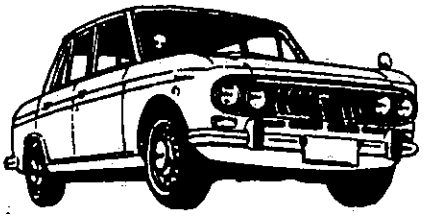

NOTE

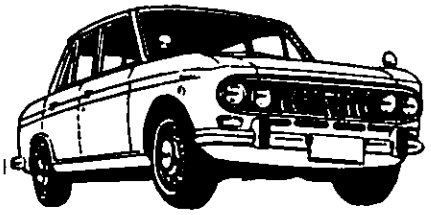

WIRING

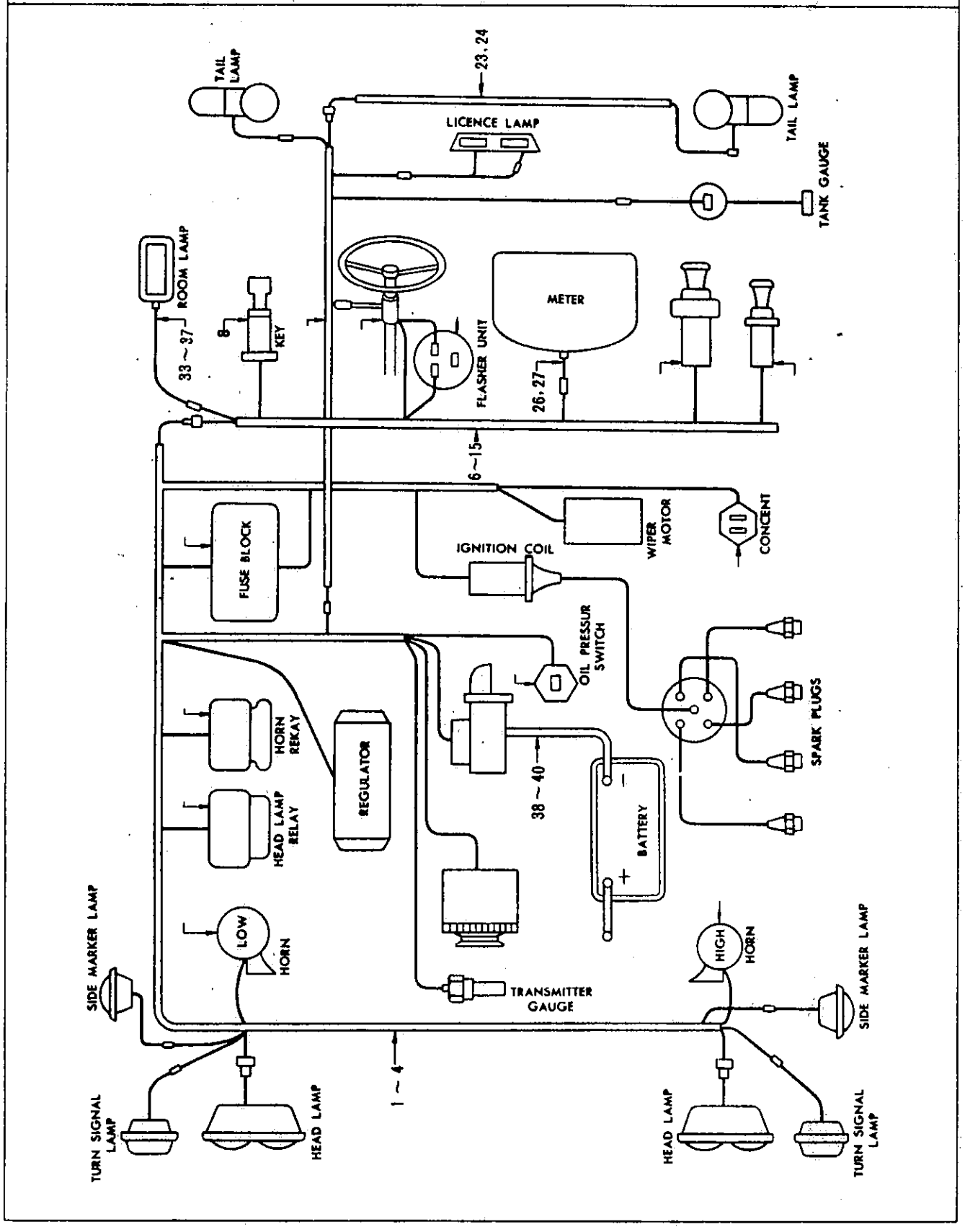
TAIL LAMP
23, 24
LICENCE LAMP
TAIL LAMP
TANK GAUGE
ROOM LAMP
33 ~ 37
B
KEY
FLASHER UNIT
METER
26, 27
6 ~ 15
FUSE BLOCK
IGNITION COIL
WIPER MOTOR
CONCENT
OIL PRESSUR SWITCH
SPARK PLUGS
HORN RELAY
REGULATOR
HEAD LAMP RELAY
38 ~ 40
BATTERY
SIDE MARKER LAMP
LOW
HORN
HIGH
HORN
SIDE MARKER LAMP
TRANSMITTER GAUGE
1 ~ 4
TURN SIGNAL LAMP
HEAD LAMP
HEAD LAMP
TURN SIGNAL LAMP

S	KEY NO.	PART NO.	PART NAME	Q'TY	SALES UNIT	MODEL	ICA
			WIRING				
	1	24012-10600	COMP.-CABLE,ENGINE ROOM HARNESS	1		410(EXC.FINLAND)	
	2	24012-13200	COMP.-CABLE,ENGINE ROOM HARNESS(FROM SEPT.-64)	1		410(EXC.FINLAND)	N
	3	24012-10800	COMP.-CABLE,ENGINE ROOM HARNESS	1		410 (FOR FINLAND)	
	4	24011-10800	COMP.-CABLE,ENGINE ROOM HARNESS	1		410 (FOR FINLAND)	
	5	24252-10600	GROMMET-RUBBER	1	5	410	
	6	24013-12401	COMP.-CABLE,INSTRUMENT HARNESS	1		R DRIVE 4 SPEED,SS 410	
	7	24013-14300	COMP.-CABLE,INSTRUMENT HARNESS (FROM SEPT.-64)	1		R DRIVE 4 SPEED 410, SS 410	N
	8	24013-10800	COMP.-CABLE,INSTRUMENT HARNESS	1	1	L DRIVE, 410 (EXC. FINLAND)	
	9	24013-10801	COMP.-CABLE,INSTRUMENT HARNESS	1		L DRIVE, 410 (EXC. FINLAND)	N
	10	24013-13300	COMP.-CABLE,INSTRUMENT HARNESS(FROM SEPT.-64)	1		L DRIVE, 410 (EXC, FINLAND)	N
	11	24013-12502	COMP.-CABLE,INSTRUMENT HARNESS	1		L DRIVE, 410 (EXC, FINLAND)	
	12	24013-12400	COMP.-CABLE,INSTRUMENT HARNESS	1	1	R DRIVE 410	
	13	24013-12401	COMP.-CABLE,INSTRUMENT HARNESS	1		R DRIVE 410	N

Printed in Japan

REVISED: SEPTEMBER,1968

S	KEY NO.	PART NO.	PART NAME	Q'TY	SALES UNIT	MODEL	ICA
	14	24013-12501	COMP.-CABLE,INSTRUMENT HARNESS	1		L DRIVE 4 SPEED 410	
	15	24013-14400	COMP.-CABLE,INSTRUMENT HARNESS(FROM SEPT.-64)	1		L DRIVE 4 SPEED 410	N
	16	24255-10600	GROMMET-RUBBER(FOR INSTRUMENT HARNESS)	1	5	410	
	17	24014-10601	COMP.-CABLE,CHASSIS HARNESS	1		410	
	18	24254-10600	GROMMET-RUBBER(FOR CHASSIS HARNESS)	1	10	410	
	19	00369-01210	SCREW FOR CHASSIS HARNESS EARTH	1	50	410	
	20	00915-11010	WASHER-LOCK FOR CHASSIS HARNESS EARTH	1	100	410	
	21	24253-10600	GROMMET-RUBBER	1	10	410	
	22	24149-12400	ASSY-CABLE,REVERSE LAMP SWITCH	1		410	
	23	24015-10600	COMP.-CABLE,TAIL HARNESS	1		410	
	24	24016-10900	COMP.-CABLE,COMBINATION LAMP	1	1	WAGON 410	
	25	24175-11500	ASSY-CABLE,CONCENT	1		OP 410	
	26	24035-10600	ASSY-CABLE,METER HARNESS	1		410	
*	27	25035-10600	ASSY-CABLE,METER HARNESS	1	1	410	N
	28	26260-30100	ASSY-SOCKET,BULB	9		410	
	29	B6260-10600	ASSY-SOCKET,BULB	7		410	N
	30	26260-30100	ASSY-SOCKET,BULB	9		410	
	31	B0260-10601	ASSY-SOCKET,BULB	2		410	N
	32	24201-10600	CLIP-CABLE	2		410	
	33	24160-11400	ASSY-CABLE,ROOM LAMP	1		410	

Printed in Japan

REVISED: SEPTEMBER,1968

S	KEY NO.	PART NO.	PART NAME	Q'TY	SALES UNIT	MODEL	ICA
	34	24163-11400	ASSY-CABLE,DOOR SWITCH	1		U,UN,WL,WL U,410	
	35	24141-10600	ASSY-CABLE,INSPECTION LAMP	1		U,L,LU,UN, LN,LUN,WL, WLU,410	
	36	24110-10600	ASSY-CABLE,STARTER	1	1	410	
	37	24110-13200	ASSY-CABLE,STARTER(FRO M SEPT.-64)	1		410	N
	38	24080-10600	ASSY-CABLE,BATTERY GRO UND CONNECTION	1		410	
	39	24331-11700	ASSY-CABLE,CONTROL VAL VE	1		R DRIVE A CLUTCH 410	
	40	24331-12100	ASSY-CABLE,CONTROL VAL VE	1		L DRIVE A CLUTCH 410	
	41	25405-34200	ASSY-HOLDER,FUSE,SINGL E	1	1	A CLUTCH 4 10	
*	42	25468-58300	FUSE(5A)	1	100	A CLUTCH 4 10	

Printed in Japan

REVISED: SEPTEMBER,1968

NOTE

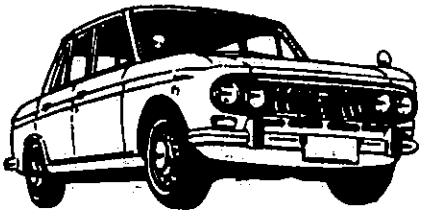

NOTE

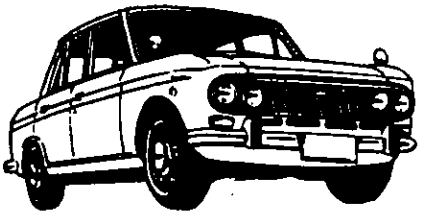

SWITCHES

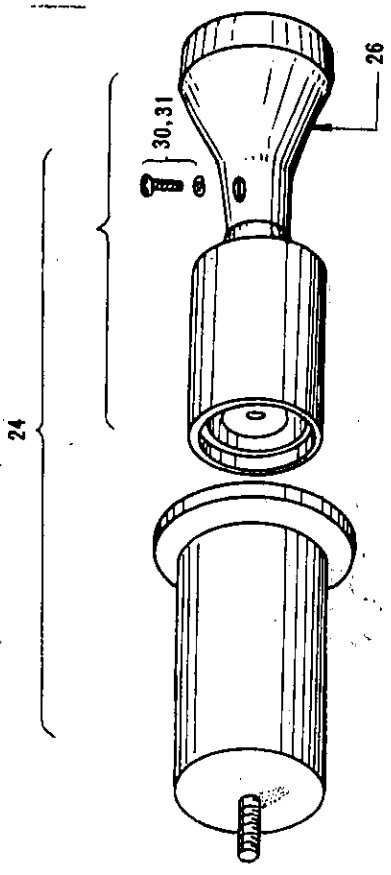

CIGARETTE LIGHTER

S	KEY NO.	PART NO.	PART NAME	Q'TY	SALES UNIT	MODEL	ICA
			SWITCHES				
	1	25150-10600	COMP.-SWITCH,IGNITION & STARTER	1	1	410	
	2	84464-01301	ASSY-CYLINDER,LOCK	1	1	410	
	3	25160-10600	COMP.-SWITCH,LIGHTING(WITHOUT FOG LAMP SWITC H).	1	10	410	
	4	25160-13200	COMP.-SWITCH,LIGHTING(WITHOUT FOG LAMP SWITC H).(FROM SEPT.-64)	1	1	410	N
	5	25160-11400	COMP.-SWITCH,LIGHTING(WITH FOG LAMP SWITCH)	1	10	410(EXC.U. S.A.)	
	6	25160-13201	COMP.-SWITCH,LIGHTING(WITH FOG LAMP SWITCH)(FROM SEPT.-64)	1	1	410(EXC.U. S.A.)	N
	7	25165-10600	ASSY-KNOB,LIGHTING SWI TCH	1	5	410	
	8	25165-13200	ASSY-KNOB,LIGHTING SWI TCH(FROM SEPT.-64)	1	1	410	N
	9	25165-11400	ASSY-KNOB,LIGHTING SWI TCH	1	10	410(EXC.U. S.A.)	
	10	25260-10601	COMP.-SWITCH,WINDSHIEL D WIPER	1		410	
	11	25260-13200	COMP.-SWITCH,WINDSHIEL D WIPER(FROM SEPT.64.)	1		410	N
	12	25265-10600	ASSY-KNOB,WIPER SWITCH	1	10	410	
	13	25265-13200	ASSY-KNOB,WIPER SWITCH (FROM SEPT.-64)	1	5	410	N
*	14	25240-09400	COMP.-SWITCH,OIL PRESS URE	1	1	410	
*	15	25240-89900	COMP.-SWITCH,OIL PRESS URE	1		410	Y

Printed in Japan

REVISED: SEPTEMBER,1968

S	KEY NO.	PART NO.	PART NAME	Q'TY	SALES UNIT	MODEL	ICA
	16	25310-11400	COMP.-SWITCH,REVERSE LAMP	1	10	3 SPEED 410	
	17	25310-09500	COMP.-SWITCH,REVERSE LAMP	1	10	4 SPEED,SS 410	
	18	25319-11400	ARM-OPERATING,REVERSE LAMP	1	10	3 SPEED 410	
	19	25312-55100	WASHER-PLAIN	1	10	4 SPEED,SS 410	
	20	00314-01610	SCREW TO FIX ARM	1	10	410	
	21	00915-11010	WASHER-LOCK TO FIX ARM	1	100	410	
	22	25360-01300	COMP.-SWITCH,DOOR	2		410	
	23	00540-41010	SCREW	4	50	410	
	24	25330-10600	COMP.-LIGHTER,CIGARETTE	1	10	(OP)410	
*	25	25330-13200	COMP.-LIGHTER,CIGARETTE(FROM SEPT.-64)	1		(OP)410	N
	26	25335-10600	ASSY-KNOB,CIGARETTE LIGHTER	1	5	(OP)410	
	27	25540-10600	COMP.-SWITCH,TURN SIGNAL & DIMMER	1		R DRIVE 410	
	28	25540-10800	COMP.-SWITCH,TURN SIGNAL & DIMMER	1	1	L DRIVE 410	
	29	25517-09400	CAP-TURN SIGNAL SWITCH	1	1	410	
	30	00314-00810	SCREW	2	50	410	
	31	00915-11010	WASHER-LOCK	2	100	410	
	32	25516-10601	LEVER-TURN SIGNAL SWITCH	1	5	410	

Printed in Japan

REVISED: SEPTEMBER,1968

NOTE

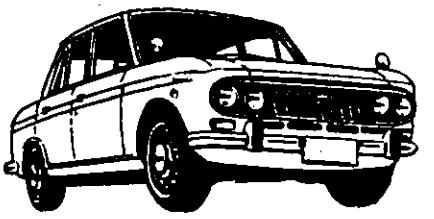

ELECTRIC UNIT

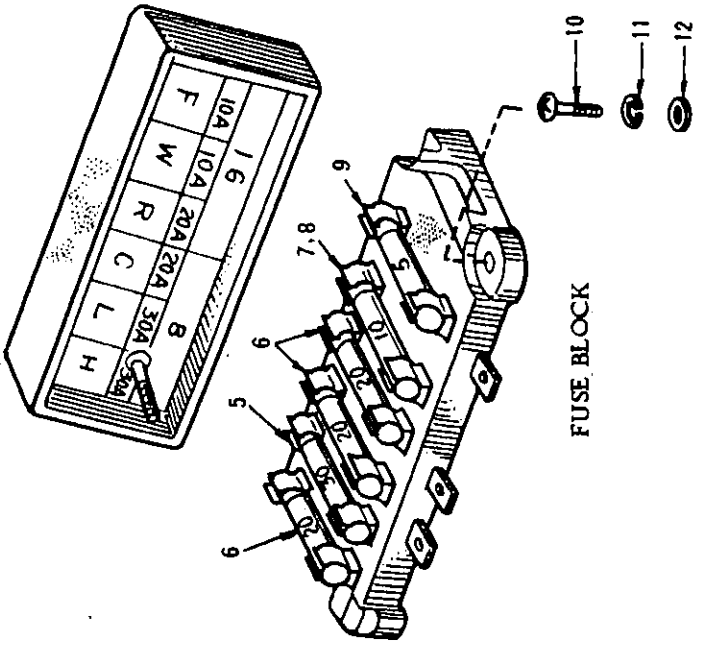

S	KEY NO.	PART NO.	PART NAME	Q'TY	SALES UNIT	MODEL	ICA
			ELECTRIC UNIT				
	1	25410-10601	ASSY-BLOCK,FUSE	1	1	410(EXC.FINLAND)	
*	2	25410-13200	ASSY-BLOCK,FUSE	1		410(EXC.FINLAND)	N
*	3	25410-10801	ASSY-BLOCK,FUSE	1	1	410 (FOR FINLAND)	
*	4	25410-10802	ASSY-BLOCK,FUSE	1		410 (FOR FINLAND)	
*	5	25463-50000	FUSE(30A)	1		410	
*	6	25462-50000	FUSE(20A)	3		410	
*	7	25467-30800	FUSE(8A)	2		410	
*	8	25467-30800	FUSE(8A)	5		410 (FOR FINLAND)	
*	9	25468-58300	FUSE(5A)	4	100	410 (FOR FINLAND)	
	10	00314-02210	SCREW TO FIX FUSE BLOCK TO DASH PANEL UPPER	2	50	410	
	11	00915-11010	WASHER-LOCK TO FIX FUSE BLOCK TO DASH PANEL UPPER	2	100	410	
	12	00915-41010	WASHER-PLAIN TO FIX FUSE BLOCK TO DASH PANEL P&PER	2		410	
	13	25230-10600	COMP.-RELAY,LOWER BEAM	1		410	
	14	25230-13200	COMP.-RELAY,LOWER BEAM (FROM SEPT.-64)	1	1	410	N
	15	00511-21010	SCREW(TO FIX RELAY)	2	50	410	
	16	25520-33500	ASSY-FLASHER UNIT(12V)	1		410	
*	17	25520-13200	ASSY-FLASHER UNIT(12V)	1	10	410	N

Printed in Japan

REVISED: SEPTEMBER.1968

S	KEY NO.	PART NO.	PART NAME	Q'TY	SALES UNIT	MODEL	ICA
	18	00511-01010	SCREW(TO FIX FLASHER UNIT)	1	50	410	
*	19	26310-10601	ASSY-HORN,ELECTRIC(HIGH)	1		410	
*	20	26330-10601	ASSY-HORN,ELECTRIC(LOW)	1	1	410	
	21	00314-52210	BOLT TO FIX HORN	4	50	410	
	22	00915-11510	WASHER-LOCK TO FIX HORN	4		410	
*	23	26320-58000	ASSY-RELAY,HORN(12V)	1	1	410	
	24	00511-21010	SCREW(TO FIX HORN RELAY)	2	50	410	
	25	24190-11500	ASSY-CONCENT	1	10	OP 410	
	26	24195-11500	ASSY-PLUG,CONCENT	1	5	OP 410	

REVISED: SEPTEMBER,1968

Printed in Japan

NOTE

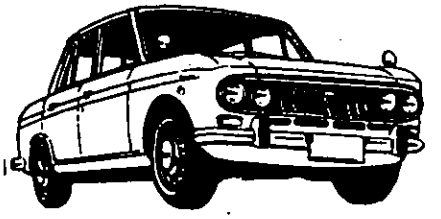

ROOM HEATER

Note: This figure will be given later.

S	KEY NO.	PART NO.	PART NAME	Q'TY	SALES UNIT	MODEL	ICA
			ROOM HEATER				
*	1	27010-11400	KIT-HEATER,ROOM	1		410 R DRIVE	
*	2	27010-13600	KIT-HEATER,ROOM(FROM SEPT.-64)	1		410 R DRIVE	N
	3	27010-10800	KIT-HEATER,ROOM	1		410 L DRIVE	
	4	27010-13300	KIT-HEATER,ROOM(FROM SEPT.-64)	1		410 L DRIVE	N

REVISED: SEPTEMBER,1968

Printed in Japan

NOTE

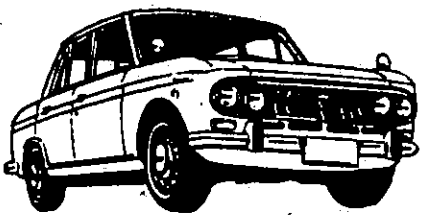

NOTE

RADIO & CLOCK

Note: This figure will be given later.

S	KEY NO.	PART NO.	PART NAME	Q'TY	SALES UNIT	MODEL	ICA
			RADIO & CLOCK				
*	1	27310-11401	SET-RADIO(BLACK)(HITACHI)	1		410 R DRIVE	
	2	27310-11402	SET-RADIO(BLACK)(TOSHIBA)	1		410 R DRIVE	
*	3	27310-10801	SET-RADIO(BLACK)(HITACHI)	1		410 L DRIVE	
	4	27312-11400	SET-ANTENNA	1		410	
*	5	27380-11400	SET-CLOCK	1		OP 410	
	6	27380-13600	SET-CLOCK(FROM SEPT.-64)	1		OP 410	N

REVISED: SEPTEMBER, 1968

Printed in Japan

NOTE

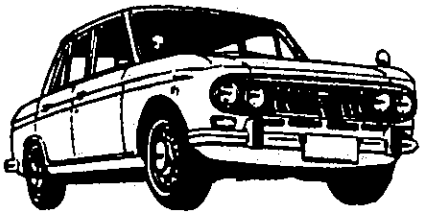

NOTE

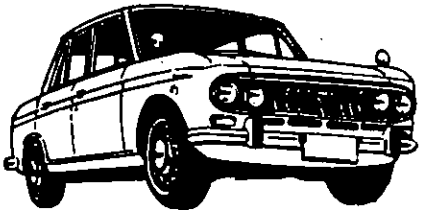

BATTERY

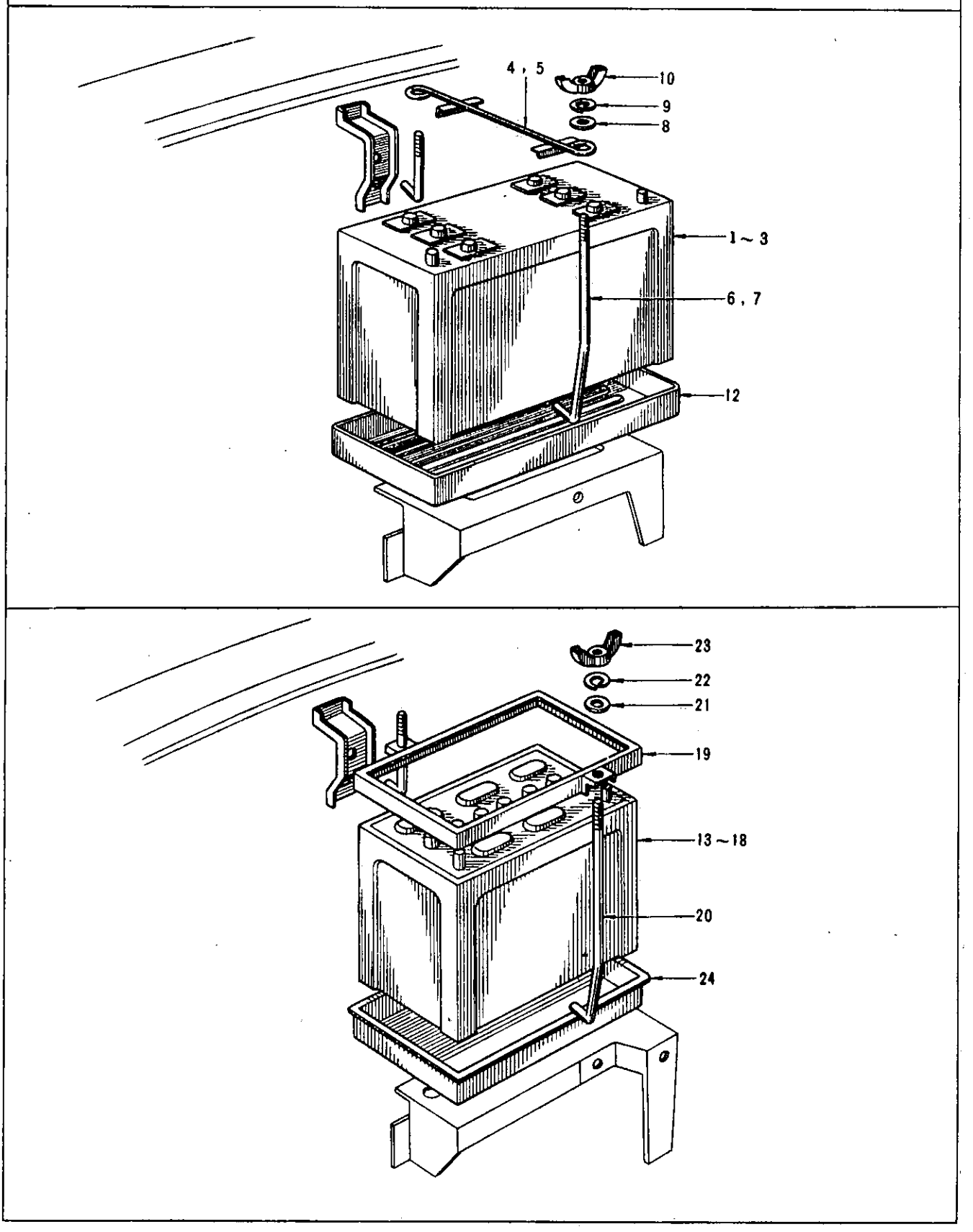

S	KEY NO.	PART NO.	PART NAME	Q'TY	SALES UNIT	MODEL	ICA
			BATTERY				
	1	24410-09401	BATTERY(12V-40AH;H.DRY)	1		410	
	2	24410-09403	BATTERY(12V-40AH;C.DRY)	1		410	
	3	24410-09405	BATTERY(12V-40AH;W.DRY)	1		410	
*	4	24430-10600	ASSY-BAR TO FIX BATTERY	1	1	410	
	5	24430-10601	ASSY-BAR TO FIX BATTERY	1	1	410	Y
*	6	24438-10600	ROD TO FIX BATTERY	1	5	410	
	7	24438-10601	ROD TO FIX BATTERY	1	5	410	N
	8	00915-51410	WASHER-PLAIN TO FIX BATTERY	2		410	
	9	00915-11410	WASHER-LOCK TO FIX BATTERY	2		410	
	10	00913-44410	NUT-WING TO FIX BATTERY	2		410	
	11	24439-10600	ROD-BATTERY FIX A	1		410	
*	12	24428-09400	TRAY-BATTERY(POLYETHYLENE)	1		410	
	13	24410-03021	BATTERY(12V-50AH;H.DRY)	1		OP 410	
	14	24410-03022	BATTERY(12V-50AH;H.WET)	1	1	OP 410	
	15	24410-03023	BATTERY(12V-50AH;C.DRY)	1		OP 410	
	16	24410-03024	BATTERY(12V-50AH;C.WET)	1		OP 410	

Printed in Japan

REVISED: SEPTEMBER,1968

S	KEY NO.	PART NO.	PART NAME	Q'TY	SALES UNIT	MODEL	ICA
	17	24410-03025	BATTERY(12V-50AH;W.DRY)	1		OP 410	
	18	24410-03026	BATTERY(12V-50AH;W.WET)	1		OP 410	
	19	24420-10801	FRAME TO FIX BATTERY	1		OP 410	
*	20	24438-10600	ROD TO FIX BATTERY	1	5	OP 410	
	21	00915-51410	WASHER-PLAIN TO FIX BATTERY	2		OP 410	
	22	00915-11410	WASHER-LOCK TO FIX BATTERY	2		OP 410	
	23	00913-44410	NUT-WING TO FIX BATTERY	2		OP 410	
*	24	24428-03020	TRAY-BATTERY(POLYETHYLENE)	1	1	OP 410	

Printed in Japan

REVISED: SEPTEMBER, 1968

NOTE

WINDSHIELD WIPER

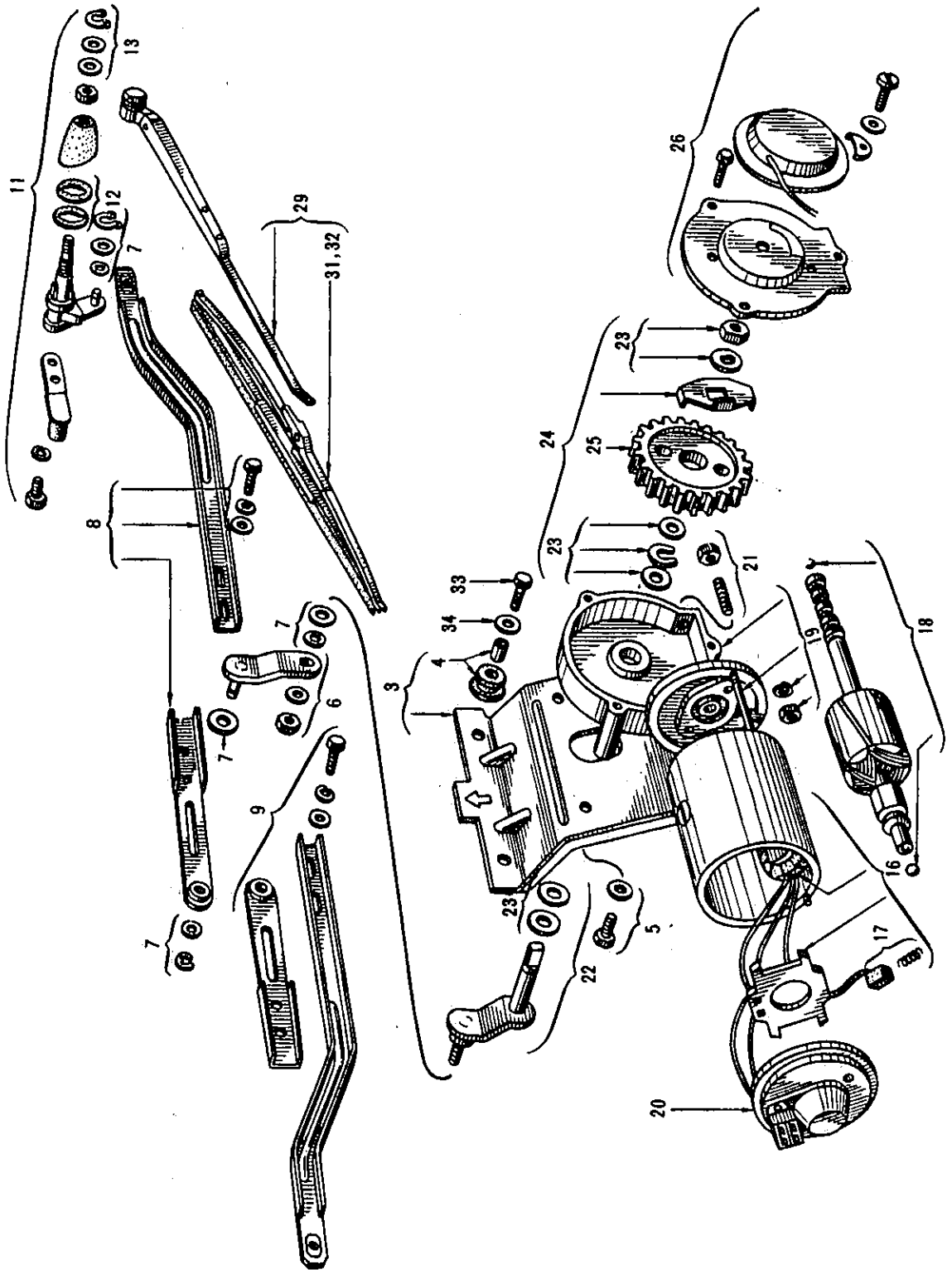

S	KEY NO.	PART NO.	PART NAME	Q'TY	SALES UNIT	MODEL	ICA
			WINDSHIELD WIPER				
	1	26340-10602	ASSY-DRIVE,WINDSHIELD WIPER	1	1	410	
	2	26340-13200	ASSY-DRIVE,WINDSHIELD WIPER(FROM SEPT.-64)	1	1	410	N
	3	26351-10602	ASSY-BRACKET,WIPER MOTER	1		410	
	4	26353-10600	ASSY-CUSHION,RUBBER	4	10	410	
	5	28726-10600	ASSY-FIX,MOTOR TO BRACKET	3	10	410	
*	6	26345-10601	COMP.-ARM,READ,OUTER	1		410	
	7	28727-10600	KIT-WASHER,CONNECTING ROD	1	1	410	
*	8	26348-10601	ASSY-ROD,CONNECTING(L.H.)	1		410	
	9	26347-10601	ASSY-ROD,CONNECTING(R.H.)	1		410	
	10	26371-10601	ASSY-PIVOT,WINDSHIELD WIPER(R.H.)	1		410	
	11	26372-10601	ASSY-PIVOT,WINDSHIELD WIPER(R(L.H.)	1		410	
	12	26373-10601	PACKING-PIVOT	4		410	
	13	28728-10600	KIT- O RING,PIVOT	2	1	410	
	14	26350-10601	ASSY-MOTOR,WINDSHIELD WIPER	1	1	410	
	15	26350-13200	ASSY-MOTOR,WINDSHIELD WIPER(FROM SEPT.-64)	1	1	410	N
	16	28810-10601	ASSY-FIELD COIL,WITH BRUSH HOLDER	1		410	
	17	28817-10600	ASSY-BRUSH,CARBON	2		410	

Printed in Japan

REVISED: SEPTEMBER,1968

S	KEY NO.	PART NO.	PART NAME	Q'TY	SALES UNIT	MODEL	ICA
	18	28815-10600	ASSY-ARMATURE	1		410	
	19	28820-10600	ASSY-CASE,GEAR	1		410	
	20	28821-10600	ASSY-COVER,END	1		410	
	21	28822-10600	ASSY-SCREW,THRUST	1		410	
	22	28845-10600	ASSY-ARM,GEAR	1	1	410	
	23	28848-10600	KIT-WASHER,GEAR SHIFT	1	1	410	
	24	28846-10600	ASSY-WORM,WHEEL	1		410	
	25	28847-10600	WORM-WHEEL GEAR	1		410	
	26	28850-10600	ASSY-STOPPER,AUTO	1		410	
*	27	26360-10600	ASSY-ARM,WITH WIPER BLADE(R.H.)	1		410	
	28	26360-13200	ASSY-ARM,WITH WIPER BLADE(R.H.)(FROM SEPT.-64)	1		410	Y
*	29	26365-10600	ASSY-ARM,WITH WIPER BLADE(L.H.)	1		410	
	30	26365-13200	ASSY-ARM,WITH WIPER BLADE(L.H.)(FROM SEPT.-64)	1		410	Y
*	31	26362-10600	ASSY-BLADE,WINDSHIELD WIPER	2		410	
	32	26362-13200	ASSY-BLADE,WINDSHIELD WIPER(FROM SEPT.-64)	2		410	N
	33	00314-42010	SCREW TO FIX WIPER UNIT	4	50	410	
	34	00915-51410	WASHER-PLAIN TO FIX WIPER UNIT	4		410	

REVISED: SEPTEMBER,1968

Printed in Japan

NOTE

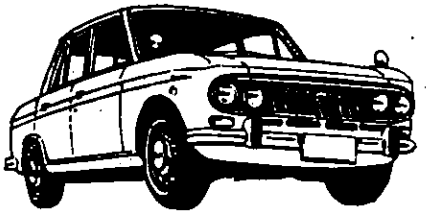

WINDSHIELD WASHER

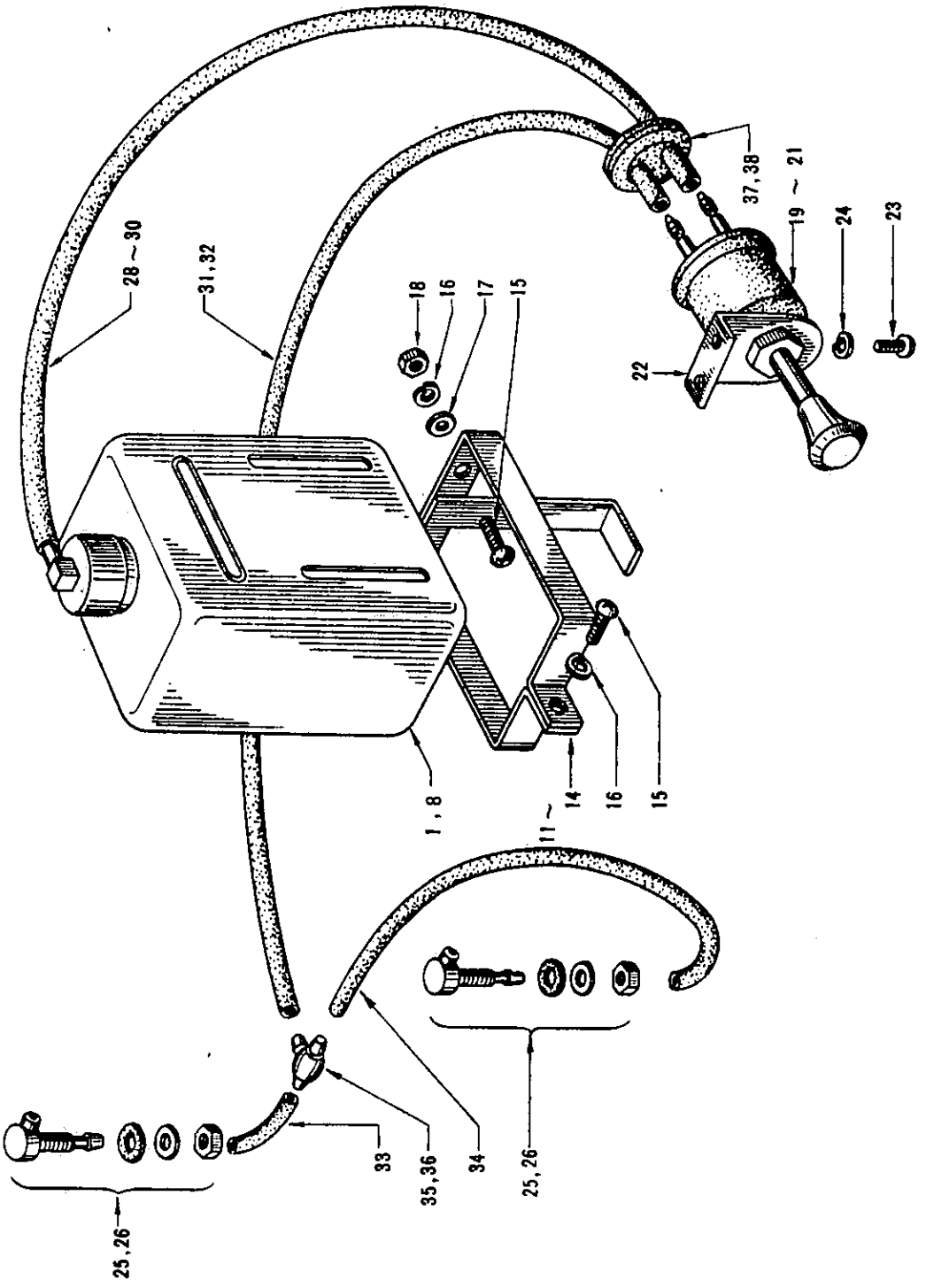

S	KEY NO.	PART NO.	PART NAME	Q'TY	SALES UNIT	MODEL	ICA
			WINDSHIELD WASHER				
*	1	27400-11600	KIT-WASHER,WINDSHIELD	1		U.UN.410	
*	2	27400-11601	KIT-WASHER,WINDSHIELD	1		U.UN.410	Y
*	3	27400-10801	KIT-WASHER,WINDSHIELD	1		L.LU.410	
*	4	27400-10802	KIT-WASHER,WINDSHIELD	1		L.LU.410	Y
*	5	27400-13900	KIT-WASHER,WINDSHIELD(FROM SEPT.-64)	1		L.LU.410	Y
*	6	27400-10621	KIT-WASHER,WINDSHIELD	1		SS 410	
*	7	27400-10622	KIT-WASHER,WINDSHIELD	1		SS 410	Y
*	8	27400-14500	KIT-WASHER,WINDSHIELD(FROM SEPT.-64)	1		SS 410	Y
*	9	27410-10801	ASSY-TANK,WINDSHIELD W ASHER	1		U.UN.L.LU 410	
	10	27410-11401	ASSY-TANK,WINDSHIELD W ASHER	1	1	ALL	Y
*	11	27445-11400	ASSY-BRACKET,TANK	1	1	U.UN.410	
	12	27445-11401	ASSY-BRACKET,TANK	1	1	U.UN.410	Y
	13	27445-10800	ASSY-BRACKET,TANK	1	1	L.LN.410	
	14	27445-10801	ASSY-BRACKET,TANK	1		L.LN.410	Y
	15	00114-41210	BOLT TO FIX BRACKET	2		U.UN.L.LU. 410	
	16	00915-11410	WASHER-LOCK TO FIX BRA CKET	2		U.UN.L.LU. 410	
	17	00915-41410	WASHER-PLAIN TO FIX BR ACKET	2		U.UN.L.LU. 410	
	18	00911-14410	NUT TO FIX BRACKET	2		U.UN.L.LU. 410	
*	19	27430-10600	ASSY-PUMP,WINDSHIELD W ASHER(BLACK)	1		U.UN.L.LU. 410	

REVISED: SEPTEMBER,1968

Printed in Japan

S	KEY NO.	PART NO.	PART NAME	Q'TY	SALES UNIT	MODEL	ICA
*	20	27430-10602	ASSY-PUMP,WINDSHIELD WASHER(BLACK)	1		U.UN.L.LU. 410	N
	21	27430-13600	ASSY-PUMP,WINDSHIELD WASHER(BLACK)(FROM SEPT.-64)	1		U.UN.L.LU. 410	Y
	22	27436-10600	BRACKET-PUMP,WINDSHIELD WASHER(BLACK)	1	2	U.UN.L.LU. 410	
	23	00314-03010	SCREW TO FIX BRACKET	2	50	U.UN.L.LU. 410	
	24	00915-11010	WASHER-LOCK TO FIX BRACKET	2	100	U.UN.L.LU. 410	
*	25	27440-35210	ASSY-NOZZLE,WINDSHIELD WASHER	2	5	U.UN.L.LU. 410	
	26	27440-10600	ASSY-NOZZLE,WINDSHIELD WASHER	2		U.UN.L.LU. 410	Y
*	27	27442-11400	ASSY-VALVE,CHECK	2	1	U.UN.L.LN. 410	
	28	27417-10600	TUBE-INLET(TANK TO PUMP)	1		U.UN.L.LU. 410	
	29	27417-10601	TUBE-INLET(TANK TO PUMP)	1		U.UN.L.LU. 410	N
	30	27417-10620	TUBE-INLET(TANK TO PUMP)	1		SS 410	
	31	27418-10600	TUBE-OUTLET(PUMP TO TEE)	1		U.UN.L.LU. 410	
	32	27418-10601	TUBE-OUTLET(PUMP TO TEE)	1		U.UN.L.LU. 410	N
	33	27419-10600	TUBE-OUTLET(TEE TO NOZZLE R.H.)	1	5	U.UN.L.LU. 410	
	34	27414-10600	TUBE-OUTLET(TEE TO NOZZLE L.H.)	1	5	U.UN.L.LU. 410	
*	35	27416-32800	TEE-TUBE,WINDSHIELD WASHER	1	10	U.UN.L.LU. 410	
	36	27416-10600	TEE-TUBE,WINDSHIELD WASHER	1	10	U.UN.L.LU. 410	N

Printed in Japan

REVISED: SEPTEMBER,1968

S	KEY NO.	PART NO.	PART NAME	Q'TY	SALES UNIT	MODEL	ICA
	37	27428-10600	RUBBER-GROMMET	1	10	U.UN.L.I U. 410	
	38	27428-10601	RUBBER-GROMMET	1	10	U.UN.L.LU. 410	N

NOTE

NOTE

INSTRUMENT METER

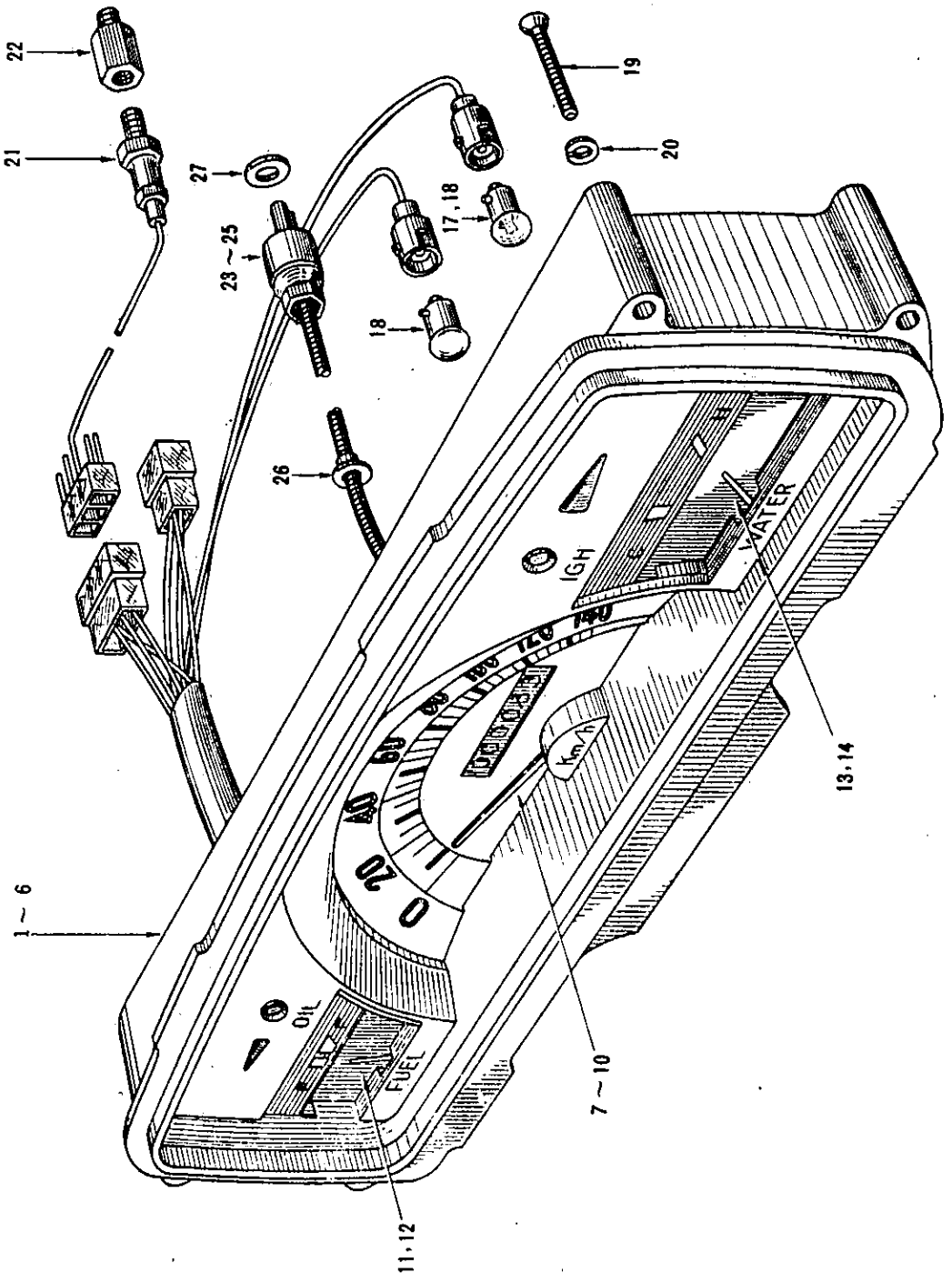

SEPTEMBER, 1968 Printed in Japan

S	KEY NO.	PART NO.	PART NAME	Q'TY	SALES UNIT	MODEL	ICA
			INSTRUMENT METER				
*	1	25010-11601	METER-COMBINED,INSTRUMENT(KM)	1		410	
*	2	25010-11601	METER-COMBINED,INSTRUMENT(KM)W/HARNESS	1		410	Y
	3	24820-13800	METER-COMBINED,INSTRUMENT(KM)(FROM SEPT.-64)	1		410	N
*	4	25010-10801	METER-COMBINED,INSTRUMENT(MILE)	1		410	
	5	24820-10800	METER-COMBINED,INSTRUMENT(MILE)W/HARNESS	1	1	410	Y
	6	24820-13300	METER-COMBINED,INSTRUMENT(MILE)(FROM SEPT.-64)	1		410	N
	7	25050-11601	ASSY-SPEEDOMETER(KM)	1		410	
	8	24850-13800	ASSY-SPEEDOMETER(KM)(FROM SEPT.-64)	1	1	410	N
	9	25050-10801	ASSY-SPEEDOMETER(MILE)	1		410	
	10	24850-13300	ASSY-SPEEDOMETER(MILE)(FROM SEPT.-64)	1		410	N
	11	25060-10600	ASSY-GAUGE,FUEL	1		410	
	12	24860-13200	ASSY-GAUGE,FUEL(FROM SEPT.-64)	1		410	N
	13	25080-10600	ASSY-GAUGE,WATER TEMPERATURE	1		410	
	14	24880-13200	ASSY-GAUGE,WATER TEMPERATURE	1		410	N
	15	25020-13200	ASSY-REGULATOR(FROM SEPT.-64).	1	1	410	
	16	25030-13200	PLATE-PRINTED CIRCUIT(FROM SEPT.-64)	1	1	410	

S	KEY NO.	PART NO.	PART NAME	Q'TY	SALES UNIT	MODEL	ICA
	17	26261-30100	BULB(FOR INSTRUMENT METER,WHITE,1.5W)	5		410	
	18	26261-10600	BULB(FOR INSTRUMENT METER,BLUE,3W)	4		410	
	19	00314-05010	SCREW TO FIX COMBINED METER	4	50	410	
	20	00915-11010	WASHER-LOCK TO FIX COMBINED METERW'	4	100	410	
	21	25250-30100	COMP.-TRANSMITTER,THERMAL	1	10	410	
	22	25251-30100	NUT-GRAND,THERMAL TRANSMITTER	1	10	410	
*	23	25055-10601	ASSY-SHAFT,FLEXIBLE,SPEEDOMETER	1		R DRIVE 410	
*	24	25055-10602	ASSY-SHAFT,FLEXIBLE,SPEEDOMETER	1		R DRIVE 410	Y
*	25	25055-10800	ASSY-SHAFT,FLEXIBLE,SPEEDOMETER	1	10	L DRIVE 410	
	26	24051-10600	GROMMET-RUBBER	1		410	
	27	25021-02700	PACKING-FLEXIBLE SHAFT	1	10	410	

REVISED: SEPTEMBER,1968

Printed in Japan

NOTE

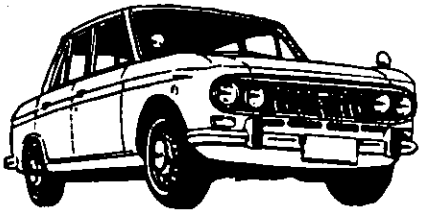

HEAD LAMP

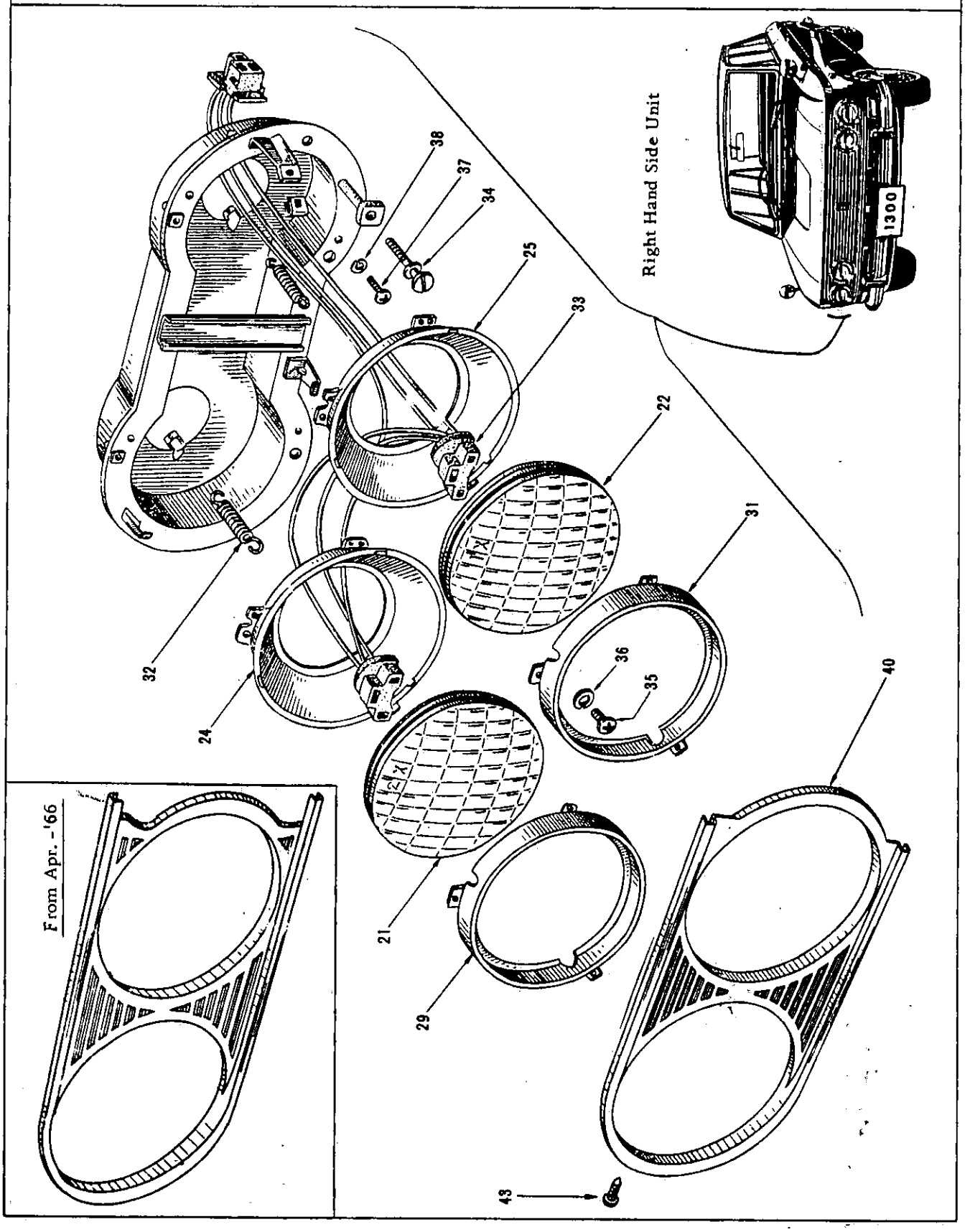
Right Hand Side Unit
1300
From Apr.-'66
38
37
34
25
33
22
31
32
24
36
35
40
21
29
43

S	KEY NO.	PART NO.	PART NAME	QTY	SALES UNIT	MODEL	ICA
			HEAD LAMP				
*	1	26010-10600	ASSY-LAMP,HEAD(R.H.)	1		R DRIVE 41 0	
	2	26010-10601	ASSY-LAMP,HEAD(R.H.)	1		R DRIVE 41 0	Y
	3	26010-10603	ASSY-LAMP,HEAD(R.H.)	1		R DRIVE 41 0	Y
*	4	26010-14000	ASSY-LAMP,HEAD(R.H.)(FROM SEPT.-64)	1		R DRIVE 41 0	N
	5	26010-14001	ASSY-LAMP,HEAD(R.H.)	1		R DRIVE 41 0	Y
*	6	26010-10800	ASSY-LAMP,HEAD(R.H.)	1		L DRIVE 41 0	
	7	26010-10801	ASSY-LAMP,HEAD(R.H.)	1		L DRIVE 41 0	Y
	8	26010-10803	ASSY-LAMP,HEAD(R.H.)	1		L DRIVE 41 0	Y
*	9	26010-13900	ASSY-LAMP,HEAD(R.H.)(FROM SEPT.-64)	1		L DRIVE 41 0	N
	10	26010-13901	ASSY-LAMP,HEAD(R.H.)	1		L DRIVE 41 0	Y
*	11	26060-10600	ASSY-LAMP,HEAD(L.H.)	1		R DRIVE 41 0	
	12	26060-10601	ASSY-LAMP,HEAD(L.H.)	1		R DRIVE 41 0	Y
	13	26060-10603	ASSY-LAMP,HEAD(L.H.)	1		R DRIVE 41 0	Y
*	14	26060-14000	ASSY-LAMP,HEAD(L.H.)(FROM SEPT.-64)	1		R DRIVE 41 0	N
	15	26060-14001	ASSY-LAMP,HEAD(L.H.)	1		R DRIVE 41 0	Y

S	KEY NO.	PART NO.	PART NAME	Q'TY	SALES UNIT	MODEL	ICA
*	16	26060-10800	ASSY-LAMP,HEAD(L.H.)	1		L DRIVE 410	
	17	26060-10801	ASSY-LAMP,HEAD(L.H.)	1		L DRIVE 410	Y
	18	26060-10803	ASSY-LAMP,HEAD(L.H.)	1		L DRIVE 410	Y
*	19	26060-13900	ASSY-LAMP,HEAD(L.H.)(FROM SEPT.-64)	1		L DRIVE 410	N
	20	26060-13901	ASSY-LAMP,HEAD(L.H.)	1		L DRIVE 410	Y
	21	26011-58001	UNIT-LAMP,HEAD	2		410	
	22	26012-58001	UNIT-LAMP,HEAD	2		410 R DRIVE	
	23	26012-58501	UNIT-LAMP,HEAD	2		410L DRIVE	
	24	26016-36700	BODY-SUB(NO.1)R.H.	1		410	
	25	26017-36700	BODY-SUB(NO.2)R.H.	1	1	410	
	26	26018-36700	BODY-SUB(NO.3)L.H.	1	1	410	
	27	26019-36700	BODY-SUB(NO.4)L.H.	1		410	
*	28	26023-32200	RING-RETAINING,LAMP UNIT	2		410	
	29	26023-14000	RING-RETAINING,LAMP UNIT	2		410	Y
*	30	26025-58000	RING-RETAINING.LAMP UNIT	2		410	
	31	26024-14000	RING-RETAINING,LAMP UNIT	2		410	Y
	32	26024-58000	SPRING-TENION	4		410	
	33	26031-10600	ASSY-CABLE,HEAD LAMP,WITH CONNECTOR	2		410	
	34	26022-58000	SCREW-ADJUSTING	8	10	410	
	35	00998-11110	SCREW	12		410	
	36	00999-90110	WASHER-LOCK	12		410	

Printed in Japan

REVISED: SEPTEMBER,1968

S	KEY NO.	PART NO.	PART NAME	Q'TY	SALES UNIT	MODEL	ICA
	37	26022-04100	SCREW TO FIX LAMP BODY	8		410	
	38	00915-11010	WASHER-LOCK TO FIX LAMP BODY	8	100	410	
	39	62410-10601	RIM-HEAD LAMP(R.H.)	1		410	
	40	62410-13200	RIM-HEAD LAMP(FROM 64-9)	2		410	N
	41	62411-10601	RIM-HEAD LAMP(L.H.)	1		410	
	42	62410-13200	RIM-HEAD LAMP(FROM 64-9)	2		410	N
	43	63831-10600	SCREW(TO FIX HEAD LAMP RIM)	6	50	410	
	44	26260-13200	ASSY-SOCKET,BULB(FROM 64-9)	9	10	410	

NOTE

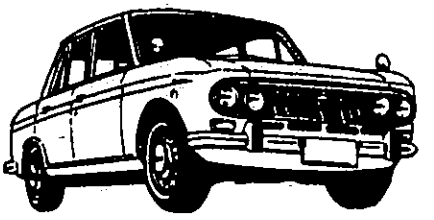

NOTE

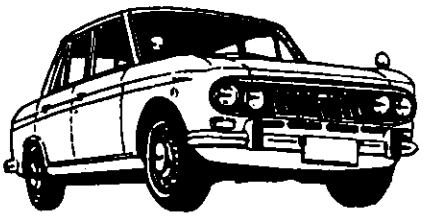

PARK & TURN SIGNAL LAMP

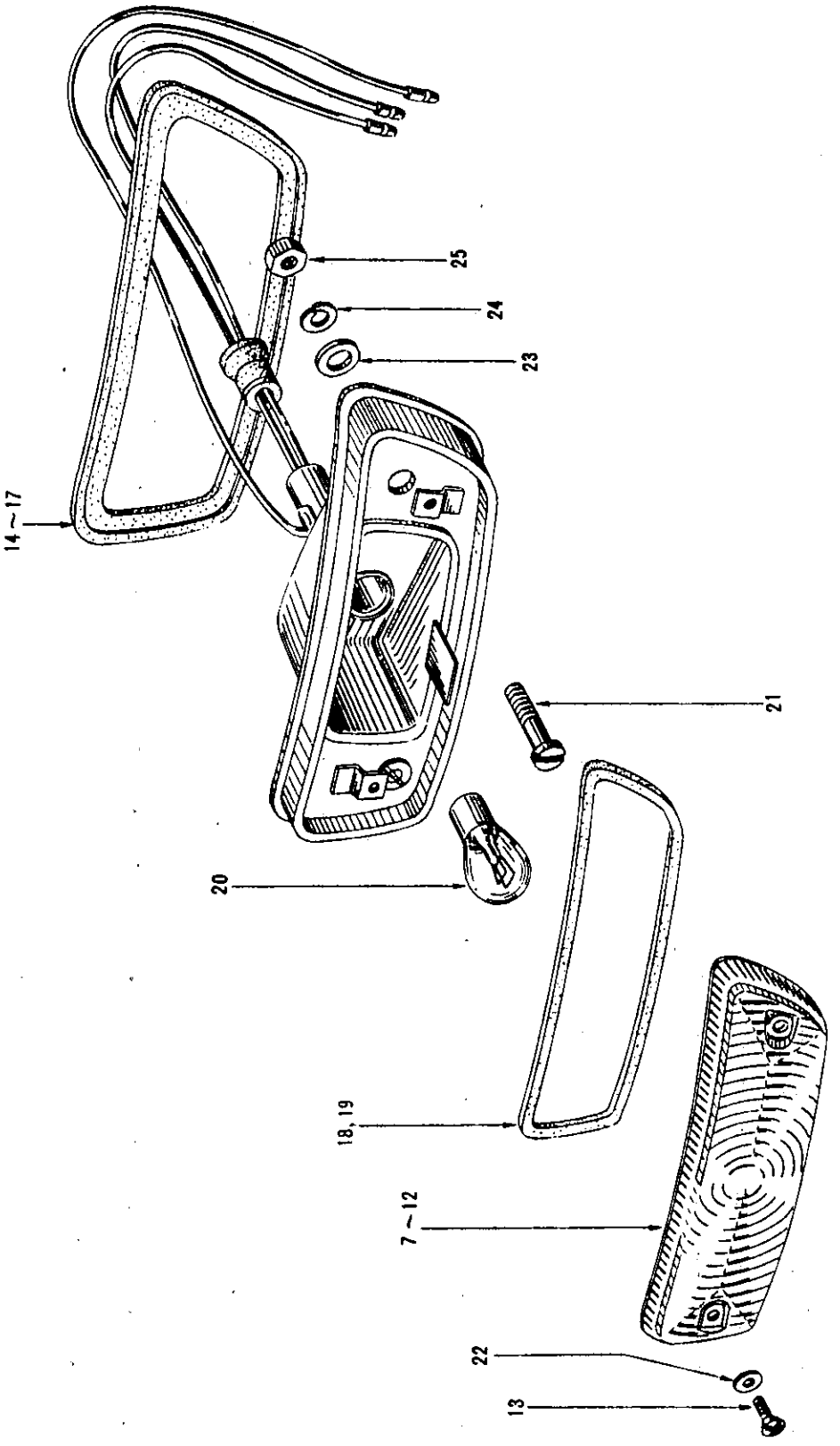

SEPTEMBER, 1968 Printed in Japan

PARK & TURN SIGNAL LAMP

S	KEY NO.	PART NO.	PART NAME	Q'TY	SALES UNIT	MODEL	ICA
	1	26120-10600	ASSY-LAMP,PARKING & TURN SIGNAL(R.H.)	1	5	R DRIVE 410	
	2	26120-10800	ASSY-LAMP,PARKING & TURN SIGNAL,AMBER(R.H.)	1		410 FOR U.S.A.	
	3	26120-10801	ASSY-LAMP,PARKING & TURN SIGNAL,WHITE(R.H.)	1		L DRIVE 410,EXCEPT U.S.A.	
	4	26125-10600	ASSY-LAMP,PARKING & TURN SIGNAL(L.H.)	1	5	R DRIVE 410	
	5	26125-10800	ASSY-LAMP,PARKING & TURN SIGNAL,AMBER(L.H.)	1		410 U.S.A.	
	6	26125-10801	ASSY-LAMP,PARKING & TURN SIGNAL,WHITE(L.H.)	1		L DRIVE 410,EXCEPT U.S.A.	
	7	26121-10600	LENS-PARKING & TURN SIGNAL LAMP(R.H.)	1		R DRIVE 410	
	8	26121-10800	LENS-PARKING & TURN SIGNAL LAMP,AMBER(R.H.)	1	1	410 FOR USA	
	9	26121-10801	LENS-PARKING & TURN SIGNAL LAMP,WHITE(R.H.)	1		L DRIVE 410 EXC USA	
	10	26126-10600	LENS-PARKING & TURN SIGNAL LAMP(L.H.)	1		R DRIVE 410	
	11	26126-10800	LENS-PARKING & TURN SIGNAL LAMP,AMBER(L.H.)	1	1	410 FOR USA	
	12	26126-10801	LENS-PARKING & TURN SIGNAL LAMP,WHITE(L.H.)	1		L DRIVE 410 EXC USA	
	13	00998-13910	SCREW	4		410	
	14	26123-10600	SEAT-PARKING & TURN SIGNAL LAMP(R.H.)	1		R DRIVE 410	
	15	26123-10800	SEAT-PARKING & TURN SIGNAL LAMP(R.H.)	1		L DRIVE 410	

Printed in Japan

REVISED: SEPTEMBER, 1963

S	KEY NO.	PART NO.	PART NAME	Q'TY	SALES UNIT	MODEL	ICA
	16	26128-10600	SEAT-PARKING & TURN SIGNAL LAMP(L.H.)	1		R DRIVE 410	
	17	26128-10800	SEAT-PARKING & TURN SIGNAL LAMP(L.H.)	1		L DRIVE 410	
	18	26143-10600	PACKING-LENS TO BODY	2	10	R DRIVE 410	
	19	26143-10800	PACKING-LENS TO BODY	2	2	L DRIVE 410	
*	20	26715-04200	BULB(12V-25/8W)	2		410	
	21	00998-81210	SCREW	4		410	
	22	26127-04100	PACKING-WASHER(4)LEATHER	4		410	
	23	00915-41410	WASHER-PLAIN	4		410	
	24	00999-90310	WASHER-LOCK	4	50	410	
*	25	00999-20300	NUT	4	100	410	
	26	26144-10800	COLLER-LAMP MOUNTING	4		L DRIVE 410	

Printed in Japan

REVISED: SEPTEMBER.1968

NOTE

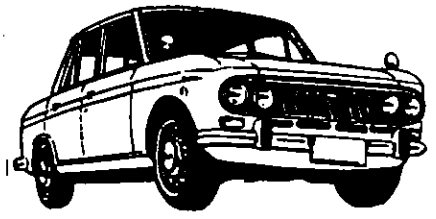

REAR COMBINATION LAMP

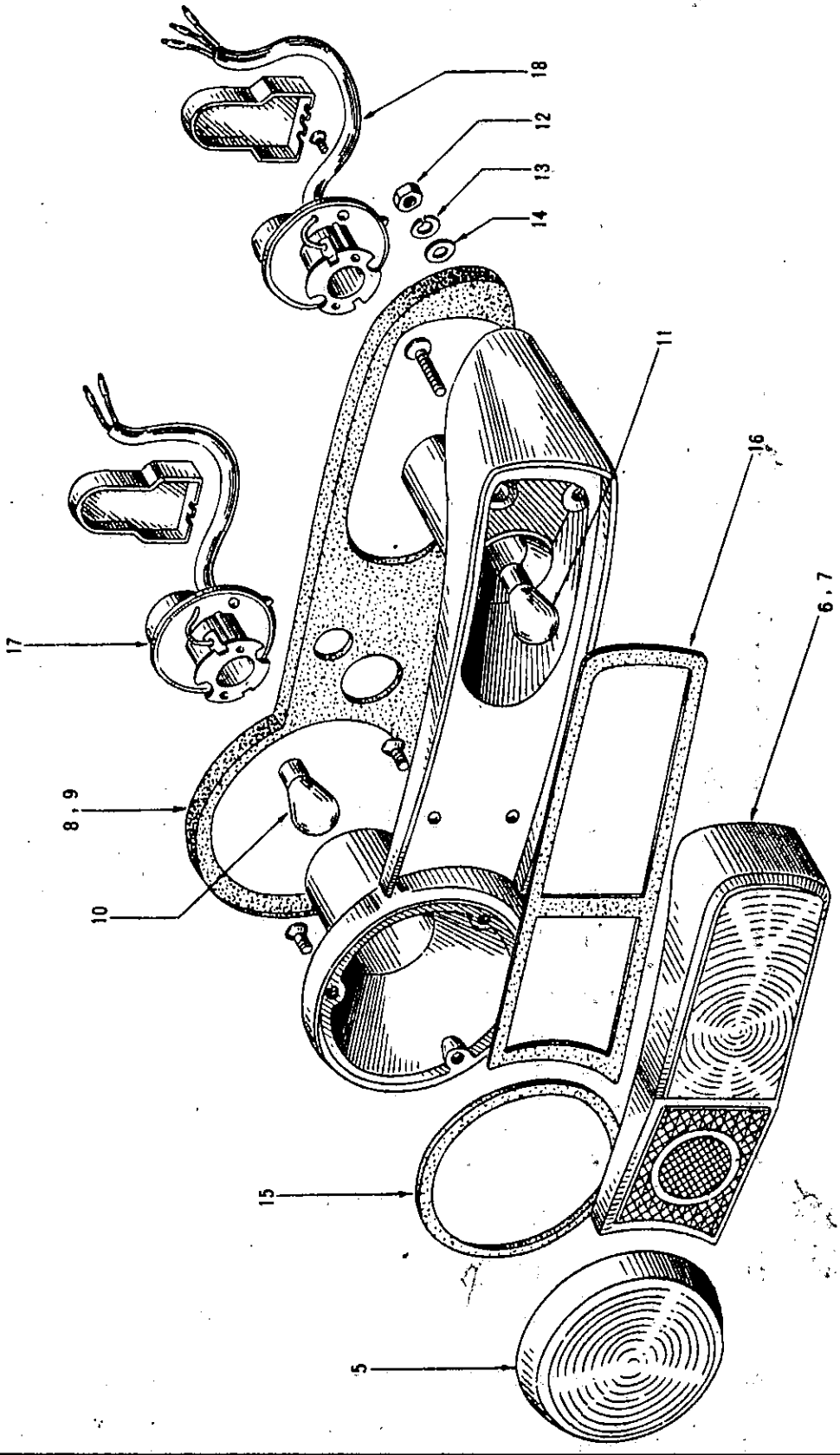

REAR COMBINATION LAMP

S	KEY NO.	PART NO.	PART NAME	Q'TY	SALES UNIT	MODEL	ICA
	1	26550-10600	ASSY-LAMP,COMBINATION(R.H.)	1		410(EXC.U. S.A.)	
	2	26550-10800	ASSY-LAMP,COMBINATION(R.H.)	1		410 U.S.A.	
	3	26555-10600	ASSY-LAMP,COMBINATION(L.H.)	1		410(EXC.U. S.A.)	
	4	26555-10800	ASSY-LAMP,COMBINATION(L.H.)	1		410 U.S.A.	
	5	26531-10600	LENS-TAIL & STOP LAMP	2		410	
	6	26521-10600	LENS-TURN SIGNAL LAMP	2	1	410(EXC.U. S.A.)	
	7	26521-10800	LENS-TURN SIGNAL LAMP(RED)	2		410 U.S.A.	
	8	26553-10600	SHEET-COMBINATION LAMP (R.H.)	1		410	
	9	26558-10600	SHEET-COMBINATION LAMP (L.H.)	1		410	
*	10	26715-04200	BULB(12V-25/8W)	2		410	
*	11	26716-07300	BULB(12V-25W)	2		410	
	12	00999-20310	NUT	6		410	
	13	00999-90310	WASHER-LOCK	6	50	410	
	14	00915-41410	WASHER-PLAIN	6		410	
	15	26523-10600	PACKING-LENS TO LAMP B ODY	2		410	
	16	26533-10600	PACKING-LENS TO LAMP B ODY	2		410	
	17	26524-10600	ASSY-HARNESS,WITH SOCK ET	2		410	

FIG. **40** NISSAN MOTOR CO., LTD.

S	KEY NO.	PART NO.	PART NAME	Q'TY	SALES UNIT	MODEL	ICA
	16	26534-10600	ASSY-HARNESS,WITH SOCKET	2		410	

Printed in Japan

REVISED: SEPTEMBER,1965

NOTE

FOG & INSPECTION LAMP

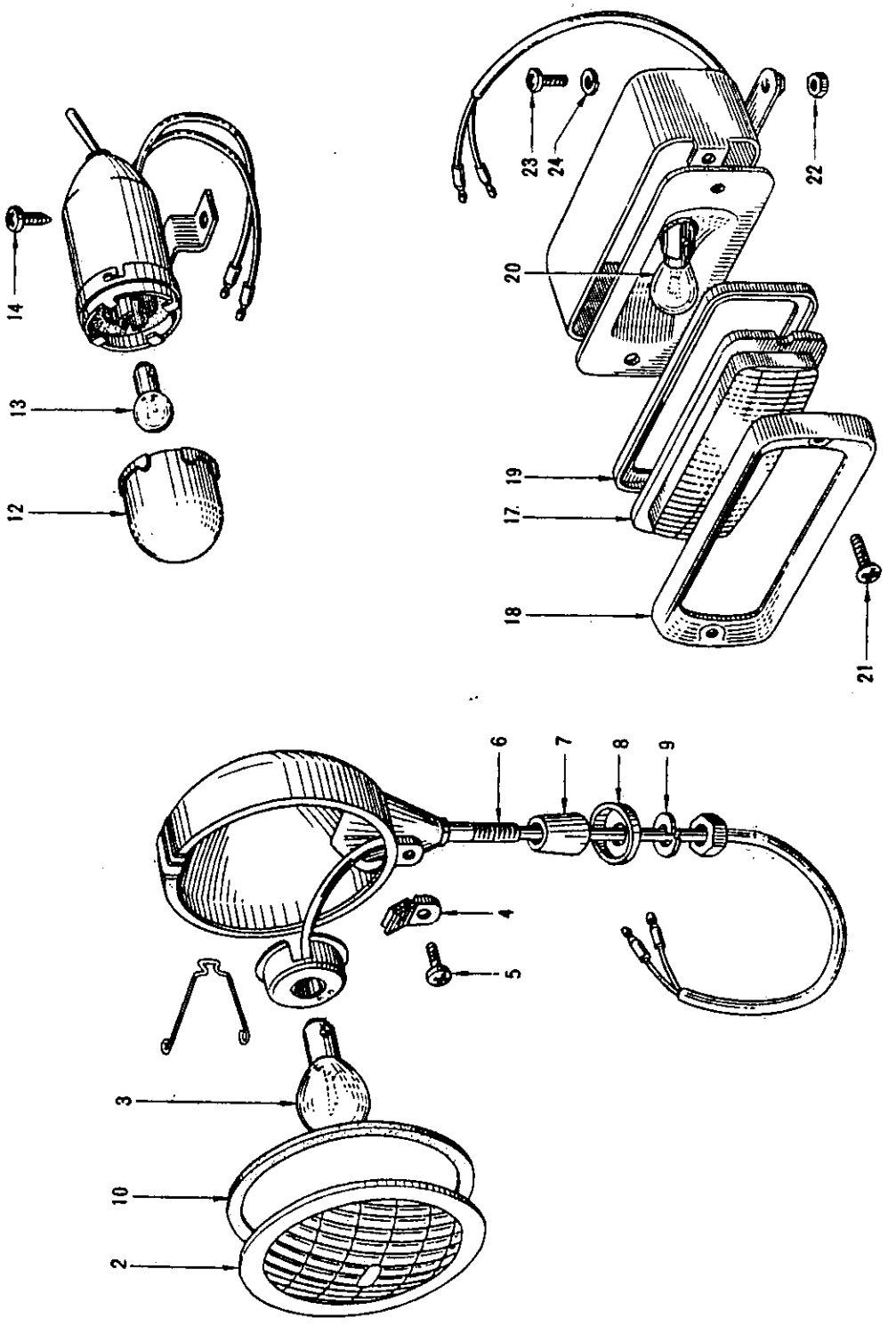

S	KEY NO.	PART NO.	PART NAME	Q'TY	SALES UNIT	MODEL	ICA
			FOG & INSPECTION LAMP				
	1	26150-11400	ASSY-LAMP, FOG	2		OP 410	
	2	25151-11400	ASSY-LENS, FOG LAMP	2		OP 410	
	3	26713-34200	BULB (12V-35W)	2		OP 410	
	4	26152-30800	ASSY-HOLDER, LENS	2		OP 410	
	5	00998-52820	SCREW	2		OP 410	
	6	26157-11400	BOLT	2		OP 410	
	7	26156-11400	COLLAR-FOG LAMP	2		OP 410	
	8	26158-11400	SPACER-FOG LAMP	2		OP 410	
	9	00997-90610	WASHER-LOCK	2		OP 410	
	10	26153-36700	PACKING-SEAL	2		OP 410	
	11	26230-30100	ASSY-LAMP, INSPECTION	1		OP 410	
	12	26231-01300	LENS-INSPECTION LAMP	1		OP 410	
	13	26232-30000	BULB (12V-8W)	1		OP 410	
	14	00511-41010	SCREW (TO FIX LAMP)	2		OP 410	
	15	26540-11400	ASSY-LAMP, REVERSE (UP TO C/# DP410-4-034525)	1		410	
	16	26540-11401	ASSY-LAMP, REVERSE (FROM C/# DP410-4-034526)	1		410	N
	17	26231-02700	LENS-REVERSE LAMP	1		410	
	18	26233-02700	RIM-REVERSE LAMP	1		410	
	19	26234-02700	PACKING-REAR LAMP	1		410	
	20	26716-07300	BULB (12V-25W)	1		410	
	21	00998-81120	SCREW	2		410	
	22	00999-20200	NUT	2		410	
	23	00998-52420	SCREW	2		410	
	24	00999-90210	WASHER-LOCK	2		410	

Printed in Japan

REVISED: SEPTEMBER, 1968

NOTE

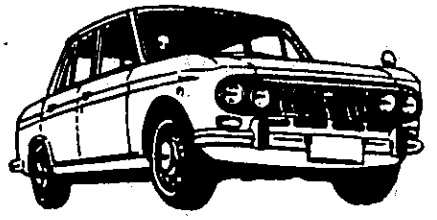

NOTE

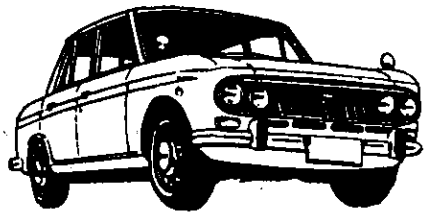

ROOM LAMP

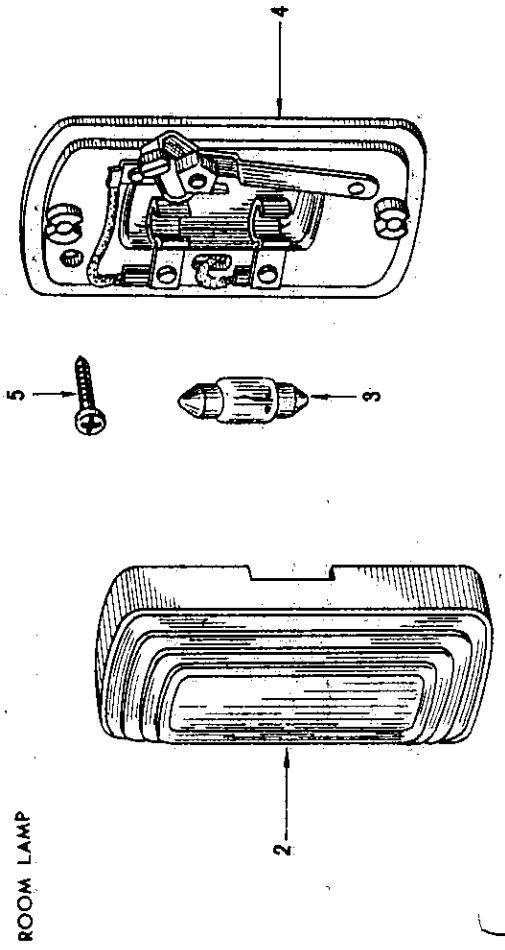

S	KEY NO.	PART NO.	PART NAME	Q'TY	SALES UNIT	MODEL	ICA
			ROOM LAMP				
*	1	26410-11401	ASSY-LAMP,ROOM	1		410	
	2	26411-10600	LENS-ROOM LAMP	1		410	
*	3	26718-10600	BULB(12V-5W)	1		410	
	4	26414-11401	BASE-ROOM LAMP	1		410	
	5	00510-61010	SCREW	2	50	410	

REVISED: SEPTEMBER,1968

Printed in Japan

NOTE

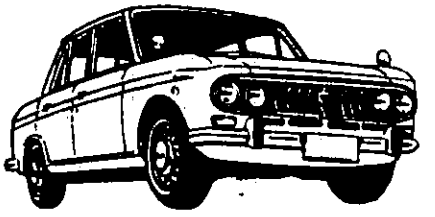

NOTE

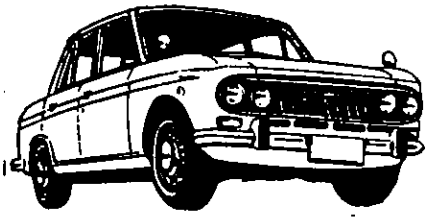

LICENCE LAMP

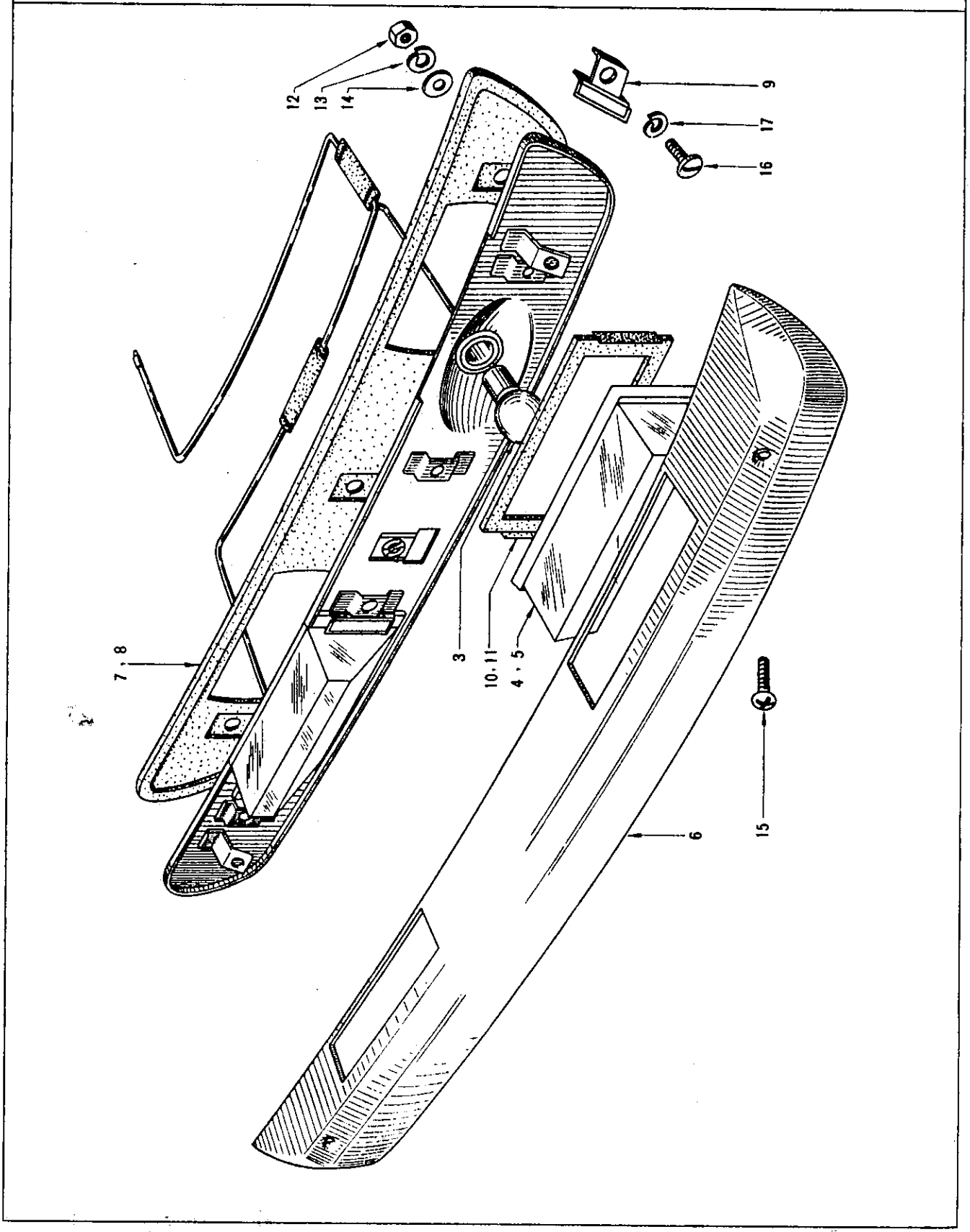

S	KEY NO.	PART NO.	PART NAME	Q'TY	SALES UNIT	MODEL	ICA
			LICENCE LAMP				
	1	26510-10600	ASSY-LAMP,LICENCE	1		410	
	2	26510-13200	ASSY-LAMP,LICENCE(FROM SEPT.-64)	1	2	410	Y
*	3	26717-04200	BULB(12V-8W)	2		410	
	4	26511-10600	LENS-LICENCE LAMP	2	1	410	
	5	26511-13200	LENS-LICENCE LAMP(FROM SEPT.-64)	2		410	N
	6	26512-10600	RIM-LICENCE LAMP	1	1	410	
	7	26513-10600	SHEET-LICENCE LAMP	1		410	
	8	26513-13200	SHEET-LICENCE LAMP(FROM SEPT.-64)	1		410	N
	9	26517-10600	CLAMP-LENS,LICENCE LAMP	4		410	
	10	26518-10600	PACKING-LENS TO LAMP BODY	2		410	
	11	26518-13200	PACKING-LENS TO LAMP BODY(FROM SEPT.-64)	2	10	410	N
	12	00999-20210	NUT	3		410	
	13	00999-90210	WASHER-LOCK	3	50	410	
	14	00915-41010	WASHER-PLAIN	3		410	
	15	00998-81120	SCREW	2	50	410	
	16	00998-51010	SCREW	4	50	410	
	17	00999-90110	WASHER-LOCK	4		410	

REVISED: SEPTEMBER,1968

Printed in Japan

NOTE

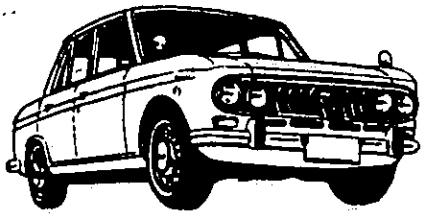

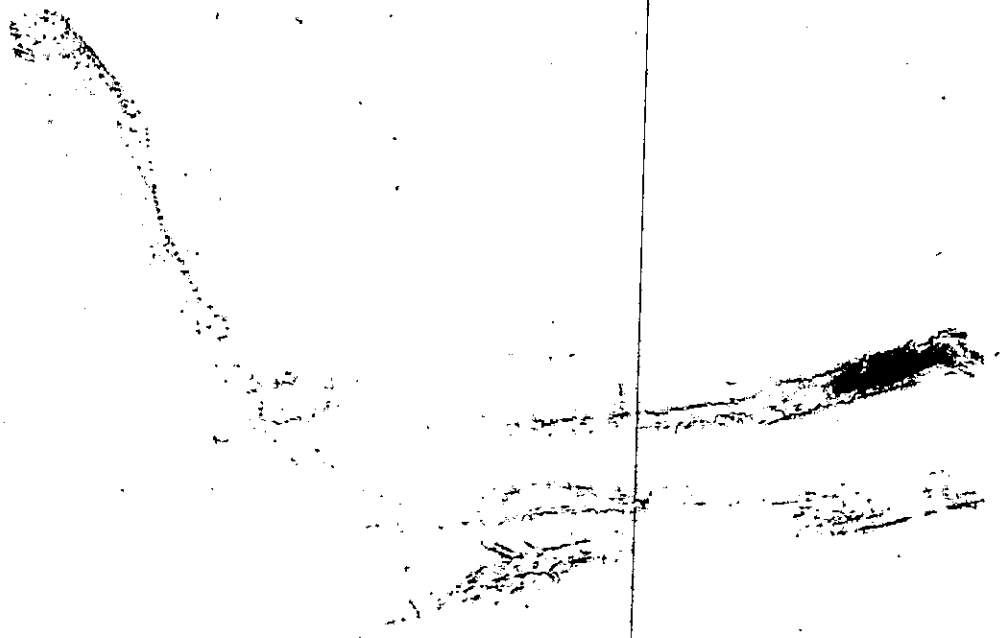

NOTE

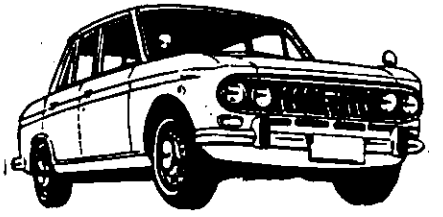

CLUTCH PEDAL & MASTER CYLINDER

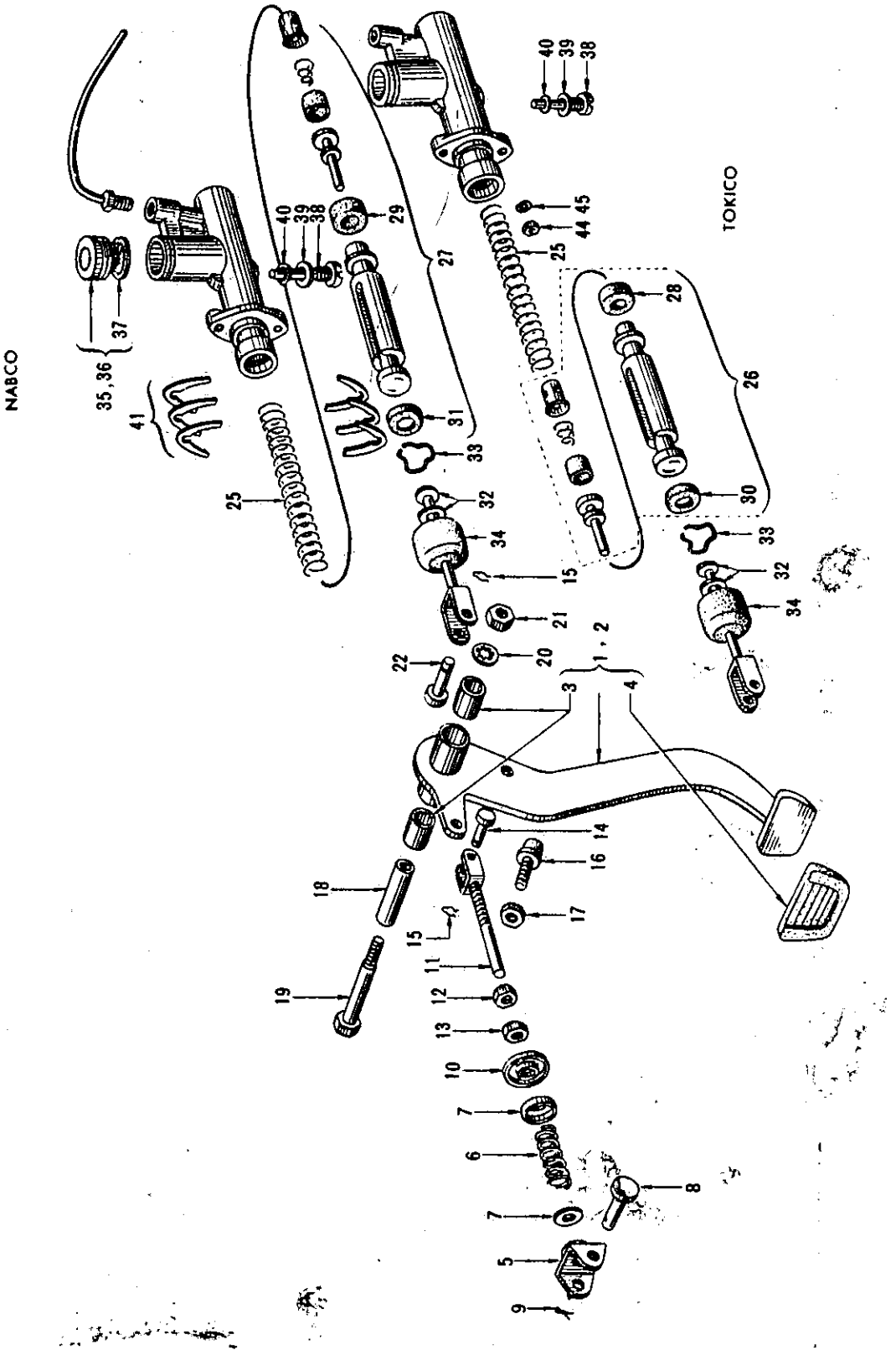

S	KEY NO.	PART NO.	PART NAME	Q'TY	SALES UNIT	MODEL	ICA
			CLUTCH PEDAL & MASTER CYLINDER				
*	1	46540-10601	ASSY-PEDAL,CLUTCH	1	1	P CLUTCH R DRIVE 410	
	2	46540-10800	ASSY-PEDAL,CLUTCH	1	1	P CLUTCH L DRIVE 410	
	3	46425-30000	BUSHING-PEDAL FULCRUM	2	10	P CLUTCH 4 10	
	4	46531-10601	COVER-PEDAL PAD	1	5	P CLUTCH 4 10	
*	5	46577-61000	ASSY-SEAT,SPRING,FULCRUM SIDE	1	5	P CLUTCH 4 10	
	6	46571-10600	SPRING-RETURN,CLUTCH PEDAL	1	5	P CLUTCH 4 10	
	7	46584-61000	SEAT-RUBBER,CLUTCH RETURN SPRING	2	5	P CLUTCH 4 10	
	8	46123-85460	PIN-CLEVIS	1	10	P CLUTCH 4 10	
	9	00921-22010	PIN-COTTER	1		P CLUTCH 4 10	
*	10	46574-61000	SEAT-SPRING,ROD SIDE	1	5	P CLUTCH 4 10	
	11	46583-10600	ASSY-ROD,PUSH,CLUTCH PEDAL RETURN	1		P CLUTCH 4 10	
	12	00911-14510	NUT	1		P CLUTCH 4 10	
	13	00911-34510	NUT	1	50	P CLUTCH 4 10	
*	14	46123-08700	PIN-CLEVIS	1	10	P CLUTCH 4 10	
	15	46124-35100	SPRING-RETAINING	2	10	P CLUTCH 4 10	

REVISED: SEPTEMBER,1968

Printed in Japan

S	KEY NO.	PART NO.	PART NAME	Q'TY	SALES UNIT	MODEL	ICA
	16	46510-08700	STOPPER-PEDAL,CLUTCH	2	5	P CLUTCH 4 10	
	17	00911-34510	NUT	2	50	P CLUTCH 4 10	
	18	46482-30000	SLEEVE-PEDAL SHAFT	1		P CLUTCH 4 10	
	19	46460-04100	PIN-FULCRUM	1	10	P CLUTCH 4 10	
*	20	00916-11800	WASHER	1	50	P CLUTCH 4 10	
	21	00911-34810	NUT	1		P CLUTCH 4 10	
*	22	46123-08700	PIN-CLEVIS	1	10	P CLUTCH 4 10	
	23	30610-10600	ASSY-CYLINDER,CLUTCH MASTER	1		P CLUTCH 4 10	
	24	30610-10601	ASSY-CYLINDER,CLUTCH MASTER(JUNE-64)	1	10	P CLUTCH 4 10	N
	25	46061-30000	SPRING-PISTON	1		P CLUTCH 4 10	
	26	46077-08710	ASSY-PISTON,CLUTCH MASTER(TOKICO)	1		P CLUTCH 4 10	
	27	46076-08700	ASSY-PISTON,CLUTCH MASTER(NABCO)	1		P CLUTCH 4 10	
*	28	46064-30000	CUP-PISTON,PRIMARY(TOKICO)	1	10	P CLUTCH 4 10	
	29	46064-30002	CUP-PISTON,PRIMARY(NABCO)	1	10	P CLUTCH 4 10	
*	30	46065-30000	CUP-PISTON,SECONDARY(TOKICO)	1	10	P CLUTCH 4 10	
*	31	46065-30001	CUP-PISTON,SECONDARY(NABCO)	1	10	P CLUTCH 4 10	
	32	46080-10600	ASSY-ROD,PUSH	1	1	P CLUTCH 4 10	

Printed in Japan

REVISED: SEPTEMBER,1968

S	KEY NO.	PART NO.	PART NAME	Q'TY	SALES UNIT	MODEL	ICA
	33	46070-27260	RING-SNAP	1	1	P CLUTCH 4 10	
	34	46100-27260	COVER-DUST	1		P CLUTCH 4 10	
	35	46020-10610	SET-CUP,FILLER(TOKICO)	1	5	P CLUTCH 4 10	
	36	46020-10600	SET-CUP,FILLER(NABCO)	1	5	P CLUTCH 4 10	
	37	46034-02700	GASKET-FILLER(NABCO)	1	10	P CLUTCH 4 10	
	38	46032-27260	SCREW-STOPPER	1		P CLUTCH 4 10	
	39	46043-27260	PACKING	1	10	P CLUTCH 4 10	
	40	46079-27260	RING- O	1	1	P CLUTCH 4 10	
	41	30611-27260	SHIM(1.6T) FOR CLUTCH PEDAL ADJUSTMENT	AR	50	P CLUTCH 4 10	
	42	30612-27260	SHIM(0.8T) FOR CLUTCH PEDAL ADJUSTMENT	AR	1	P CLUTCH 4 10	
	43	30613-27260	SHIM(0.5T) FOR CLUTCH PEDAL ADJUSTMENT	AR	10	P CLUTCH 4 10	
	44	00911-14510	NUT TO FIX MASTER CYLINDER	2		P CLUTCH 4 10	
	45	00915-21510	WASHER-LOCK TO FIX MASTER CYLINDER	2		P CLUTCH 4 10	

Printed in Japan

REVISED: SEPTEMBER,1968

NOTE

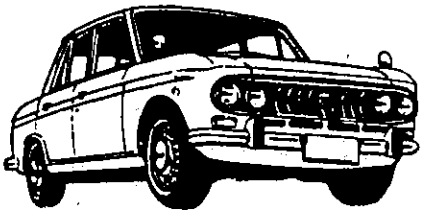

NOTE

AUTO-CLUTCH

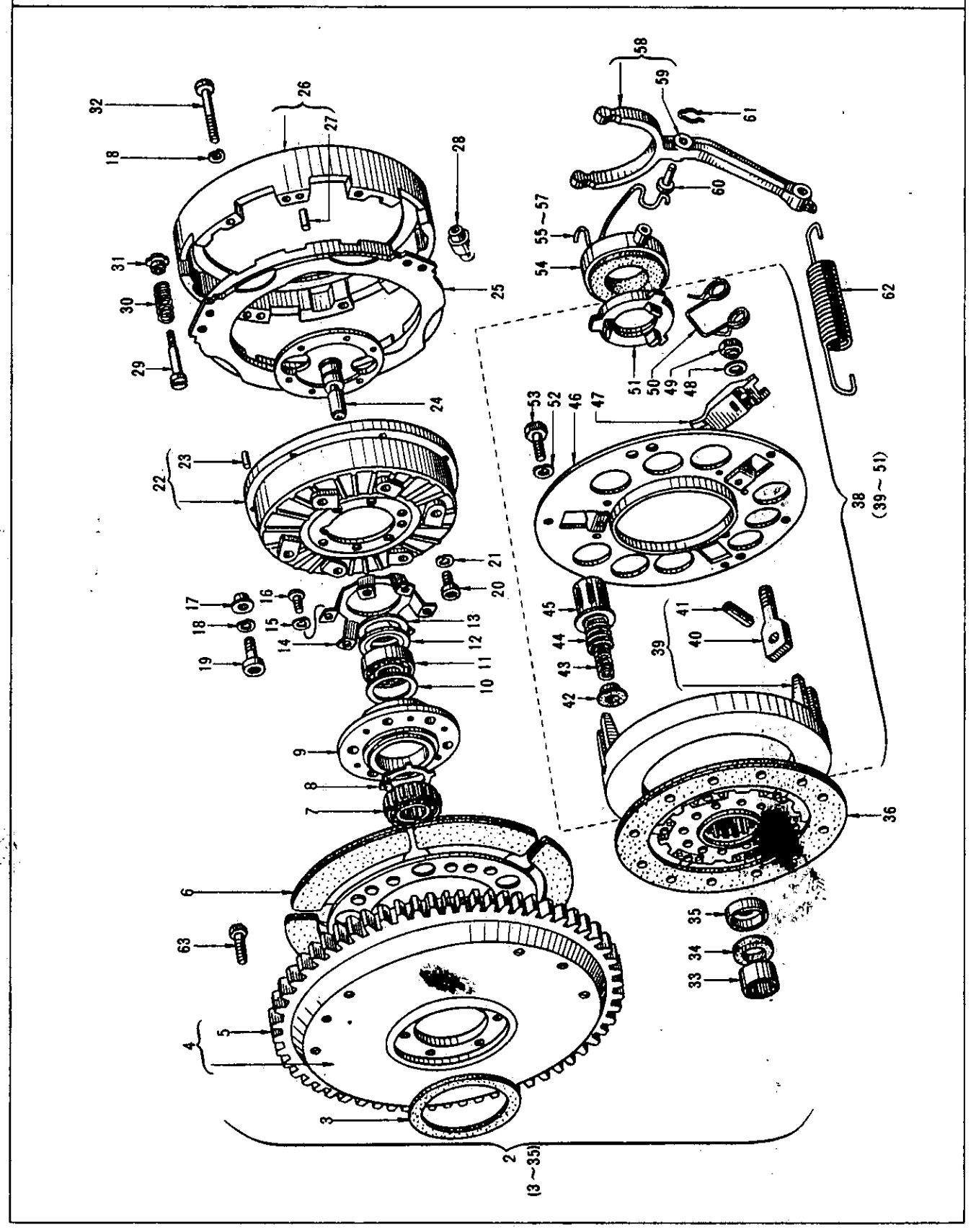

SEPTEMBER, 1968 Printed in Japan

S	KEY NO.	PART NO.	PART NAME	Q'TY	SALES UNIT	MODEL	ICA
			AUTO-CLUTCH				
	1	30000-09524	ASSY-UNIT,AUTO-CLUTCH, WITH FLYWHEEL	1		A CLUTCH 4 10	
	2	30010-09523	COMP.-CLUTCH,STARTING, WITH FLYWHEEL	1		A CLUTCH 4 10	
	3	30365-09520	SEAL-RING	1		A CLUTCH 4 10	
	4	12310-09521	ASSY-FLYWHEEL	1	1	A CLUTCH 4 10	
	5	12312-09600	RING GEAR-FLYWHEEL	1		A CLUTCH 4 10	
	6	30310-09522	ASSY-DISC,STARTING CLUTCH	1		A CLUTCH 4 10	
	7	30362-09520	ASSY-CLUTCH,ONE WAY	1		A CLUTCH 4 10	
	8	30366-09520	RING-SNAP,ONE WAY CLUTCH	1		A CLUTCH 4 10	
	9	30351-09520	FLANGE-BEARING	1		A CLUTCH 4 10	
	10	30354-09520	SPACER-BEARING,FRONT	1		A CLUTCH 4 10	
	11	30361-09520	ASSY-BEARING,BALL	1		A CLUTCH 4 10	
	12	30352-09520	SEAL-THRUST BEARING	1		A CLUTCH 4 10	
	13	30353-09520	SPACER-BEARING,REAR	1		A CLUTCH 4 10	
	14	30355-09520	COVER-BEARING	1		A CLUTCH 4 10	
	15	30357-09520	WASHER-LOCK	6		A CLUTCH 4 10	

REVISED: SEPTEMBER,1968

Printed in Japan

S	KEY NO.	PART NO.	PART NAME	QTY	SALES UNIT	MODEL	ICA
	16	30356-09520	BOLT	6		A CLUTCH 4 10	
	17	30371-09520	SEAT-STRAP	6		A CLUTCH 4 10	
	18	30218-09520	WASHER-LOCK	15		A CLUTCH 4 10	
	19	30375-09520	BOLT	6		A CLUTCH 4 10	
	20	30382-09520	BOLT	6		A CLUTCH 4 10	
	21	30218-35720	WASHER-LOCK	6		A CLUTCH 4 10	
	22	30391-09520	HOUSING-DRIVE,WITH PIN	1		A CLUTCH 4 10	
	23	30392-09520	PIN-KNOCK	2		A CLUTCH 4 10	
	24	30381-09520	HUB-DRIVE HOUSING	1		A CLUTCH 4 10	
	25	30333-09520	PLATE-THRUST	1		A CLUTCH 4 10	
	26	30331-09520	RING-OUTER	1		A CLUTCH 4 10	
	27	30332-09520	PIN-KNOCK	3		A CLUTCH 4 10	
	28	30340-09520	ASSY-ROLLER,CENTRIFUGAL	12		A CLUTCH 4 10	
	29	30335-09520	BOLT-SPRING	6		A CLUTCH 4 10	
	30	30334-09520	SPRING-ADJUST	6		A CLUTCH 4 10	
	31	30336-09520	NUT-ADJUST	6		A CLUTCH 4 10	
	32	30011-09520	BOLT	9		A CLUTCH 4 10	

Printed in Japan

REVISED: SEPTEMBER,1968

S	KEY NO.	PART NO.	PART NAME	QTY	SALES UNIT	MODEL	ICA
	33	30363-09520	ASSY-ROLLER,NEEDLE PILOT	1		A CLUTCH 4 10	
	34	30364-09520	FELT-OIL SEAL,PILOT	1		A CLUTCH 4 10	
	35	30372-09520	RETAINER-SEAL	1		A CLUTCH 4 10	
	36	30100-09522	ASSY-DISC,CLUTCH,GEAR SHIFT	1		A CLUTCH 4 10	
	37	30100-09523	ASSY-DISC,CLUTCH,GEAR SHIFT	1		A CLUTCH 4 10	Y
	38	30210-09520	ASSY-COVER,CLUTCH,GEAR SHIFT	1		A CLUTCH 4 10	
	39	30213-09520	PLATE-PRESSURE	1		A CLUTCH 4 10	
	40	30224-09520	BOLT-EYE	3	10	A CLUTCH 4 10	
	41	30225-09520	PIN-EYE BOLT	3	50	A CLUTCH 4 10	
	42	30247-09520	SEAT-SPRING	9		A CLUTCH 4 10	
	43	30219-09520	SPRING-PRESSURE,INNER	6		A CLUTCH 4 10	
	44	30214-09520	SPRING-PRESSURE,OUTER	9	30	A CLUTCH 4 10	
	45	30215-09520	RETAINER-PRESSURE SPRING	9	10	A CLUTCH 4 10	
	46	30209-09520	ASSY-COVER,WITH FULCRUM PLATE	1		A CLUTCH 4 10	
	47	30221-09520	LEVER-RELEASE	3	10	A CLUTCH 4 10	
	48	30239-09520	WASHER	3		A CLUTCH 4 10	
	49	30229-09520	NUT-EYE BOLT	3		A CLUTCH 4 10	

Printed in Japan

REVISED: SEPTEMBER,1968

S	KEY NO.	PART NO.	PART NAME	Q'TY	SALES UNIT	MODEL	ICA
	50	30231-09520	SPRING-RELEASE LEVER	3		A CLUTCH 4 10	
	51	30222-09520	PLATE-RELEASE	1	10	A CLUTCH 4 10	
	52	30218-09520	WASHER-LOCK	6		A CLUTCH 4 10	
	53	30217-09520	BOLT	6		A CLUTCH 4 10	
	54	30510-09521	ASSY-BEARING,CLUTCH RE LEASE	1	1	A CLUTCH 4 10	
	55	30514-09530	SPRING-HOLDER	1	10	A CLUTCH 4 10	
	56	30514-09521	SPRING-HOLDER	2		A CLUTCH 4 10	Y
	57	30514-11700	SPRING-HOLDER	3	10	A CLUTCH 4 10	Y
	58	30530-11700	ASSY-LEVER,WITHDROWAL	1		A CLUTCH 4 10	
	59	30532-04100	BUSHING-WITHDRAWAL LEV ER	1	10	A CLUTCH 4 10	
	60	30537-04100	PIN-WITHDRAWAL LEVER	1	5	A CLUTCH 4 10	
	61	30541-04100	RETAINER-SPRING	1		A CLUTCH 4 10	
	62	30533-10600	SPRING-RETURN	1	10	A CLUTCH 4 10	
	63	12315-09521	BOLT-FLYWHEEL	6	10	A CLUTCH 4 10	
	64	30547-32201	TRUNNION-WITHDRAWAL LE VER	1	50	410	
	65	30548-32201	NUT-LOCK,PUSH ROD	1	1	410	
	66	30542-10600	COVER-DUST,WITHDRAWAL LEVER	1	10	410	

Printed in Japan

REVISED: SEPTEMBER,1968

NOTE

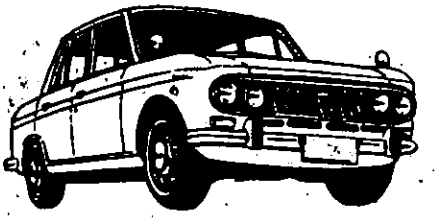

AUTO-CLUTCH RELEASE MECHANISM

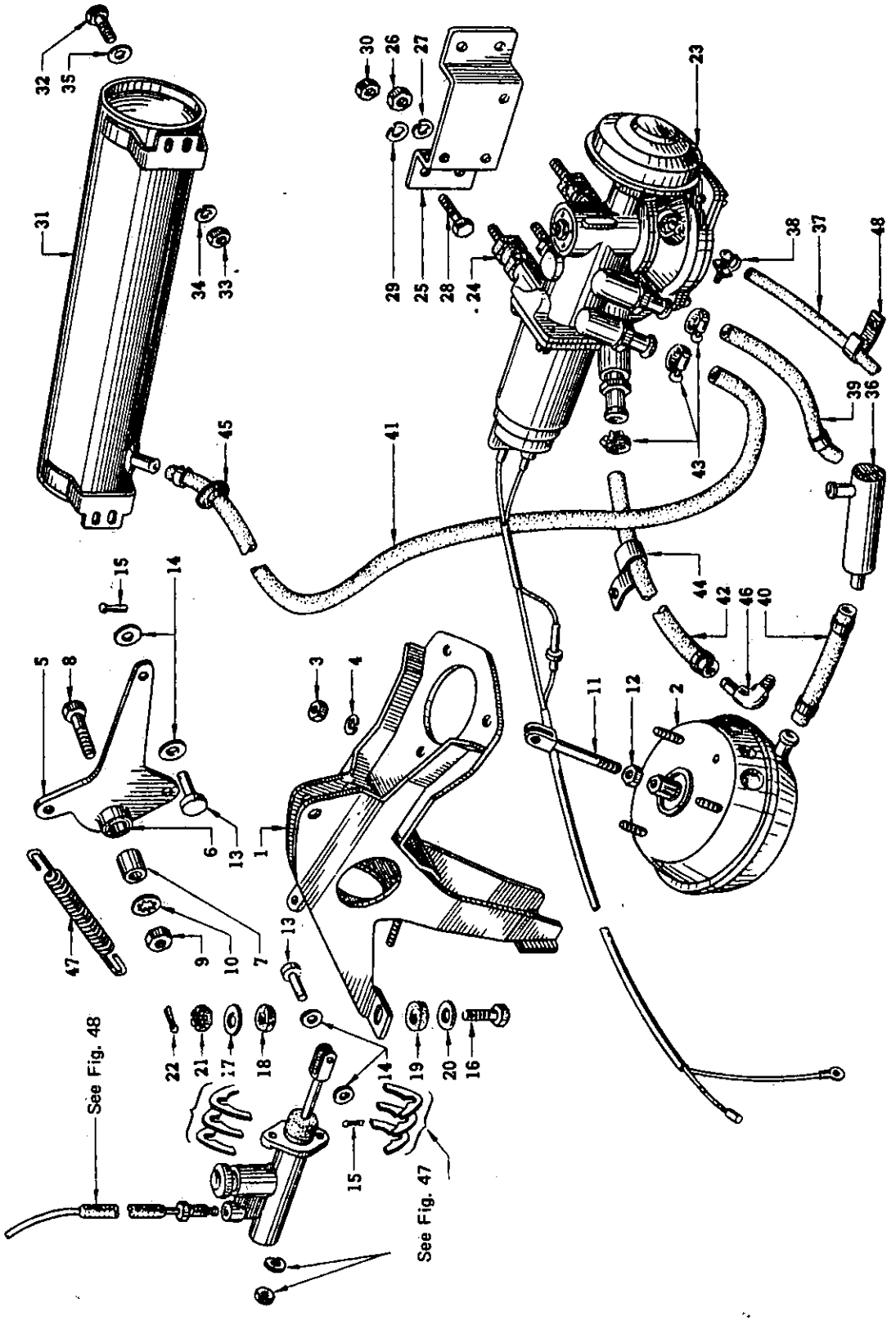

S	KEY NO.	PART NO.	PART NAME	Q'TY	SALES UNIT	MODEL	ICA
			AUTO-CLUTCH RELEASE MECHANISM				
	1	30711-11700	BRACKET-SURVO MOTOR & MASTER CYLINDER	1	1	A CLUTCH 4 10	
	2	30710-09520	ASSY-SERVO MOTOR	1		A CLUTCH 4 10	
	3	00911-14510	NUT TO FIX SERVO MOTOR	3		A CLUTCH 4 10	
	4	00915-11510	WASHER-LOCK TO FIX SERVO MOTOR	3		A CLUTCH 4 10	
	5	30720-11700	ASSY-LEVER,CLUTCH OPERATING	1	1	A CLUTCH 4 10	
	6	30532-30100	BUSHING-CLUTCH OPERATING	1	5	A CLUTCH 4 10	
	7	30729-09520	COLLAR-PIVOT BOLT	1		A CLUTCH 4 10	
	8	30727-09520	BOLT-PIVOT	1	2	A CLUTCH 4 10	
	9	00911-14510	NUT	1		A CLUTCH 4 10	
	10	00916-21510	WASHER-LOCK	1	50	A CLUTCH 4 10	
	11	30715-09521	ASSY-ROD,SERVO MOTOR	1		A CLUTCH 4 10	
	12	00911-34510	NUT	1	50	A CLUTCH 4 10	
*	13	46123-08700	PIN-CLEVIS,MASTER CYLINDER ROD	2	10	A CLUTCH 4 10	
	14	00915-41510	WASHER-PLAIN	4		A CLUTCH 4 10	
	15	46124-35100	CLIP-CLEVIS PIN	2	10	A CLUTCH 4 10	

Printed in Japan

REVISED: SEPTEMBER,1968

S	KEY NO.	PART NO.	PART NAME	Q'TY	SALES UNIT	MODEL	ICA
	16	00114-53010	BOLT	3	50	A CLUTCH 4 10	
	17	00915-41510	WASHER-PLAIN	3		A CLUTCH 4 10	
	18	30712-11700	WASHER-RUBBER(UPPER)	3	50	A CLUTCH 4 10	
	19	30713-11700	WASHER-RUBBER(LOWER)	3	1	A CLUTCH 4 10	
	20	00915-51510	WASHER-PLAIN	3	50	A CLUTCH 4 10	
	21	00911-94510	NUT	3	50	A CLUTCH 4 10	
	22	00921-11810	PIN-COTTER	3	50	A CLUTCH 4 10	
	23	30730-09520	COMP.-VALVE,CONTROL	1		A CLUTCH 4 10	
	24	30738-09520	INSULATOR-NOISE	3		A CLUTCH 4 10	
	25	30731-11700	BRACKET-CONTROL VALVE	1		A CLUTCH 4 10	
	26	00911-14410	NUT TO FIX CONTROL VALVE	3		A CLUTCH 4 10	
	27	00915-11410	WASHER-LOCK TO FIX CONTROL VALVE	3		A CLUTCH 4 10	
	28	00114-51610	BOLT	4		A CLUTCH 4 10	
	29	00915-11510	WASHER-LOCK	4		A CLUTCH 4 10	
	30	00911-14510	NUT-PLAIN	4		A CLUTCH 4 10	
	31	30740-11700	ASSY-TANK,RESERVOIR	1		A CLUTCH 4 10	
	32	00114-51610	BOLT	4		A CLUTCH 4 10	

Printed in Japan

REVISED: SEPTEMBER,1968

S	KEY NO.	PART NO.	PART NAME	Q'TY	SALES UNIT	MODEL	ICA
	33	00911-14510	NUT	4		A CLUTCH 4 10	
	34	00915-11510	WASHER-LOCK	4		A CLUTCH 4 10	
	35	00915-41510	WASHER-PLAIN	4		A CLUTCH 4 10	
	36	30743-09520	CHAMBER-SURGE	1	1	A CLUTCH 4 10	
	37	30732-11700	HOSE(CONTROL VALVE TO CARBURETOR)	1		A CLUTCH 4 10	
	38	30737-09521	CLAMP-HOSE	2		A CLUTCH 4 10	
*	39	30745-09520	HOSE(SERGE CHAMBER TO CONTROL VALVE)	1	2	A CLUTCH 4 10	
	40	30745-11700	HOSE(SERGE CHAMBER TO SERVO MOTOR)	1	10	A CLUTCH 4 10	
	41	30734-11700	HOSE(CONTROL VALVE TO RESERVOIR TANK)	1		A CLUTCH 4 10	
	42	30735-09520	HOSE(CONTROL VALVE TO MANIFOLD)	1	10	A CLUTCH 4 10	
	43	30739-09521	CLAMP-HOSE(20)	8		A CLUTCH 4 10	
	44	30754-11700	CLAMP-VACCUM HOSE	1		A CLUTCH 4 10	
	45	24041-30100	GROMMET-RUBBER	1		A CLUTCH 4 10	
	46	30755-09520	ASSY-ELBOW,VACUUM HOSE	1	1	A CLUTCH 4 10	
	47	30726-09520	SPRING-RETURN,CLUTCH OPERATING LEVER	1	10	A CLUTCH 4 10	
	48	30758-11700	CLAMP-VACUUM BASE	1	10	A CLUTCH 4 10	

Printed in Japan

REVISED: SEPTEMBER,1968

NOTE

NOTE

AUTO-CLUTCH MASTER CYLINDER

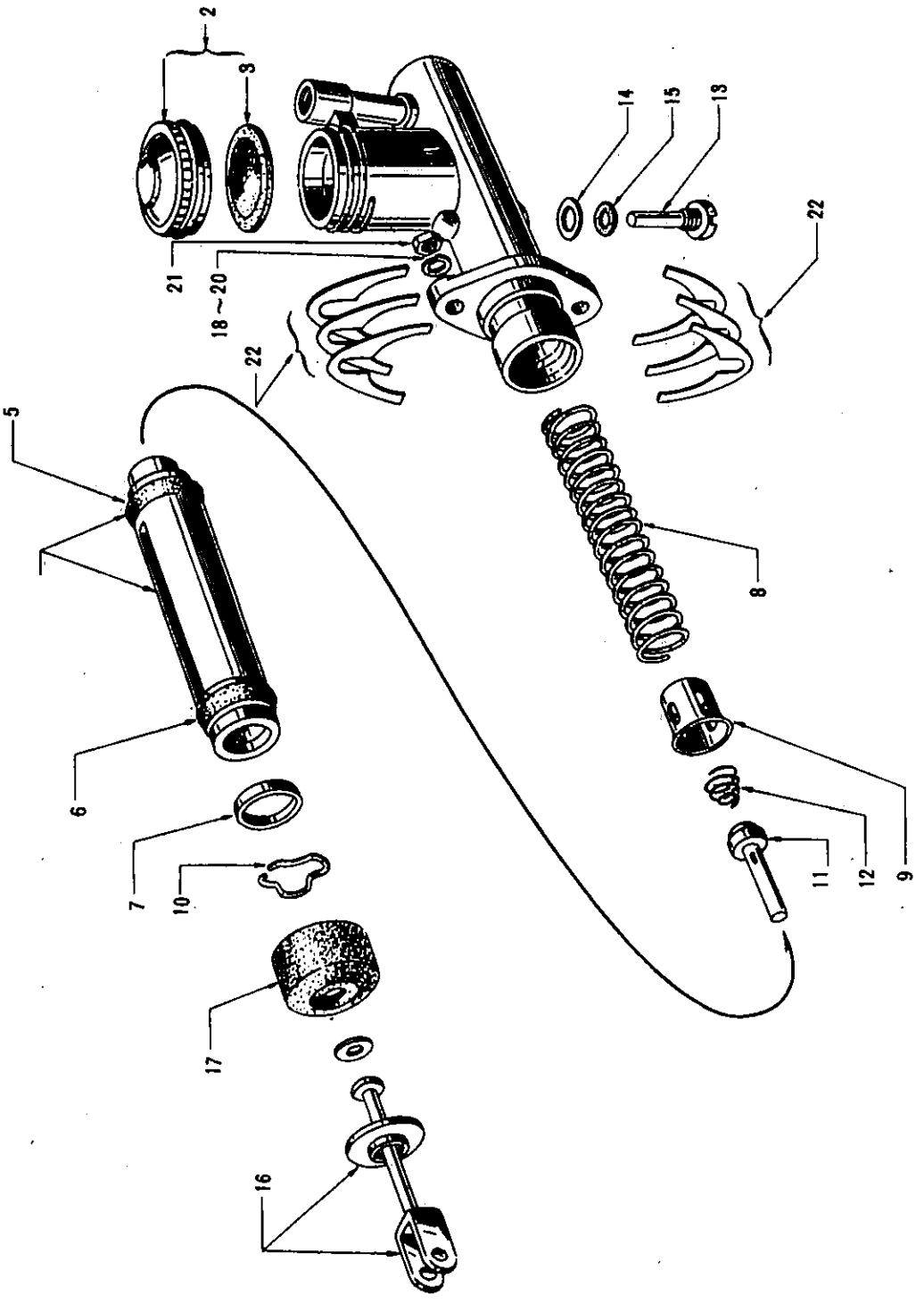

S	KEY NO.	PART NO.	PART NAME	Q'TY	SALES UNIT	MODEL	ICA
			AUTO-CLUTCH MASTER CYLINDER				
	1	30610-30500	ASSY-CYLINDER,CLUTCH MASTER	1	1	A CLUTCH 4 10	
*	2	46035-01300	ASSY-CAP,FILLER,OIL TANK	1	10	A CLUTCH 4 10	
*	3	46034-01300	GASKET-FILLER CAP	1	10	A CLUTCH 4 10	
*	4	46077-30800	PISTON-MASTER CYLINDER ,CLUTCH	1	10	A CLUTCH 4 10	
*	5	46064-30000	CUP-PISTON,RIMARY,MASTER CYLINDER	1	10	A CLUTCH 4 10	
*	6	46065-30000	CUP-PISTON,SECONDARY,MASTER CYLINDER	1	10	A CLUTCH 4 10	
	7	46069-30000	RING-SECONDARY CUP	1	10	A CLUTCH 4 10	
	8	46075-27260	SPRING-RETURN,PISTON	1	5	A CLUTCH 4 10	
	9	46076-30800	SEAT-RETURN SPRING,PISTON	1		A CLUTCH 4 10	
	10	46070-27260	CLIP-CIR	1	1	A CLUTCH 4 10	
	11	46073-30800	ASSY-VALVE,INLET	1	10	A CLUTCH 4 10	
	12	46056-27260	SPRING-INLET VALVE	1	5	A CLUTCH 4 10	
	13	46032-27260	PIN-RELEASE,INLET VALVE	1		A CLUTCH 4 10	
	14	46043-27260	GASKET-RELEASE PIN,VALVE SEAT	1	10	A CLUTCH 4 10	
	15	46079-27260	O RING	1	1	A CLUTCH 4 10	

Printed in Japan

REVISED: SEPTEMBER,1968

S	KEY NO.	PART NO.	PART NAME	Q'TY	SALES UNIT	MODEL	ICA
	16	46080-30500	ASSY-ROD,PUSH,MASTER CYLINDER	1	5	A CLUTCH 4 10	
	17	46100-27260	BOOT-RUBBER,MASTER CYLINDER	1	-	A CLUTCH 4 10	
	18	30611-27260	SHIM-MASTER CYLINDER(1.6 T)	2	50	A CLUTCH 4 10	
	19	30612-27260	SHIM-MASTER CYLINDER(0.8 T)	2	1	A CLUTCH 4 10	
	20	30613-27260	SHIM-MASTER CYLINDER(0.5 T)	2	10	A CLUTCH 4 10	
	21	00911-14510	NUT	2		A CLUTCH 4 10	
	22	00915-11510	WASHER-LOCK	2		A CLUTCH 4 10	

Printed in Japan

REVISED: SEPTEMBER,1968

NOTE

CLUTCH OPERATING CYLINDER

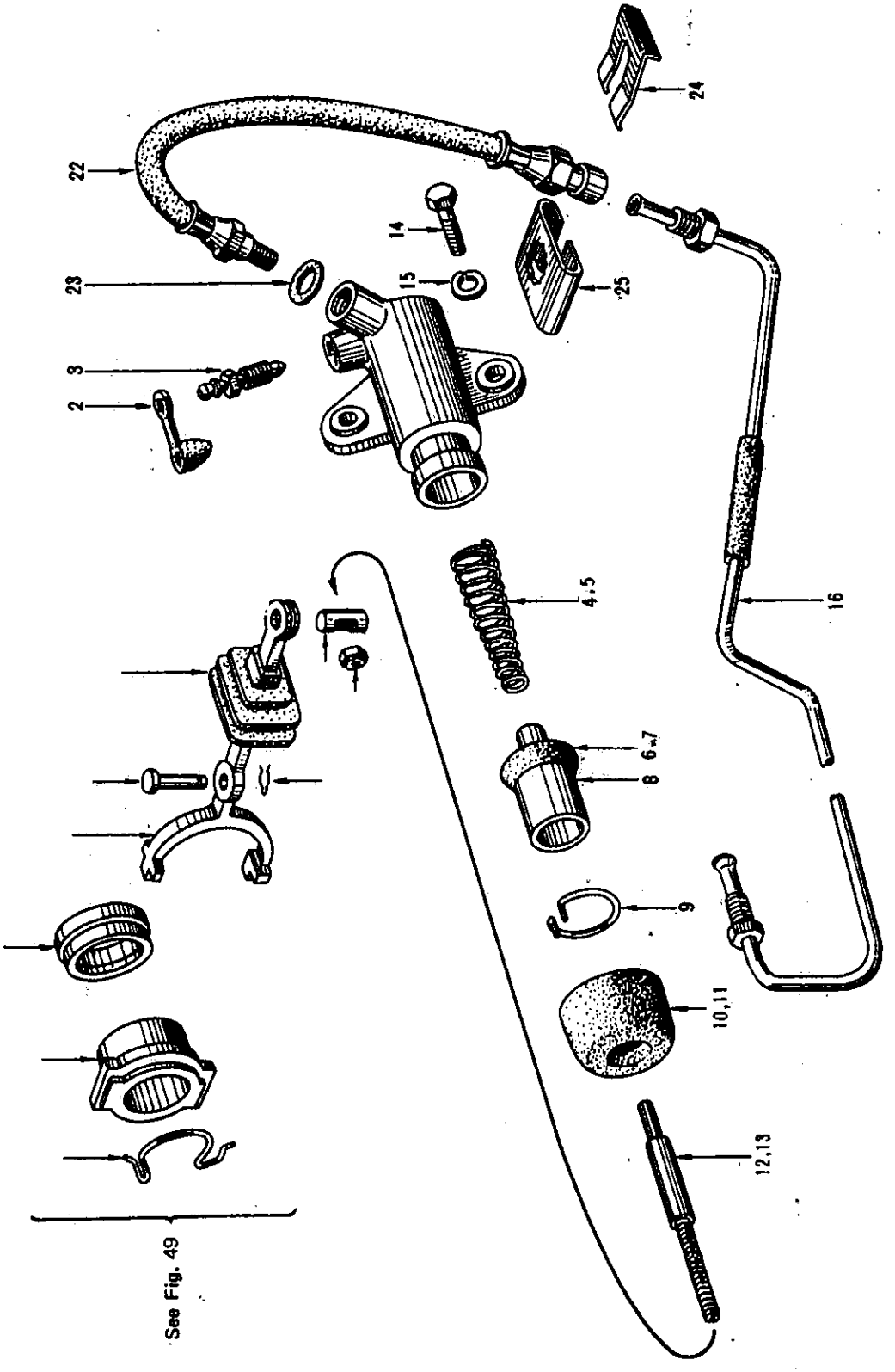

S	KEY NO.	PART NO.	PART NAME	Q'TY	SALES UNIT	MODEL	ICA
			CLUTCH OPERATING CYLINDER				
	1	30620-10600	ASSY-CYLINDER, CLUTCH OPERATING	1		410	
	2	41129-30001	CAP-BLEEDER	1		410	
	3	41128-30001	SCREW-BLEEDER	1		410	
	4	30622-30001	SPRING-PISTON (TOKICO)	1		410	
	5	30622-36900	SPRING-PISTON (NABCO)	1		410	
	6	30624-30001	CUP-PISTON (TOKICO)	1		410	
	7	30624-30002	CUP-PISTON (NABCO)	1		410	
	8	30625-27260	PISTON-CLUTCH OPERATING	1		410	
	9	30626-30001	RING-SNAP	1		410	
	10	30627-10610	COVER-DUST (TOKICO)	1		410	
	11	30627-32200	COVER-DUST (NABCO)	1		410	
	12	30628-10610	ROD-PUSH (TOKICO)	1		410	
	13	30628-10600	ROD-PUSH (NABCO)	1		410	
	14	00124-63010	BOLT	2		410	
	15	00915-21610	WASHER-LOCK	2		410	
	16	46410-10600	ASSY-TUBE, CLUTCH	1		P CLUTCH, R DRIVE 410	
	17	46410-10601	ASSY-TUBE, CLUTCH	1		P CLUTCH, R DRIVE 410	
	18	46410-10800	ASSY-TUBE, CLUTCH	1		P CLUTCH, L DRIVE 410	
	19	46410-10801	ASSY-TUBE, CLUTCH	1		P CLUTCH, L DRIVE 410	
	20	46410-11700	ASSY-TUBE, CLUTCH	1		A CLUTCH 410	

S	KEY NO.	PART NO.	PART NAME	Q'TY	SALES UNIT	MODEL	ICA
	21	46410-11702	ASSY-TUBE, CLUTCH	1		A CLUTCH 410	
	22	46212-10600	ASSY-HOSE, CLUTCH (=250 m/m)	1		410	
	23	46237-30000	GASKET (CLUTCH HOSE TO OPERATING CYLINDER)	1		410	
	24	46206-61000	SPRING-LOCK, BRAKE HOSE	1		410	
	25	46205-61000	PLATE-LOCK, BRAKE HOSE	1		410	

Printed in Japan

REVISED: SEPTEMBER, 1968

NOTE

CLUTCH

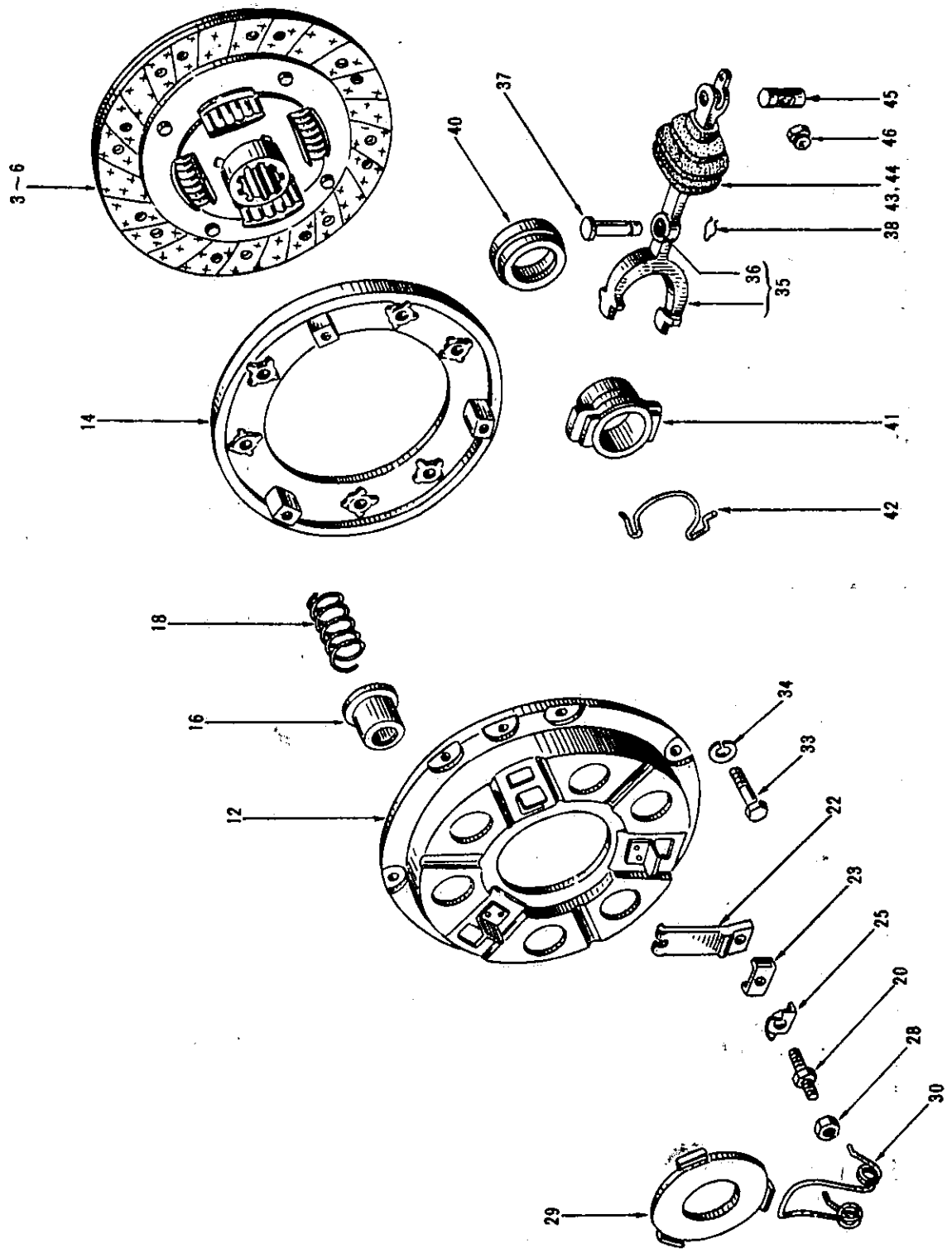
3~6
14
18
16
12
29
30
28
20
25
23
22
33
34
40
37
41
42
36
35
38
43,44
46
45

CLUTCH

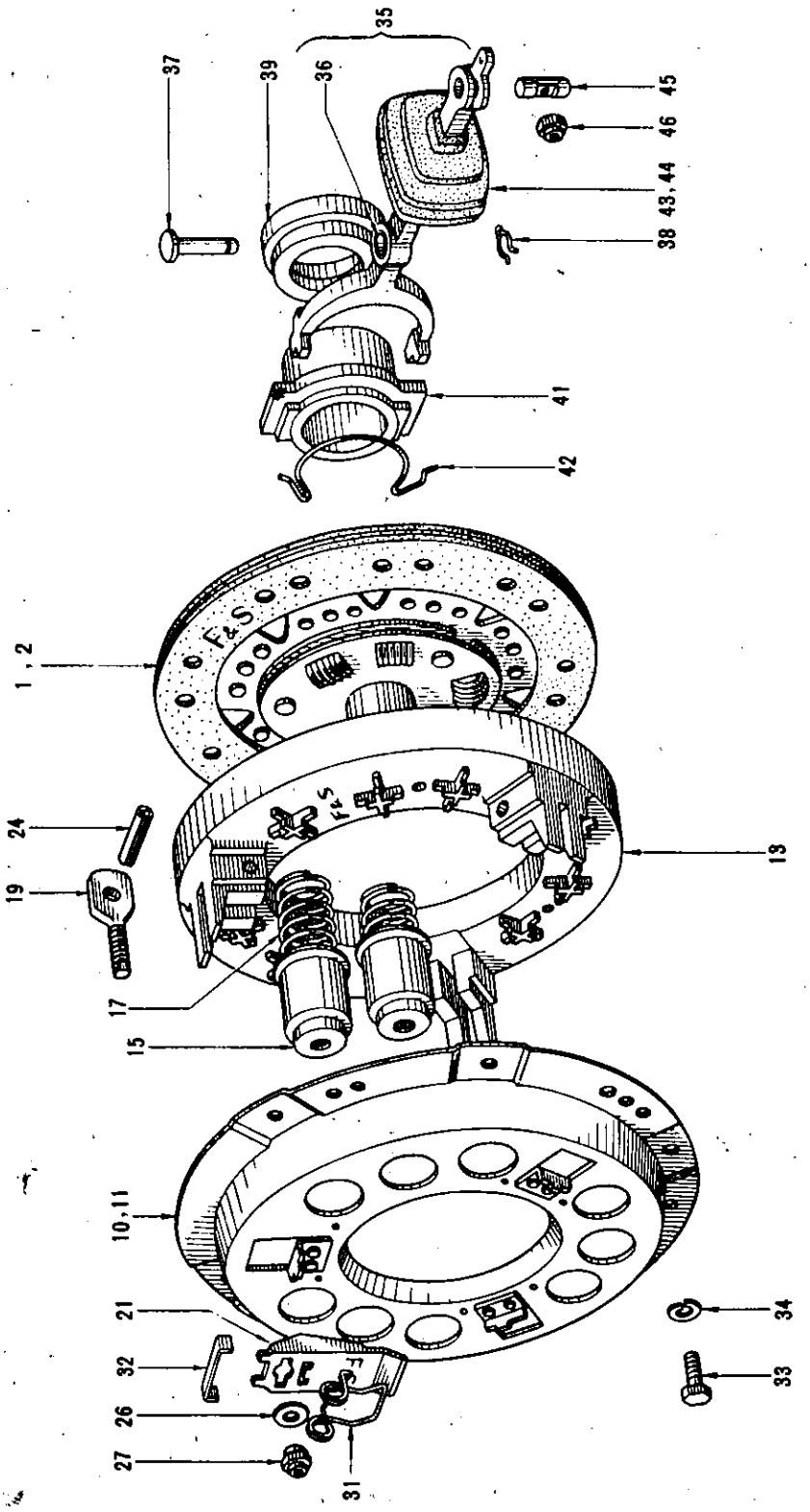
35
37
39
36
45
46
43, 44
38
41
42
1, 2
24
19
13
17
15
10, 11
21
32
26
27
31
34
33

S	KEY NO.	PART NO.	PART NAME	QTY	SALES UNIT	MODEL	ICA
			CLUTCH				
*	1	30100-10600	ASSY-DISC,CLUTCH(F & S)	1		P CLUTCH 4 10	
	2	30100-10601	ASSY-DISC,CLUTCH(F & S)	1		P CLUTCH 4 10	Y
*	3	30100-09403	ASSY-DISC,CLUTCH(SF 101)	1		P CLUTCH 4 10	
*	4	30100-09400	ASSY-DISC,CLUTCH(FERODO)	1		P CLUTCH 4 10	Y
*	5	30100-09402	ASSY-DISC,CLUTCH(TEXISTER)	1		P CLUTCH 4 10	Y
	6	30100-09404	ASSY-DISC,CLUTCH(C-40)	1		P CLUTCH 4 10	Y
	7	30210-09600	ASSY-COVER,CLUTCH,WITH PLATE(57KG)	1		P CLUTCH 4 10	
*	8	30210-10600	ASSY-COVER,CLUTCH,WITH PLATE(F & S,37KG)	1		P CLUTCH 4 10	
*	9	30210-10601	ASSY-COVER,CLUTCH,WITH PLATE(F & S,37KG)(AUG.-64)	1		P CLUTCH 4 10	Y
*	10	30209-10600	ASSY-COVER,CLUTCH(F & S)	1		P CLUTCH 4 10	
*	11	30209-10601	ASSY-COVER,CLUTCH(F & S)(AUG.-64)	1		P CLUTCH 4 10	Y
	12	30209-04400	ASSY-COVER,CLUTCH	1		P CLUTCH 4 10	
	13	30213-10600	PLATE-PRESSURE(F & S)	1		P CLUTCH 4 10	
	14	30213-04401	PLATE-PRESSURE	1		P CLUTCH 4 10	
	15	30215-10600	RETAINER-PRESSURE SPRING(F & S)	9	1	P CLUTCH 4 10	

Printed in Japan

REVISED: SEPTEMBER,1968

S	KEY NO.	PART NO.	PART NAME	Q'TY	SALES UNIT	MODEL	ICA
	16	30215-04400	RETAINER-PRESSURE SPRING	6		P CLUTCH 4 10	
	17	30214-10602	SPRING-PRESSURE(F & S, 37KG)	9		P CLUTCH 4 10	
	18	30214-09600	SPRING-PRESSURE(57KG)	6	50	P CLUTCH 4 10	
	19	30224-10600	BOLT-PRESSURE PLATE(F & S)	3		P CLUTCH 4 10	
	20	30224-04100	BOLT-PRESSURE PLATE	3		P CLUTCH 4 10	
*	21	30221-10600	LEVER-RELEASE(F & S)	3		P CLUTCH 4 10	
	22	30221-08000	LEVER-RELEASE	3		P CLUTCH 4 10	
	23	30230-04100	RETAINER-RELEASE LEVER	3		P CLUTCH 4 10	
	24	30225-35720	PIN-EYE BOLT(F & S)	3		P CLUTCH 4 10	
	25	30238-04100	PLATE-LOCK	3		P CLUTCH 4 10	
*	26	30239-10600	SEAT-RELEASE LEVER(F & S)	3		P CLUTCH 4 10	
	27	30229-10600	NUT-LOCK(F & S)	3		P CLUTCH 4 10	
*	28	00911-34500	NUT-LOCK	3	100	P CLUTCH 4 10	
	29	30222-08000	PLATE-RELEASE LEVER	1		P CLUTCH 4 10	
	30	30231-04400	SPRING-RELEASE LEVER	3		P CLUTCH 4 10	
	31	30231-10600	SPRING-RETRACTING(F & S)	3		P CLUTCH 4 10	
	32	30251-35720	SUPPORT-RELEASE LEVER	3		P CLUTCH 4 10	

Printed in Japan

REVISED: SEPTEMBER, 1965

S	KEY NO.	PART NO.	PART NAME	Q'TY	SALES UNIT	MODEL	ICA
*	33	00124-52200	BOLT TO FIX COVER	6	100	P CLUTCH 410	
*	34	00915-21500	WASHER-LOCK TO FIX COVER	6	50	P CLUTCH 410	
*	35	30530-10600	ASSY-LEVER,WITHDRAWAL, CLUTCH	1	1	P CLUTCH 410	
	36	30532-04100	BUSHING-WITHDRAWAL LEVER	1	10	P CLUTCH 410	
	37	30537-04100	PIN-WITHDRAWAL LEVER	1	5	P CLUTCH 410	
*	38	30541-08000	SPRING-RETAINER	1	10	P CLUTCH 410	
	39	30502-32200	BEARING-CLUTCH RELEASE (F & S)	1	1	P CLUTCH 410	
	40	30502-08000	BEARING-CLUTCH RELEASE	1	1	P CLUTCH 410	
*	41	30501-10602	SLEEVE-BEARING(F & S)	1	1	P CLUTCH 410	
	42	30514-08000	RETAINER-SPRING,WITHDRAWAL LEVER	1	5	P CLUTCH 410	
	43	30542-10600	COVER-DUST,WITHDRAWAL LEVER	1	10	3 SPEED 410	
*	44	30542-30000	COVER-DUST,WITHDRAWAL LEVER	1	10	4 SPEED 410	
	45	30547-32201	TRUNNION-WITHDRAWAL LEVER	1	50	410	
	46	30548-32201	NUT-LOCK,PUSH ROD	1	1	410	

Printed in Japan

REVISED: SEPTEMBER,1968

NOTE

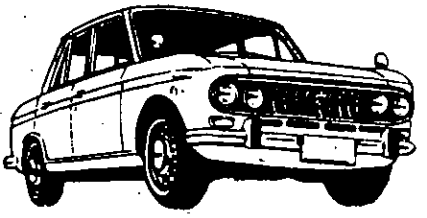

TRANSMISSION ASSEMBLIES

Note: This figure will be given later.

SEPTEMBER, 1968

Printed in Japan

S	KEY NO.	PART NO.	PART NAME	QTY	SALES UNIT	MODEL	ICA
			TRANSMISSION ASSEMBLIES				
*	1	32010-10652	ASSY-TRANSMISSION(SPEEDOMETER GEAR RATIO 5T:19T)	1		U.WU.410	
	2	32010-10653	ASSY-TRANSMISSION(SPEEDOMETER GEAR RATIO 4T:16T)	1	1	FOR F & S CLUTCH 410	
	3	32010-13250	ASSY-TRANSMISSION(SPEEDOMETER GEAR RATIO 4T:16T)	1	1	FOR F & S CLUTCH 410	N
*	4	32010-10851	ASSY-TRANSMISSION(SPEEDOMETER GEAR RATIO 4T:16T)	1		L.WL.410	
	5	32010-10852	ASSY-TRANSMISSION(SPEEDOMETER GEAR RATIO 5T:19T)	1	1	LU.WLU.410	
	6	32010-13950	ASSY-TRANSMISSION(SPEEDOMETER GEAR RATIO 5T:19T)	1		LU.WLU.410	N
*	7	32010-11751	ASSY-TRANSMISSION(SPEEDOMETER GEAR RATIO 5T:19T)	1		UN.WUN.410	
*	8	32010-12150	ASSY-TRANSMISSION(SPEEDOMETER GEAR RATIO 4T:16T)	1		LN.WLN.410	
*	9	32010-12151	ASSY-TRANSMISSION(SPEEDOMETER GEAR RATIO 5T:19T)	1		LUN.WLUN.410	
	10	32010-12450	ASSY-TRANSMISSION(MAIN DRIVE GEAR 20TH,SPEEDOMETER GEAR RATIO 18:5,FINAL GEAR RATIO 37:9)	1		UT,LUT,WUT,WLUT,SS 410(OP)4 SPEED 410	

REVISED: SEPTEMBER,1968

Printed in Japan

S	KEY NO.	PART NO.	PART NAME	Q'TY	SALES UNIT	MODEL	ICA
*	11	32010-12451	ASSY-TRANSMISSION(MAIN DRIVE GEAR 20TH,SPEEDOMETER GEAR RATIO 15:4,FINAL GEAR RATIO 35:8)	1		(OP)4 SPEED,SS 410	
	12	32010-12452	ASSY-TRANSMISSION(MAIN DRIVE GEAR 21TH,SPEEDOMETER GEAR RATIO 18:5,FINAL GEAR RATIO 37:9)	1		(OP)4 SPEED,SS 410	
*	13	32010-12453	ASSY-TRANSMISSION(MAIN DRIVE GEAR 21TH,SPEEDOMETER GEAR RATIO 18:5,FINAL GEAR RATIO 37:9)	1		(OP)4 SPEED,SS 410	

Printed in Japan

REVISED: SEPTEMBER,1968

NOTE

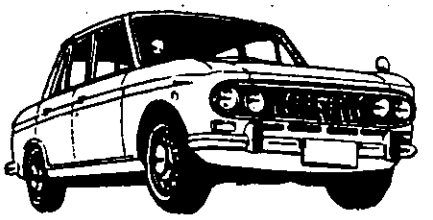

TRANSMISSION CASE (3 SPEED)

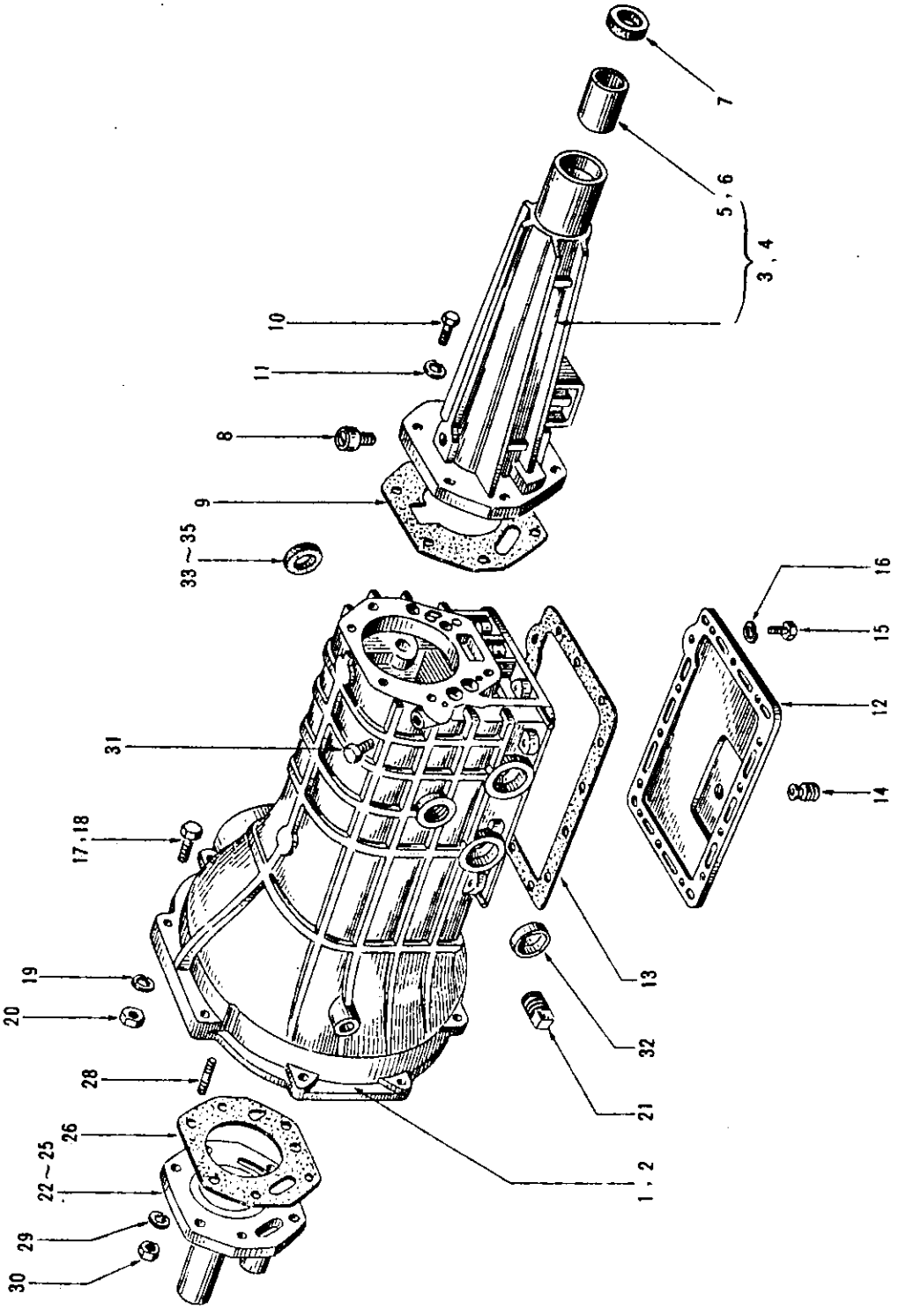

TRANSMISSION CASE (3-SPEED)

S	KEY NO.	PART NO.	PART NAME	QTY	SALES UNIT	MODEL	ICA
*	1	32101-10601	CASE-TRANSMISSION	1		3 SPEED R DRIVE 410	
*	2	32101-10801	CASE-TRANSMISSION	1		3 SPEED L DRIVE 410	
*	3	32130-10600	ASSY-EXTENSION,REAR	1		3 SPEED 410	
*	4	32130-13200	ASSY-EXTENSION,REAR	1	1	3 SPEED 410	Y
*	5	32132-07200	BUSHING-REAR EXTENSION	1	2	3 SPEED 410	
	6	32132-13200	BUSHING-REAR EXTENSION	1		3 SPEED 410	Y
	7	32136-07200	SEAL-OIL,REAR EXTENSION	1	10	3 SPEED 410	
	8	38322-55100	ASSY-BREATHER	1	10	3 SPEED 410	
	9	32134-10600	GASKET-REAR EXTENSION	1	10	3 SPEED 410	
	10	00114-63510	BOLT TO FIX REAR EXTENSION	6	20	3 SPEED 410	
	11	00915-21610	WASHER-LOCK TO FIX REAR EXTENSION	6		3 SPEED 410	
*	12	32161-10600	COVER-BOTTOM	1		3 SPEED 410	
*	13	32162-10600	GASKET-BOTTOM COVER	1	10	3 SPEED 410	
*	14	32103-36900	ASSY-PLUG,DRAIN	1		3 SPEED 410	
	15	00114-52210	BOLT TO FIX BOTTOM COVER	14		3 SPEED 410	

Printed in Japan

REVISED: SEPTEMBER,1968

S	KEY NO.	PART NO.	PART NAME	Q'TY	SALES UNIT	MODEL	ICA
	16	00915-11510	WASHER-LOCK TO FIX BOTTOM COVER	14		3 SPEED 410	
	17	32012-04100	BOLT TO FIX TRANSMISSION TO ENGINE REAR PLATE	5	10	3 SPEED 410	
	18	00124-54040	BOLT TO FIX TRANSMISSION TO ENGINE REAR PLATE	1		3 SPEED 410	
	19	00915-21510	WASHER-LOCK TO FIX TRANSMISSION TO ENGINE REAR PLATE	6		3 SPEED 410	
*	20	00911-14500	NUT TO FIX TRANSMISSION TO ENGINE REAR PLATE	6	100	3 SPEED 410	
*	21	00931-11200	PLUG-TAPER	1	50	3 SPEED 410	
	22	32111-10601	COVER-FRONT,TRANSMISSION CASE	1		P CLUTCH 3 SPEED 410	
	23	32111-13200	COVER-FRONT,TRANSMISSION CASE(FROM SEPT.-64)	1	1	P CLUTCH 3 SPEED 410	N
	24	32111-11700	COVER-FRONT,TRANSMISSION CASE	1		A CLUTCH 410	
	25	32111-14100	COVER-FRONT,TRANSMISSION CASE(FROM SEPT.-64)	1		A CLUTCH 410	N
	26	32112-10600	GASKET-FRONT COVER	1	10	3 SPEED 410	
	27	32113-13200	SEAL-OIL,FRONT COVER(FROM SEPT.-64)	1	10	3 SPEED 410	
	28	00284-52200	STUD TO FIX FRONT COVER	6	50	3 SPEED 410	
	29	00915-11510	WASHER-LOCK TO FIX FRONT COVER	6		3 SPEED 410	
	30	00911-14510	NUT TO FIX FRONT COVER	6		3 SPEED 410	
	31	32816-36900	PLUG-INTER LOCK HOLE	1		3 SPEED 410	

Printed in Japan

REVISED: SEPTEMBER,1968

S	KEY NO.	PART NO.	PART NAME	Q'TY	SALES UNIT	MODEL	ICA
	32	32920-36900	PLUG-CROSS SHAFT	1		3 SPEED 410	
*	33	32884-36900	OIL SEAL-CROSS SHAFT	2	10	3 SPEED R DRIVE 410	
*	34	32884-61000	OIL SEAL-CROSS SHAFT	2	50	3 SPEED R DRIVE 410	
*	35	32884-61000	OIL SEAL-CROSS SHAFT(FROM SEPT.-64)	2	50	3 SPEED 410	Y

Printed in Japan

REVISED: SEPTEMBER,1968

NOTE

NOTE

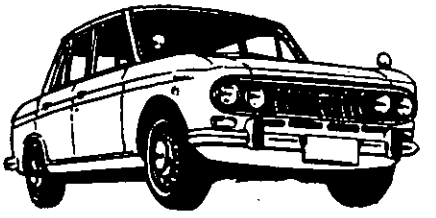

TRANSMISSION CASE (4 SPEED)

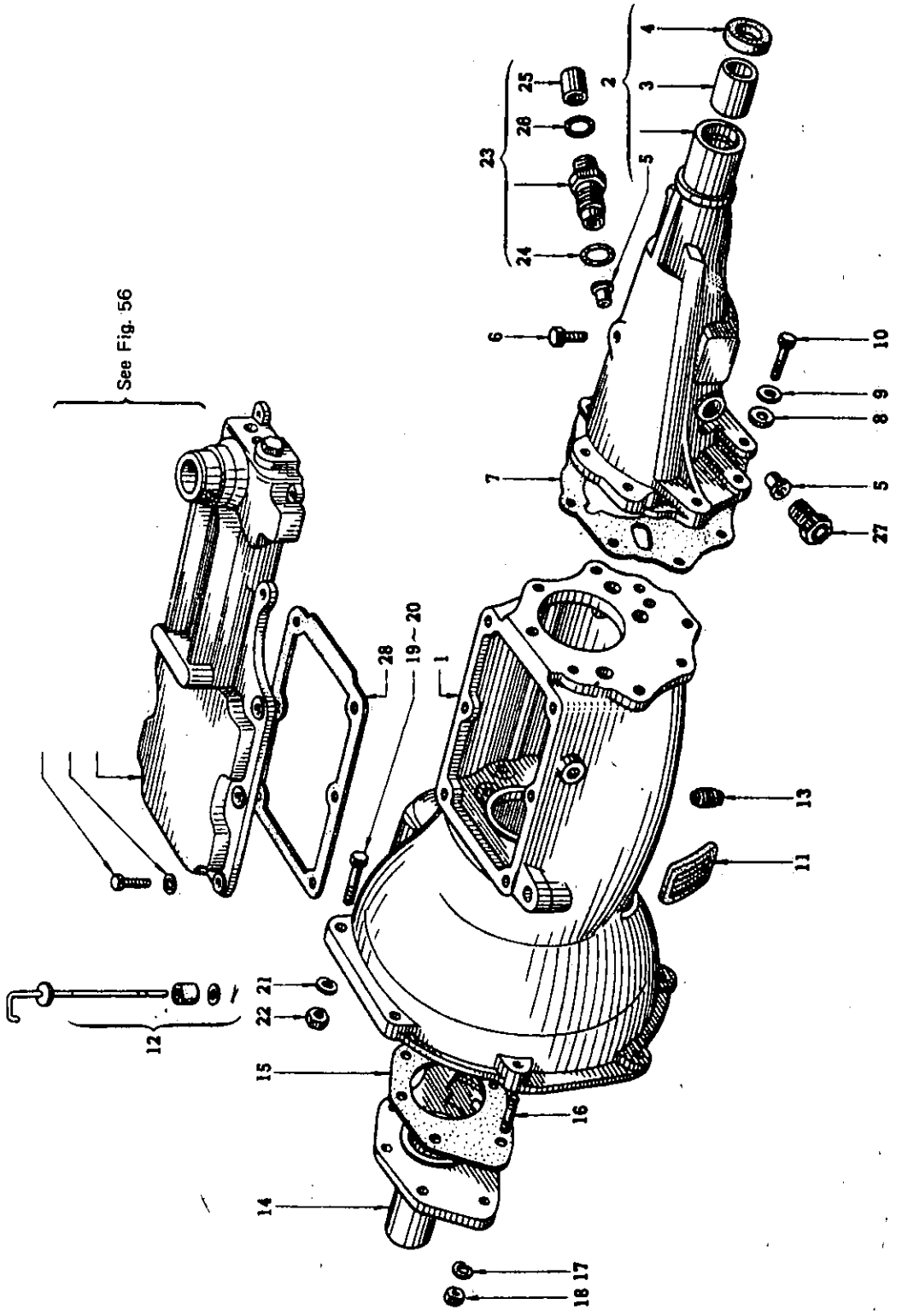

S	KEY NO.	PART NO.	PART NAME	Q'TY	SALES UNIT	MODEL	ICA
			TRANSMISSION CASE (4-SPEED)				
	1	32101-09602	CASE-TRANSMISSION	1		4 SPEED,SS 410	
	2	32130-08000	ASSY-EXTENSION,REAR	1		4 SPEED,SS 410	
*	3	32132-07200	BUSHING-REAR EXTENSION	1	2	4 SPEED,SS 410	
	4	32136-07200	SEAL-OIL,REAR EXTENSIO N	1	10	4 SPEED,SS 410	
	5	32706-26760	BUSHING-SPEEDOMETER PI NION	2		4 SPEED,SS 410	
	6	38322-55100	ASSY-BREATHER	1	10	4 SPEED,SS 410	
	7	32134-01300	GASKET-REAR EXTENSION	1	50	4 SPEED,SS 410	
	8	32137-08000	WASHER TO FIX REAR EXT ENSION	8	1	4 SPEED,SS 410	
	9	32138-08000	WASHER TO FIX REAR EXT ENSION	8		4 SPEED,SS 410	
	10	32135-08001	BOLT TO FIX REAR EXTEN SION	8		4 SPEED,SS 410	
	11	30543-01301	BOOT-RUBBER	1	5	4 SPEED,SS 410	
*	12	32150-01300	ASSY-STICK,OIL LEVEL D IP	1	1	4 SPEED,SS 410	
*	13	32103-04100	ASSY-PLUG,DRAIN	1	10	4 SPEED,SS 410	
	14	32111-09600	COVER-FRONT,TRANSMISSI ON CASE	1	1	4 SPEED,SS 410	
	15	32112-30800	GASKET-FRONT COVER	1	10	4 SPEED,SS 410	

REVISED: SEPTEMBER,1968

Printed in Japan

S	KEY NO.	PART NO.	PART NAME	Q'TY	SALES UNIT	MODEL	ICA
	16	32114-00100	STUD TO FIX FRONT COVER	7	10	4 SPEED,SS 410	
	17	00915-11510	WASHER-LOCK TO FIX FRONT COVER	7		4 SPEED,SS 410	
	18	00911-14510	NUT TO FIX FRONT COVER	7		4 SPEED,SS 410	
	19	00124-53510	BOLT TO FIX TRANSMISSION CASE	1	50	4 SPEED,SS 410	
	20	32012-04100	BOLT TO FIX TRANSMISSION CASE	5	10	4 SPEED,SS 410	
*	21	00915-21500	WASHER-LOCK TO FIX TRANSMISSION CASE	6	50	4 SPEED,SS 410	
	22	00911-14510	NUT TO FIX TRANSMISSION CASE	6		4 SPEED,SS 410	
	23	32707-04100	ASSY-SLEVE,SPEEDAMETER PINION	1	10	4 SPEED,SS 410	
	24	32709-04100	RING-O,SPEEDOMETER PINION	1	10	4 SPEED,SS 410	
	25	32717-04100	RETAINER-O RING	1	10	4 SPEED,SS 410	
	26	32710-04100	RING-O,PINION SLEEVE	1	10	4 SPEED,SS 410	
	27	32718-04103	PLUG-SPEEDOMETER PINION	1	10	4 SPEED,SS 410	
	28	32169-12400	GASKET-COVER,TRANSMISSION CASE	1	10	4 SPEED,SS 410	

REVISED: SEPTEMBER,1968

Printed in Japan

NOTE

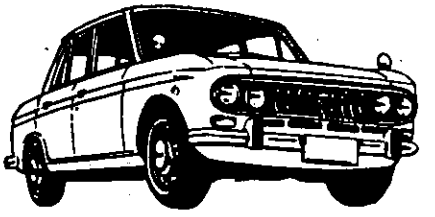

TRANSMISSION GEAR (3 SPEED)

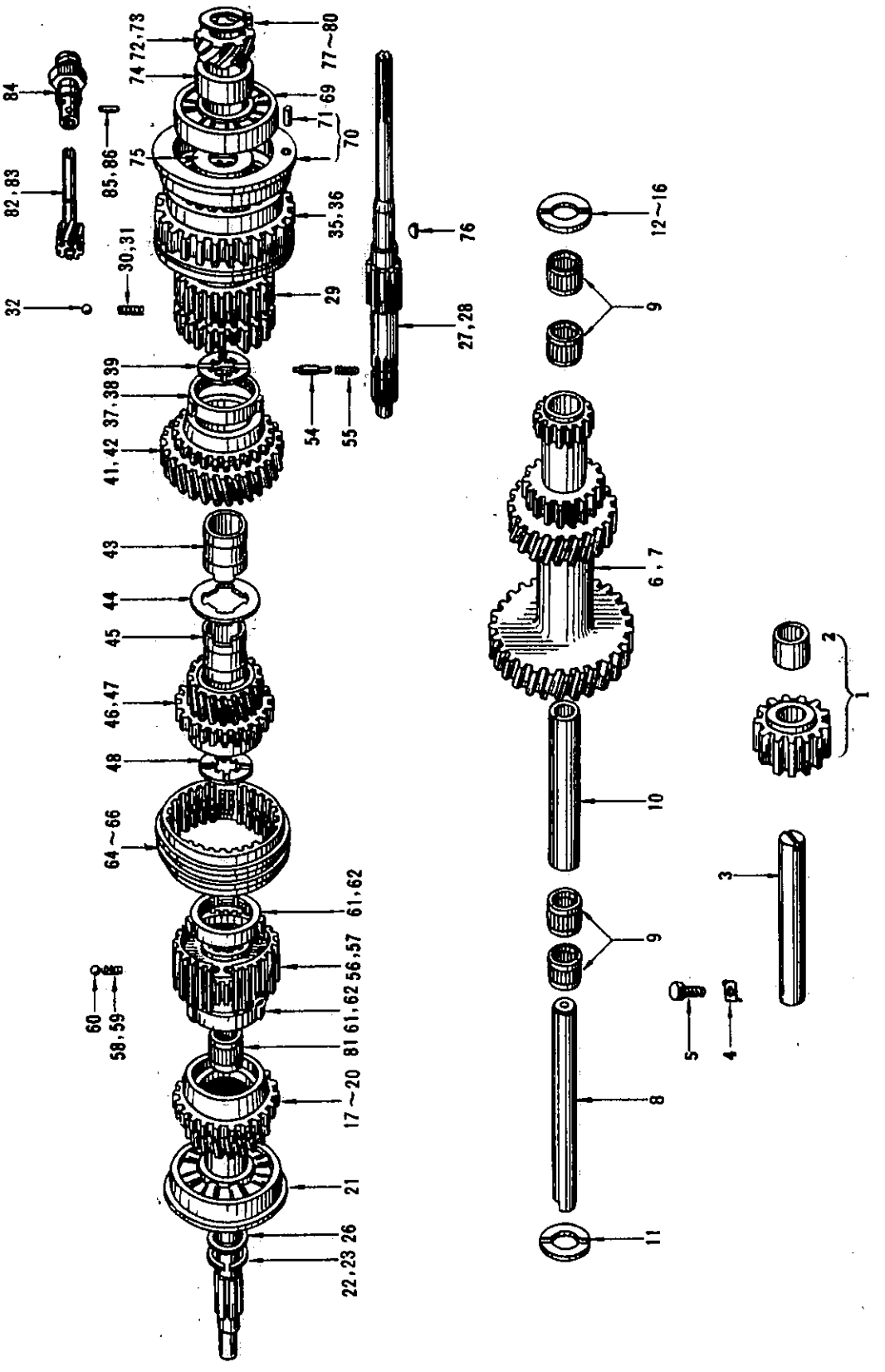

SEPTEMBER, 1968 Printed in Japan

TRANSMISSION GEAR (3-SPEED)

S	KEY NO.	PART NO.	PART NAME	Q'TY	SALES UNIT	MODEL	ICA
*	1	32280-10601	ASSY-GEAR,REVERSE(16T)	1	1	30 SPEED 41	
*	2	32283-10600	BUSHING-REVERSE GEAR	1	10	30 SPEED 41	
	3	32281-10600	SHAFT-REVERSE IDLER	1		30 SPEED 41	
	4	32291-10600	WASHER-LOCK TO FIX REVERSE SHAFT	1		30 SPEED 41	
	5	32290-10600	SCREW-SET TO FIX REVERSE SHAFT	1	10	30 SPEED 41	
*	6	32213-10601	GEAR-COUNTER(23T,27T,16T,16T)	1	1	30 SPEED 41	
	7	32213-13200	GEAR-COUNTER(33T,27T,17T,16T)(FROM SEPT.-64)	1		30 SPEED 41	N
	8	32211-10600	SHAFT-COUNTER	1	1	30 SPEED 41	
*	9	32219-10600	BEARING-NEEDLE	4		30 SPEED 41	
	10	32214-10600	PIECE-DISTANCE	1	10	30 SPEED 41	
*	11	32224-10600	WASHER-THRUST,COUNTER,FRONT	1	10	30 SPEED 41	
*	12	32225-10600	WASHER-THRUST,COUNTER,REAR(4.03T)	1	10	30 SPEED 41	
	13	32226-10600	WASHER-THRUST,COUNTER,REAR(3.98T)	1	10	30 SPEED 41	
	14	32227-10600	WASHER-THRUST,COUNTER,REAR(3.93T)	1	5	30 SPEED 41	
	15	32228-10600	WASHER-THRUST,COUNTER,REAR(3.88T)	1	10	30 SPEED 41	

Printed in Japan

REVISED: SEPTEMBER,1968

S	KEY NO.	PART NO.	PART NAME	QTY	SALES UNIT	MODEL	ICA
	16	32229-10600	WASHER-THRUST,COUNTER, REAR(3.83T)	1	10	3 SPEED 410	
*	17	32201-10600	GEAR-MAIN DRIVE(17T,30T)	1		P CLUTCH 3 SPEED 410	
	18	32201-13200	GEAR-MAIN DRIVE(17T,36T)(FROM SEPT.-64)	1		P CLUTCH 3 SPEED 410	N
*	19	32201-11700	GEAR-MAIN DRIVE(17T,30T)	1	1	A CLUTCH 3 SPEED 410	
	20	32201-14100	GEAR-MAIN DRIVE(17T,36T)(FROM SEPT.-64)	1	1	A CLUTCH 3 SPEED 410	N
	21	32203-10600	BEARING-MAIN DRIVE GEAR	1		3 SPEED 410	
	22	32204-08001	RING-SNAP,MAIN DRIVE GEAR(1.61T)USE,FIT ONE	1	5	3 SPEED 410	
	23	32204-08002	RING-SNAP,MAIN DRIVE GEAR(1.64T)USE,FIT ONE	1	5	3 SPEED 410	
	24	32204-08003	RING-SNAP,MAIN DRIVE GEAR(1.74T)USE,FIT ONE	1	5	3 SPEED 410	
	25	32204-08004	RING-SNAP,MAIN DRIVE GEAR(1.77T)USE,FIT ONE	1		3 SPEED 410	
	26	32205-08002	SPACER-MAIN DRIVE GEAR (1.6T)	1	10	3 SPEED 410	
	27	32241-10600	SHAFT-MAIN	1		3 SPEED 410	
	28	32241-13200	SHAFT-MAIN(FROM SEPT.-64)	1	1	3 SPEED 410	N
	29	32601-13200	HUB-SYNCHRONIZER,1ST(FROM SEPT.-64)	1	1	3 SPEED 410	N
	30	32602-26760	SPRING-SYNCHRONIZER	3	50	3 SPEED 410	
	31	32602-32200	SPRING-SYNCHRONIZER(FROM SEPT.-64)	3	10	3 SPEED 410	N
	32	32603-26760	BALL-SYNCHRONIZER	3	10	3 SPEED 410	

REVISED: SEPTEMBER,1968

Printed in Japan

S	KEY NO.	PART NO.	PART NAME	Q'TY	SALES UNIT	MODEL	ICA
*	33	32608-36700	INSERT-SHIFTING,1ST SPEED(FROM SEPT.-64)	3	10	3 SPEED 410	N
	34	32234-36900	RING-SNAP,SHIFTING INSERT(FROM SEPT.-64)	1	50	3 SPEED 410	
*	35	32243-10601	GEAR-REVERSE,MAIN SHAFT(34T)	1	1	3 SPEED 410	
	36	32243-13200	GEAR-REVERSE,MAIN SHAFT(34T)(FROM SEPT.-64)	1	1	3 SPEED 410	N
	37	32604-08003	RING-BAULK,1ST SPEED	1	1	3 SPEED 410	
*	38	32604-61000	RING-BAULK,1ST SPEED(FROM SEPT.-64)	1	1	3 SPEED 410	N
*	39	32246-08000	WASHER-THRUST,MAIN SHAFT REAR(UP TO SEPT.-64)	1	5	3 SPEED 410	
*	40	32251-08000	GEAR-1ST SPEED,MAIN SHAFT(29T)	1	1	3 SPEED 410	
*	41	32251-10600	GEAR-1ST SPEED,MAIN SHAFT(29T)	1	1	3 SPEED 410	Y
	42	32251-13200	GEAR-1ST SPEED,MAIN SHAFT(17T)(FROM SEPT.-64)	1	1	3 SPEED 410	N
	43	32252-26761	BUSHING-1ST SPEED GEAR (UP TO 64-9)	1	5	3 SPEED 410	
*	44	32253-26761	WASHER(UP TO SEPT.-64)	1	5	3 SPEED 410	
	45	32262-26761	BUSHING-2ND SPEED GEAR (UP TO SEPT.-64)	1	5	3 SPEED 410	
*	46	32261-26761	GEAR-3RD SPEED(24T)	1		3 SPEED 410	
	47	32261-13200	GEAR-3RD SPEED(24T)(FROM SEPT.-64)	1	1	3 SPEED 410	N
*	48	32277-09400	WASHER-THRUST(4.10T)(UP TO SEPT.-64)	1	5	3 SPEED 410	
*	49	32264-09400	WASHER-THRUST(3.95T)(UP TO SEPT.-64)	1	10	3 SPEED 410	

REVISED: SEPTEMBER,1968

Printed in Japan

S	KEY NO.	PART NO.	PART NAME	Q'TY	SALES UNIT	MODEL	ICA
*	50	32265-09400	WASHER-THRUST(3.98T)(UP TO SEPT.-64)	1	5	3 SPEED 410	
*	51	32266-09400	WASHER-THRUST(4.01T)(UP TO SEPT.-64)	1	5	3 SPEED 410	
*	52	32267-09400	WASHER-THRUST(4.04T)(UP TO SEPT.-64)	1	5	3 SPEED 410	
*	53	32268-09400	WASHER-THRUST(4.07T)(UP TO SEPT.-64)	1	5	3 SPEED 410	
	54	32247-26760	PEG-THRUST WASHER	1	10	3 SPEED 410	
	55	32248-26760	SPRING(FOR PEG)	1	1	3 SPEED 410	
	56	32605-02700	HUB-SYNCHRONIZER	1		3 SPEED 410	
	57	32605-13200	HUB-SYNCHRONIZER(FROM SEPT.-64)	1	1	3 SPEED 410	N
	58	32602-26760	SPRING-SYNCHRONIZER(UP TO SEPT.-64)	3	50	3 SPEED 410	
	59	32603-36900	SPRING-SYNCHRONIZER,2ND & 3RD(FROM SEPT.-64)	2	10	3 SPEED 410	N
	60	32603-26760	BALL-SYNCHRONIZER	3	10	3 SPEED 410	
*	61	32607-02701	RING-BAULK	2	5	3 SPEED 410	
	62	32607-10600	RING-BAULK	2		3 SPEED 410	Y
*	63	32604-61000	RING-BAULK(FROM SEPT.-64)	2	1	3 SPEED 410	N
	64	32606-02700	SLEEVE-COUPLING	1		3 SPEED 410	
	65	32606-10600	SLEEVE-COUPLING	1		3 SPEED 410	Y
	66	32606-13200	SLEEVE-COUPLING(FROM SEPT.-64)	1	1	3 SPEED 410	N

Printed in Japan

REVISED: SEPTEMBER,1968

S	KEY NO.	PART NO.	PART NAME	Q'TY	SALES UNIT	MODEL	ICA
	67	32609-36900	INSERT-SHIFTING,2ND & 3RD(FROM SEPT.-64)	3		3 SPEED 410	
	68	32263-36900	RING-SNAP,SYNCHRONIZER HUB(FROM SEPT.-64)	1	10	3 SPEED 410	
	69	32273-36900	BEARING-MAIN SHAFT	1	1	3 SPEED 410	
*	70	32120-10600	ASSY-RETAINER,BEARING	1	1	3 SPEED 410	
	71	32124-26760	PEG-LOCATING	1		3 SPEED 410	
	72	32701-10600	GEAR-DRIVING,SPEEDOMETER(4T)	1	1	P CLUTCH 3 SPEED 410	
	73	32701-10800	GEAR-DRIVING,SPEEDOMETER(5T)	1	1	A CLUTCH 3 SPEED 410	
	74	32128-07200	PIECE-DISTANCE	1	1	3 SPEED 410	
	75	32274-10600	SPACER-BEARING	1		3 SPEED 410	
	76	00927-21300	KEY-WOODRUFF	1	100	3 SPEED 410	
	77	32708-10600	RING-SNAP(1.30T)	1	10	3 SPEED 410	
	78	32708-10601	RING-SNAP(1.45T)	1	10	3 SPEED 410	
	79	32708-10602	RING-SNAP(1.55T)	1	10	3 SPEED 410	
	80	32708-10603	RING-SNAP(1.65T)	1	10	3 SPEED 410	
	81	32272-36900	BEARING-NEEDLE,PILOT	1	1	3 SPEED 410	
	82	32703-37000	ASSY-PINION,SPEEDOMETER(16T)	1	1	L.WL.LN.WLN 410	
	83	32703-10800	ASSY-PINION,SPEEDOMETER(19T)	1		U.WU.LU.WLU.UN.WUN.LUN.WLUN.410	

Printed in Japan

REVISED: SEPTEMBER,1968

S	KEY NO.	PART NO.	PART NAME	Q'TY	SALES UNIT	MODEL	ICA
	84	32707-36900	ASSY-SLEEVE,SPEEDOMETER PINION	1		3 SPEED 410	
*	85	32712-36900	PIN	1	10	3 SPEED 410	
	86	32712-61000	PIN(FROM SEPT.-64)	1		3 SPEED 410	Y

REVISED: SEPTEMBER,1968

Printed in Japan

NOTE

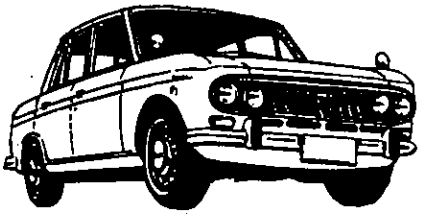

TRANSMISSION GEAR (4 SPEED)

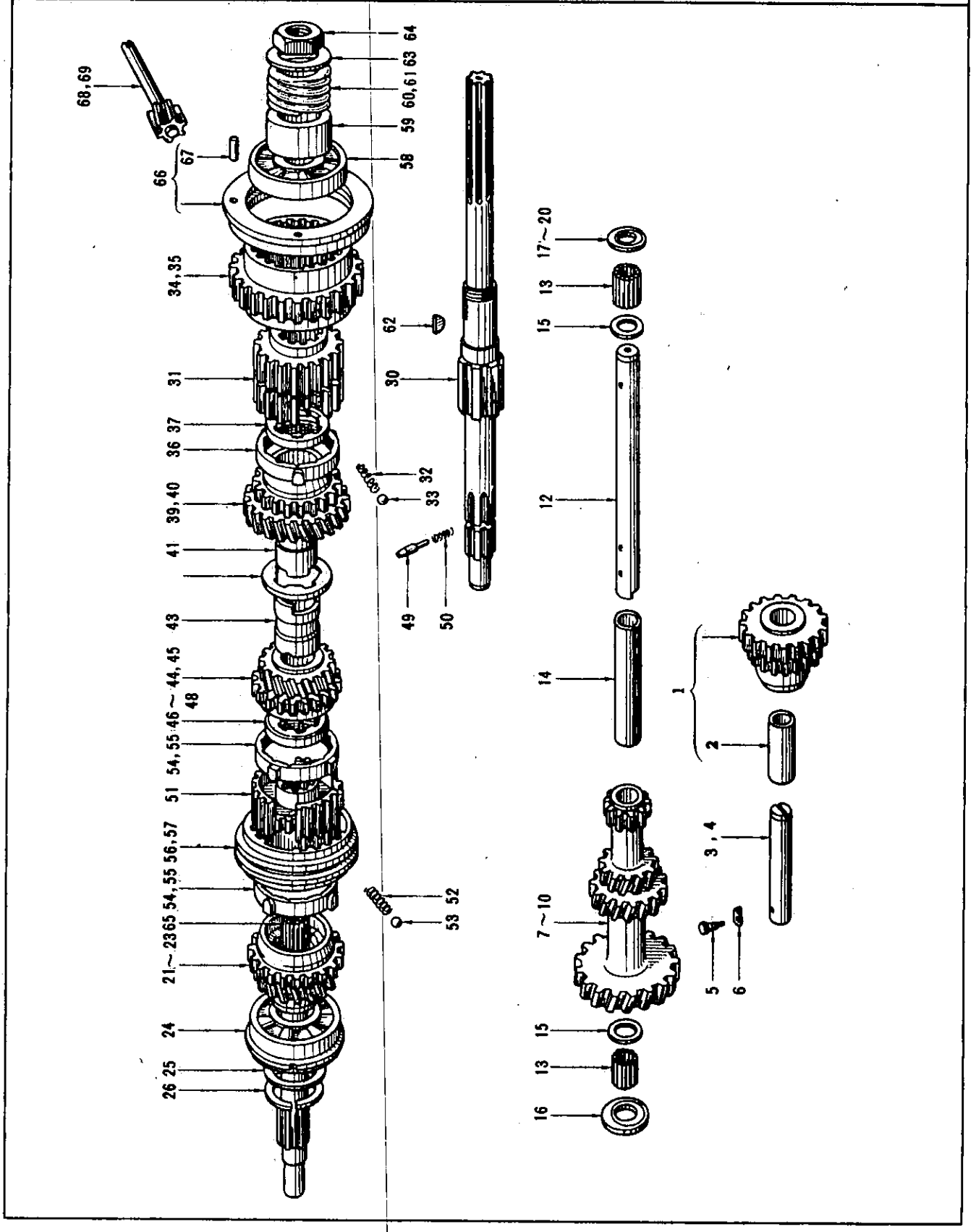

TRANSMISSION GEAR (4-SPEED)

S	KEY NO.	PART NO.	PART NAME	Q'TY	SALES UNIT	MODEL	ICA
	1	32280-27160	ASSY-GEAR,REVERSE(17T)	1	1	4 SPEED,SS 410	
	2	32283-00100	BUSHING-REVERSE GEAR	1	10	4 SPEED,SS 410	
*	3	32281-27160	SHAFT-REVERSE GEAR	1	1	4 SPEED,SS 410	
	4	32281-09500	SHAFT-REVERSE GEAR(FROM SEPT.-64)	1	5	4 SPEED,SS 410	Y
	5	32290-10600	SCREW-SET TO FIX REVERSE SHAFT	1	10	4 SPEED,SS 410	
*	6	32291-09500	WASHER-LOCK TO FIX REVERSE SHAFT	1	10	4 SPEED,SS 410	
*	7	32213-27160	GEAR-COUNTER(31T,26T,20T,11T)	1	1	4 SPEED,SS 410	
	8	32213-32200	GEAR-COUNTER(31T,26T,20T,11T,)(FROM SEPT.-64)	1	1	4 SPEED,SS 410	Y
*	9	32213-12200	GEAR-COUNTER(29T,26T,20T,11T)	1	1	(OP)4 SPEED,SS 410	
	10	32213-12201	GEAR-COUNTER(29T,26T,20T,11T)(FROM SEPT.-64)	1		(OP)4 SPEED,SS 410	Y
	11	32211-27161	SHAFT-COUNTER	1	1	4 SPEED,SS 410	
	12	32211-07200	SHAFT-COUNTER(FROM SEPT.-64)	1		4 SPEED,SS 410	Y
	13	32219-26760	ROLLER-NEEDLE	40	1	4 SPEED,SS 410	
	14	32214-26760	PIECE-DISTANCE,	1	10	4 SPEED,SS 410	
	15	32218-26760	RING-RETAINER,NEEDLE ROLLER	2	5	4 SPEED,SS 410	

Printed in Japan
REVISED: SEPTEMBER,1968

S	KEY NO.	PART NO.	PART NAME	Q'TY	SALES UNIT	MODEL	ICA
	16	32224-26760	WASHER-THRUST,COUNTER FRONT	1	10	4 SPEED,SS 410	
	17	32226-26760	WASHER-THRUST,COUNTER, REAR(3.9T)	1		4 SPEED,SS 410	
	18	32227-26760	WASHER-THRUST,COUNTER, REAR(4.0T)	1	10	4 SPEED,SS 410	
	19	32228-26760	WASHER-THRUST,COUNTER, REAR(4.1T)	1	10	4 SPEED,SS 410	
	20	32229-26760	WASHER-THRUST,COUNTER, REAR(4.2T)	1	1	4 SPEED,SS 410	
	21	32201-09601	GEAR-MAIN DRIVE(20T)(FROM SEPT.-64)	1		4 SPEED,SS 410	Y
*	22	32201-12400	GEAR-MAIN DRIVE(21T)	1	1	(OP)4 SPEED,SS 410	
	23	32201-12401	GEAR-MAIN DRIVE(21T)	1	1	(OP)4 SPEED,SS 410	Y
	24	32203-26760	BEARING-MAIN DRIVE GEAR	1	10	4 SPEED,SS 410	
	25	32205-08002	SPACER-BEARING(1.6T)	1	10	4 SPEED,SS 410	
	26	32204-08001	RING-SNAP,MAIN DRIVE GEAR(1.61T)	1	5	4 SPEED,SS 410	
	27	32204-08002	RING-SNAP,MAIN DRIVE GEAR(1.65T)	1	5	4 SPEED,SS 410	
	28	32204-08003	RING-SNAP,MAIN DRIVE GEAR(1.74T)	1	5	4 SPEED,SS 410	
	29	32204-08004	RING-SNAP,MAIN DRIVE GEAR(1.77T)	1		4 SPEED,SS 410	
*	30	32241-07200	SHAFT,MAIN	1		4 SPEED,SS 410	
	31	32601-02700	HUB-SYNCHRONIZER	1	1	4 SPEED,SS 410	
	32	32602-26760	SPRING-SYNCHRONIZER HUB	6	50	4 SPEED,SS 410	

Printed in Japan

REVISED: SEPTEMBER,1968

S	KEY NO.	PART NO.	PART NAME	Q'TY	SALES UNIT	MODEL	ICA
	33	32603-26760	BALL-SYNCHRONIZER HUB	6	10	4 SPEED,SS 410	
*	34	32243-26760	GEAR-MAIN SHAFT(28T)	1		4 SPEED,SS 410	
	35	32243-07200	GEAR-MAIN SHAFT(28T)(FROM SEPT.-64)	1		4 SPEED,SS 410	Y
*	36	32604-02701	RING-BAULK,2ND SPEED	1		4 SPEED,SS 410	
	37	32246-26760	WASHER-THRUST,MAIN SHAFT REAR	1		4 SPEED,SS 410	
	38	32246-32200	WASHER-THRUST,MAIN SHAFT REAR(FROM SEPT.-64)	1	5	4 SPEED,SS 410	Y
*	39	32251-26761	GEAR-2ND SPEED(31T)	1		4 SPEED,SS 410	
	40	32251-07200	GEAR-2ND SPEED(31T,27T)	1		4 SPEED,SS 410	Y
	41	32252-26761	BUSHING-2ND SPEED GEAR	1	5	4 SPEED,SS 410	
	42	32253-26760	WASHER-THRUST,MAIN SHAFT	1		4 SPEED,SS 410	
	43	32262-26761	BUSHING-3RD SPEED GEAR	1	5	4 SPEED,SS 410	
*	44	32261-27161	GEAR-3RD SPEED(24T)	1		4 SPEED,SS 410	
	45	32261-09600	GEAR-3RD SPEED(31T,27T)	1		4 SPEED,SS 410	Y
*	46	32264-26761	WASHER-THRUST,MAIN SHAFT,FRONT(3.9T)	1		4 SPEED,SS 410	
*	47	32265-26761	WASHER-THRUST,MAIN SHAFT,FRONT(4.0T)	1	5	4 SPEED,SS 410	
*	48	32266-26761	WASHER-THRUST,MAIN SHAFT,FRONT(4.1T)	1	5	4 SPEED,SS 410	
	49	32247-26760	PEG-LOCKING	1	10	4 SPEED,SS 410	

Printed in Japan

REVISED: SEPTEMBER,1968

S	KEY NO.	PART NO.	PART NAME	Q'TY	SALES UNIT	MODEL	ICA
	50	32248-26760	SPRING-LOCKING,PEG	1	1	4 SPEED,SS 410	
	51	32605-02700	HUB-SYNCHRO,3RD & 4TH SPEED	1		4 SPEED,SS 410	
	52	32602-26760	SPRING-SYNCHRONIZER HUB	3	50	4 SPEED,SS 410	
	53	32603-26760	BALL-SYNCHRONIZER HUB	6	10	4 SPEED,SS 410	
*	54	32607-02701	RING-BAULK,3RD & 4TH SPEED	2	5	4 SPEED,SS 410	
	55	32607-10600	RING-BAULK,3RD & 4TH SPEED	2		4 SPEED,SS 410	Y
	56	32606-02700	SLEEVE-SYNCHRONIZER,3RD & 4TH SPEED	1		4 SPEED,SS 410	
	57	32606-10600	SLEEVE-SYNCHRONIZER,3RD & 4TH SPEED	1		4 SPEED,SS 410	Y
	58	32273-26760	BEARING-MAIN SHAFT	1		4 SPEED,SS 410	
	59	32128-07200	PIECE-DISTANCE,MAIN SHAFT	1	1	4 SPEED,SS 410	
	60	32701-10400	GEAR-DRIVE,SPEEDOMETER (5T)	1	1	4 SPEED,SS 410	
	61	32701-07200	GEAR-DRIVE,SPEEDOMETER (4T)	1	1	(OP)4 SPEED,SS 410	
	62	00927-21300	KEY-WOODRUFF	1	100	4 SPEED,SS 410	
	63	34414-26760	WASHER-LOCK	1		4 SPEED,SS 410	
	64	32142-26760	NUT-MAIN SHAFT	1	10	4 SPEED,SS 410	
	65	32272-26760	BEARING-MAIN SHAFT PILOT	18	2	4 SPEED,SS 410	
*	66	32120-09400	ASSY-RETAINER,MAIN SHAFT BERING	1		4 SPEED,SS 410	

Printed in Japan

REVISED: SEPTEMBER,1968

S	KEY NO.	PART NO.	PART NAME	Q'TY	SALES UNIT	MODEL	ICA
	67	32124-26760	PEG-LOCATING	1		4 SPEED,SS 410	
	68	32703-04100	ASSY-PINION,SPEEDOMETER(18T)	1	2	4 SPEED,SS 410	
	69	32703-07400	ASSY-PINION,SPEEDOMETER(15T)	1	2	4 SPEED,SS 410	

Printed in Japan

REVISED: SEPTEMBER,1968

NOTE

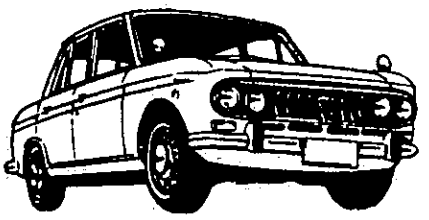

NOTE

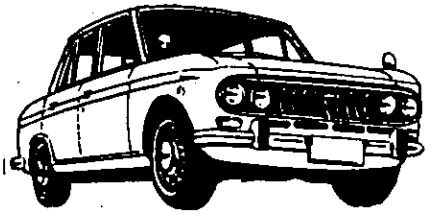

TRANSMISSION FORK & ROD (3 SPEED)

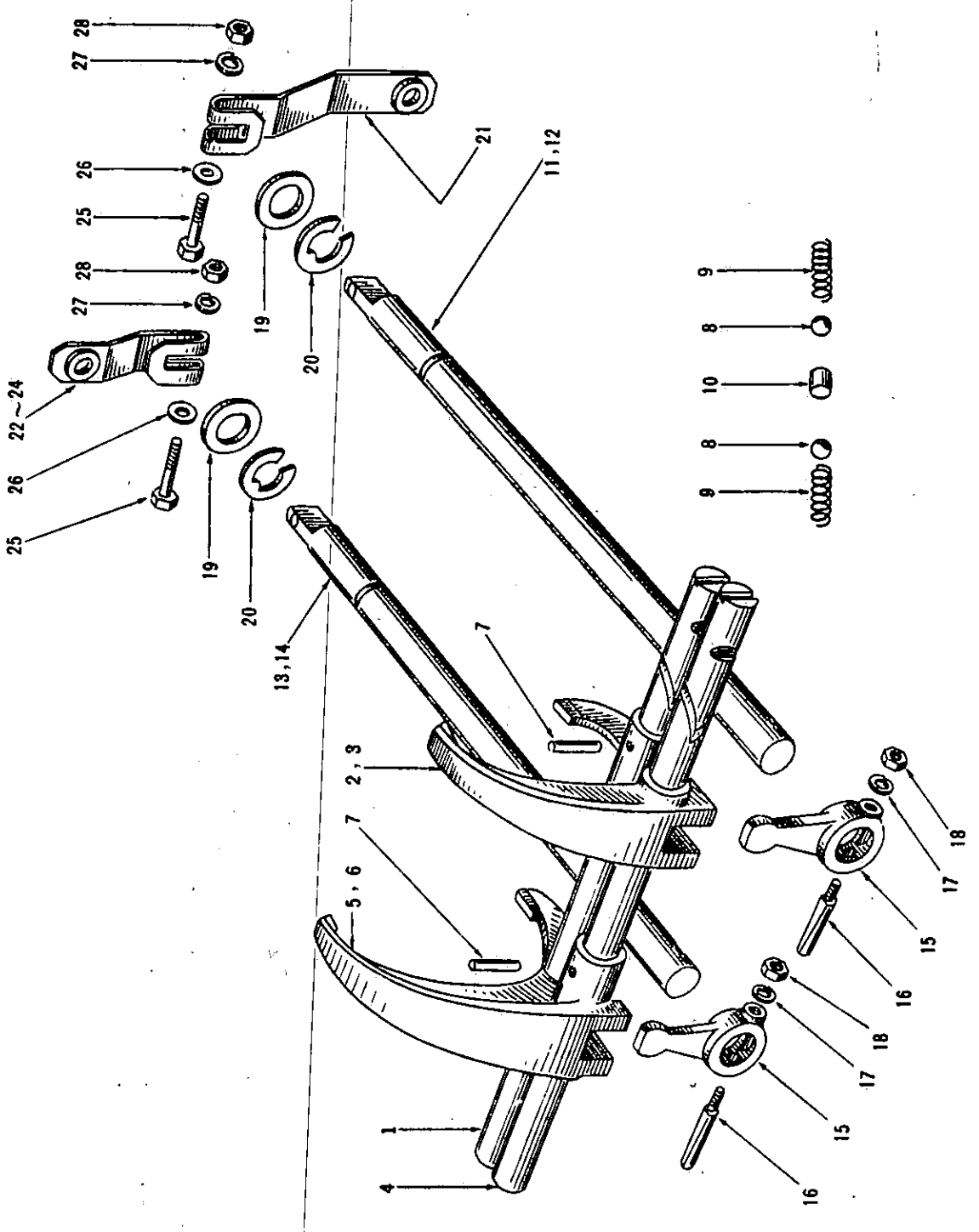

TRANSMISSION FORK & ROD (3-SPEED)

S	KEY NO.	PART NO.	PART NAME	Q'TY	SALES UNIT	MODEL	ICA
	1	32801-10600	ROD-FORK,1ST & REVERSE	1	1	3 SPEED 410	
	2	32805-10600	FORK-1ST & REVERSE	1		3 SPEED 410	
	3	32805-13200	FORK-1ST & REVERSE(FROM SEPT.-64)	1	1	3 SPEED 410	N
	4	32809-10600	ROD-FORK,2ND & 3RD	1	1	3 SPEED 410	
	5	32811-10600	FORK-2ND & 3RD	1		3 SPEED 410	
	6	32811-13200	FORK-2ND & 3RD(FROM SEPT.-64)	1	1	3 SPEED 410	N
	7	32292-36900	PIN-RETAINING,FORK TO ROD	2	10	3 SPEED 410	
	8	32829-26760	BALL-CHECKING	2	10	3 SPEED 410	
	9	32831-00100	SPRING-CHECKING BALL	2		3 SPEED 410	
	10	32815-36900	PLUNGER-INTER LOCK	1	10	3 SPEED 410	
*	11	32911-10601	SHAFT-CROSS,1ST & REVERSE	1	1	R DRIVE 3 SPEED 410	
	12	32911-10801	SHAFT-CROSS,1ST & REVERSE	1	1	L DRIVE 3 SPEED 410	
	13	32881-10601	SHAFT-CROSS,2ND & 3RD	1		R DRIVE 3 SPEED 410	
	14	32881-10801	SHAFT-CROSS,2ND & 3RD	1		L DRIVE 3 SPEED 410	
	15	32912-10600	LEVER-OPERATING	2	1	3 SPEED 410	

Printed in Japan

REVISED: SEPTEMBER,1968

S	KEY NO.	PART NO.	PART NAME	Q'TY	SALES UNIT	MODEL	ICA
	16	32917-36900	PIN-LOCK,OPERATING LEVER TO SHAFT	2	10	3 SPEED 410	
*	17	00915-11400	WASHER-LOCK	2	50	3 SPEED 410	
*	18	00911-14400	NUT	2	100	3 SPEED 410	
*	19	32921-36900	WASHER-THRUST	2	10	3 SPEED 410	
	20	32924-36900	RING-RETAINING,CROSS SHAFT	2	5	3 SPEED 410	
	21	32922-10601	LEVER-CHANGE,1ST & 2ND	1	1	3 SPEED 410	
	22	32923-10601	LEVER-CHANGE,2ND & 3RD	1	1	R DRIVE 3 SPEED 410	
	23	32923-10602	LEVER-CHANGE,2ND & 3RD	1		R DRIVE 3 SPEED 410	Y
	24	32923-10802	LEVER-CHANGE,2ND & 3RD	1	2	L DRIVE 3 SPEED 410	
	25	32952-08000	BOLT TO FIX CHANGE LEVER	2	10	3 SPEED 410	
	26	00915-41510	WASHER-PLAIN TO FIX CHANGE LEVER	4		3 SPEED 410	
	27	00915-11510	WASHER-LOCK TO FIX CHANGE LEVER	2		3 SPEED 410	
	28	00911-24510	NUT TO FIX CHANGE LEVER	2	100	3 SPEED 410	

Printed in Japan

REVISED: SEPTEMBER,1968

NOTE

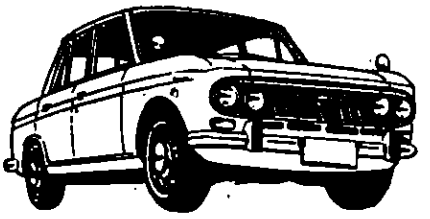

TRANSMISSION FORK & LEVER (4 SPEED)

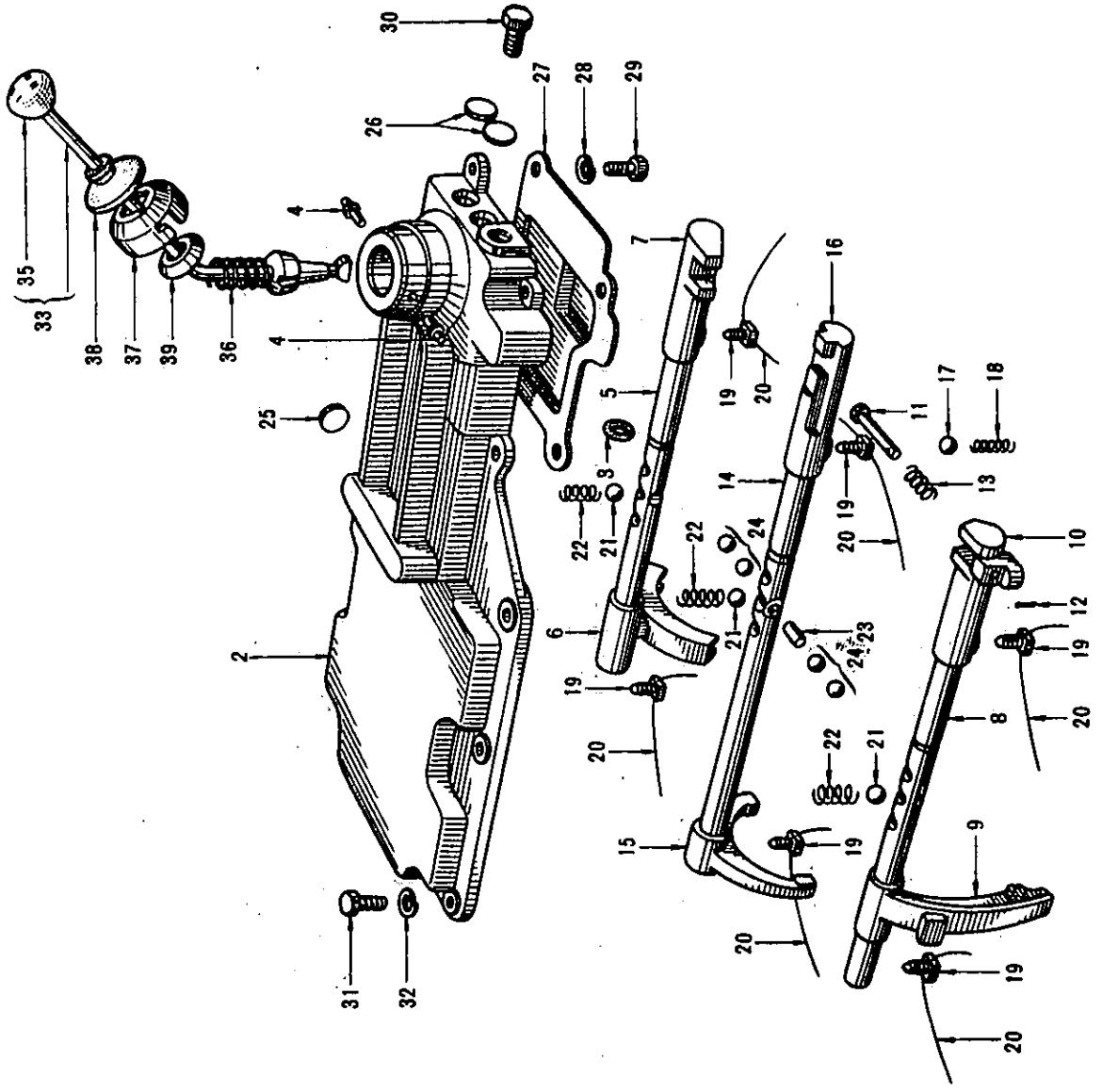

TRANSMISSION FORK & LEVER (4-SPEED)

S	KEY NO.	PART NO.	PART NAME	Q'TY	SALES UNIT	MODEL	ICA
	1	32160-09600	ASSY-COVER,TRANSMISSION	1		4 SPEED,SS 410	
*	2	32162-09600	COVER-TRANSMISSION	1		4 SPEED,SS 410	
	3	32891-09600	RING- O SHIFT ROD	3		4 SPEED,SS 410	
	4	32849-09600	PIN-CONTROL LEVER,PIVOT	2	10	4 SPEED,SS 410	
	5	32801-09600	ROD-FORK,1ST & 2ND SPEED	1	1	4 SPEED,SS 410	
	6	32805-09600	FORK-1ST & 2ND SPEED	1	1	4 SPEED,SS 410	
	7	32892-09600	BRACKET-ROD,1ST & 2ND	1	1	4 SPEED,SS 410	
	8	32816-09600	ROD-FORK,REVERSE	1	1	4 SPEED,SS 410	
	9	32819-09600	FORK-REVERSE	1	1	4 SPEED,SS 410	
	10	32893-09601	BRACKET-ROD,REVERSE	1	1	4 SPEED,SS 410	
	11	32823-09600	PIN-FORK,REVERSE	1	10	4 SPEED,SS 410	
*	12	00921-11800	PIN-COTTER	1	50	4 SPEED,SS 410	
	13	32824-09600	SPRING-PIN,REVERSE FORK	1	5	4 SPEED,SS 410	
	14	32809-09600	ROD-FORK,3RD & 4TH SPEED	1	1	4 SPEED,SS 410	
	15	32811-03200	FORK-3RD & 4TH SPEED	1		4 SPEED,SS 410	

Printed in Japan

REVISED: SEPTEMBER,1968

S	KEY NO.	PART NO.	PART NAME	Q'TY	SALES UNIT	MODEL	ICA
	16	32813-09600	BRACKET-ROD,3RD & 4TH SPEED	1	1	4 SPEED,SS 410	
	17	32827-26760	BALL-CHECKING	1	50	4 SPEED,SS 410	
	18	32825-26761	SPRING-POPPET PIN	1	10	4 SPEED,SS 410	
	19	32803-03200	SCREW-SET	6	10	4 SPEED,SS 410	
	20	32804-85060	WIRE-LOCK	6	1	4 SPEED,SS 410	
	21	32829-26760	BALL-CHECKING	3	10	4 SPEED,SS 410	
	22	32830-03200	SPRING-POPPET,SHIFT ROD	3		4 SPEED,SS 410	
	23	32826-03200	PIN-INTER LOCK	1	10	4 SPEED,SS 410	
	24	32827-26760	BALL-INTER LOCK	4	50	4 SPEED,SS 410	
	25	32167-03200	PLUG-WELCH	1	10	4 SPEED,SS 410	
	26	32168-03200	PLUG-WELCH	2	10	4 SPEED,SS 410	
	27	32895-09600	PLATE-DUST	1	1	4 SPEED,SS 410	
*	28	00915-11400	WASHER-LOCK	4	50	4 SPEED,SS 410	
	29	00111-41010	BOLT	4		4 SPEED,SS 410	
	30	00931-43000	PLUG	1		4 SPEED,SS 410	
	31	32165-09600	BOLT TO FIX TRANSMISSION COVER	6	50	4 SPEED,SS 410	
*	32	00915-11500	WASHER-LOCK TO FIX TRANSMISSION COVER	6	50	4 SPEED,SS 410	

Printed in Japan

REVISED: SEPTEMBER,1968

S	KEY NO.	PART NO.	PART NAME	Q'TY	SALES UNIT	MODEL	ICA
	33	32841-12401	ASSY-LEVER,CONTROL	1		4 SPEED,SS 410	
	34	32869-03200	BOOT-CONTROL LEVER,OUTER	1		4 SPEED,SS 410	
	35	32865-12400	KNOB-CONTROL LEVER	1	2	4 SPEED,SS 410	
•	36	32850-03200	SPRING-LEVER,CONTROL	1	10	4 SPEED,SS 410	
	37	32852-09600	CAP-COVER,TRANSMISSION CASE	1	10	4 SPEED,SS 410	
	38	32853-03200	BOOT-RUBBER	1	5	4 SPEED,SS 410	
	39	32851-09600	SEAT-LEVER SPRING	1	10	4 SPEED,SS 410	
	40	32857-03200	SCREW-STOP,REVERSE FORK	1	10	4 SPEED,SS 410	
	41	00911-31510	NUT-PLAIN	1		4 SPEED,SS 410	

Printed in Japan

REVISED: SEPTEMBER,1968

NOTE

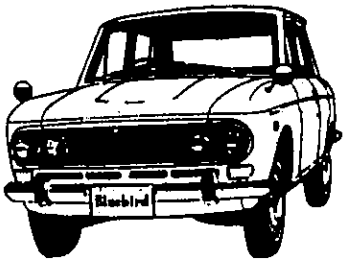

NOTE

PROPELLER SHAFT

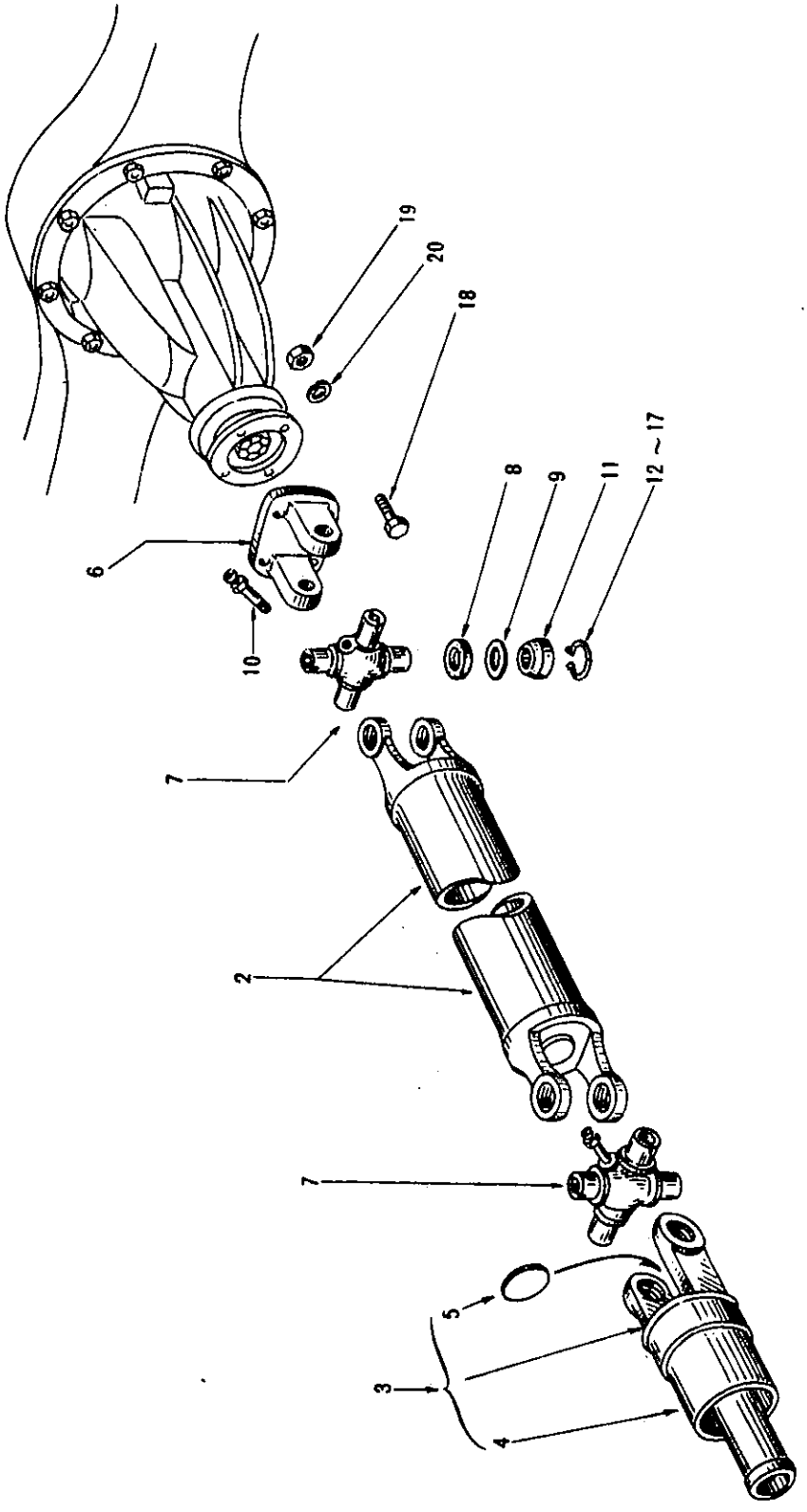

S	KEY NO.	PART NO.	PART NAME	Q'TY	SALES UNIT	MODEL	ICA
			PROPELLER SHAFT				
*	1	37000-11600	COMP.-SHAFT,PROPELLER, WITH JOINT	1		410	
	2	37210-10600	ASSY-SHAFT,PROPELLER	1		410	
	3	37111-08000	ASSY-YOKE,SLEEVE	1		410	
	4	37219-26760	COVER-DUST	1		410	
	5	37113-26760	PLUG-SLEEVE YOKE	1		410	
	6	37117-11960	YOKE-FLANGE	1		410	
	7	37126-11960	JOURNAL	2		410	
	8	37133-11960	RETAINER-BEARING,OIL SEAL	8	50	410	
	9	37134-11960	SEAL-OIL	8		410	
*	10	37138-36800	NIPPLE-GREASE	2	50	410	
	11	37130-11960	ASSY-BEARING	8		410	
	12	37148-08000	RING-SNAP(1.54T)	8		410	
	13	37149-08000	RING-SNAP(1.51T)	8		410	
	14	37150-08000	RING-SNAP(1.48T)	8		410	
	15	37151-08000	RING-SNAP(1.45T)	8		410	
	16	37152-08000	RING-SNAP(1.57T)	8		410	
	17	37153-08000	RING-SNAP(1.60T)	8		410	
	18	00124-52210	BOLT FLANGE YOKE TO COMPANION FLANGE	4	50	410	
	19	00911-24510	NUT FLANGE YOKE TO COMPANION FLANGE	4	100	410	
	20	00915-21510	WASHER-LOCK FLANGE YOKE TO COMPANION FLANGE	4		410	

Printed in Japan

REVISED: SEPTEMBER,1968

S	KEY NO.	PART NO.	PART NAME	Q'TY	SALES UNIT	MODEL	ICA
	21	37125-11975	KIT-REPAIR,JOURNAL CEN TER(CONTAINS FOLLOWING PART,KEY NO.6-11)	1		410	

Printed in Japan

REVISED: SEPTEMBER,1968

NOTE

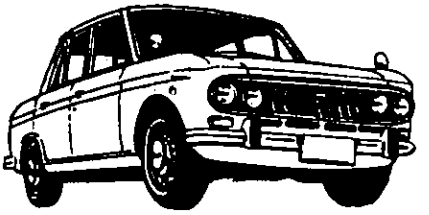

GEAR CARRIER

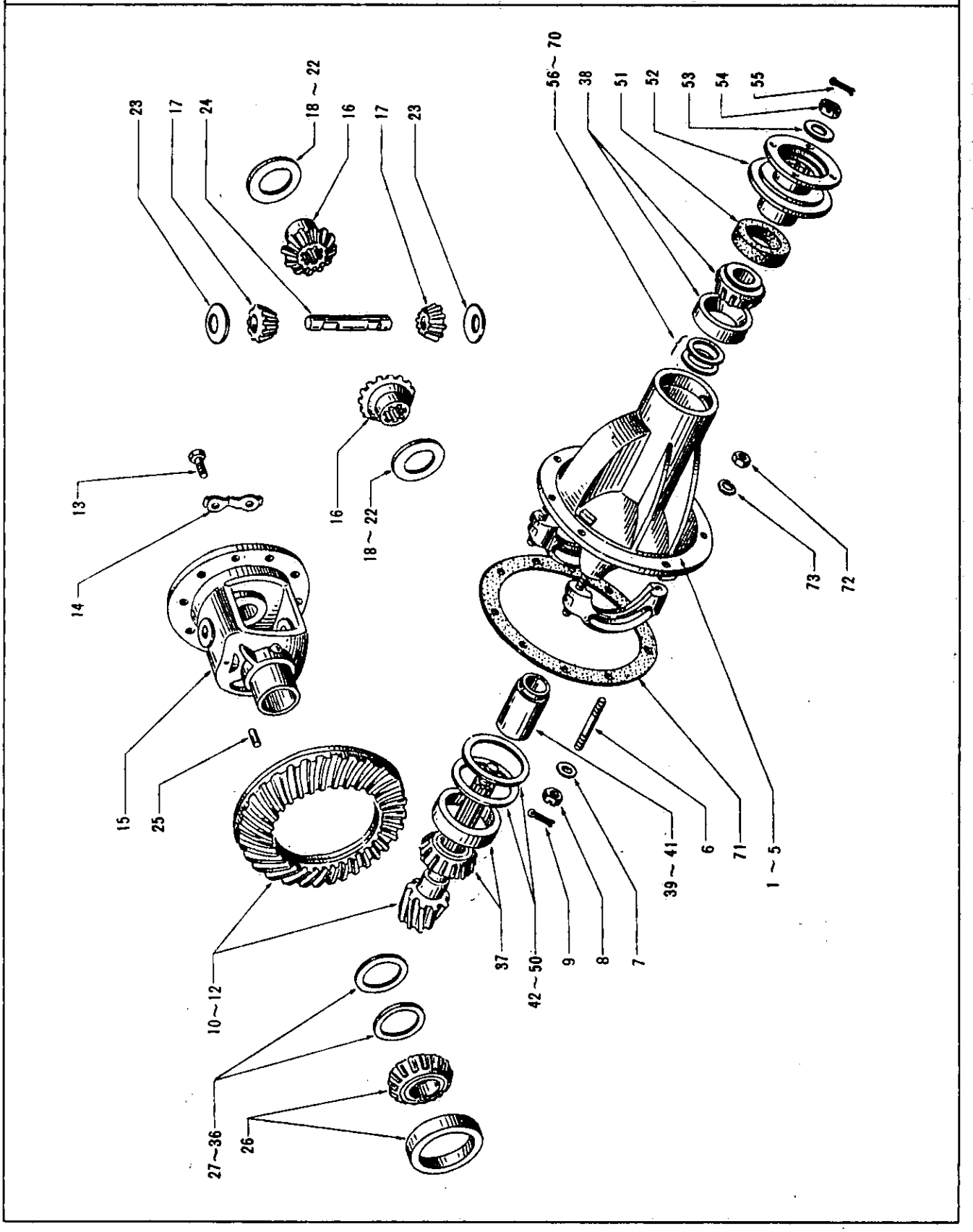

S	KEY NO.	PART NO.	PART NAME	Q'TY	SALES UNIT	MODEL	ICA
			GEAR CARRIER				
	1	38300-10600	ASSY-CARRIER,WITH GEAR (37T:8T)	1		L DRIVE 410	
	2	38300-11600	ASSY-CARRIER,WITH GEAR (35T:8T)	1		U.LU.UN.LU N.WU:WLU.W UN.WLUN.SS 410	
	3	38300-12400	ASSY-CARRIER,WITH GEAR (37T:9T)	1	1	4 SPEED,SS 410	
	4	38310-04100	ASSY-CARRIER,GEAR	1	1	3 SPEED,SS 410	
	5	38310-10400	ASSY-CARRIER,GEAR	1	1	4 SPEED 410,(OP) SS 410	
	6	38315-04100	STUD-DIFFERENTIAL BEARING CUP	4	10	410	
	7	00915-41610	WASHER-PLAIN TO STUD	4		410	
	8	00911-84600	NUT TO STUD	4		410	
	9	00921-21810	PIN-COTTER TO STUD	4		410	
	10	38100-04101	SET-GEAR,HYPOID(37T:8T)	1		L.410	
	11	38100-08300	SET-GEAR,HYPOID(35T:8T)	1	1	U.LU.UN.LU N.WU:WLU.W UL.WLUN.& 4 SPEED,SS 410	
	12	38100-09600	SET-GEAR,HYPOID(37T:9T)	1	1	(OP) 4 SPEED 410, SS 410	
	13	38102-04100	BOLT-DRIVE GEAR	8	1	410	
	14	38103-04100	STRAP-BOLT LOCK	4	10	410	
	15	38421-04105	CASE-DIFFERENTIAL GEAR	1	1	410	

Printed in Japan

REVISED: SEPTEMBER,1968

S	KEY NO.	PART NO.	PART NAME	Q'TY	SALES UNIT	MODEL	ICA
	16	38423-10600	GEAR-SIDE,DIFFERENTIAL	2	1	410	
	17	38425-04100	MATE-PINION,DIFFERENTIAL	2		410	
	18	38424-04101	WASHER-THRUST,SIDE GEAR(0.785T)	2	10	410	
	19	38424-08000	WASHER-THRUST,SIDE GEAR(0.835T)	2	10	410	
	20	38424-08001	WASHER-THRUST,SIDE GEAR(0.885T)	2	10	410	
	21	38424-08002	WASHER-THRUST,SIDE GEAR(1.035T)	2	10	410	
	22	38424-08003	WASHER-THRUST,SIDE GEAR(1.185T)	2	10	410	
	23	38426-04100	WASHER-THRUST,PINION MATE	2	5	410	
	24	38427-04100	SHAFT-PINION MATE	1	2	410	
	25	38428-25660	PIN-LOCK,PINION MATE SHAFT	1		410	
	26	38440-04100	ASSY-BEARING,DIFFERENTIAL SIDE	2	1	410	
	27	38153-04100	SHIM-ADJUSTING,DRIVE GEAR(0.7T)	AR		410	
*	28	38453-10600	SHIM-ADJUSTING,DRIVE GEAR(0.05T)	AR		410	Y
	29	38154-04100	SHIM-ADJUSTING,DRIVE GEAR(0.25T)	AR		410	
*	30	38454-10600	SHIM-ADJUSTING,DRIVE GEAR(0.075T)	AR		410	Y
	31	38155-04100	SHIM-ADJUSTING,DRIVE GEAR(0.125T)	AR		410	
*	32	38455-10600	SHIM-ADJUSTING,DRIVE GEAR(0.125T)	AR		410	Y
	33	38156-04100	SHIM-ADJUSTING,DRIVE GEAR(0.075T)	AR		410	

Printed in Japan

REVISED: SEPTEMBER,1968

S	KEY NO.	PART NO.	PART NAME	Q'TY	SALES UNIT	MODEL	ICA
	34	38156-04100	SHIM-ADJUSTING,DRIVE GEAR(0.025T)	AR		410	Y
	35	38161-04100	SHIM-ADJUSTING,DRIVE GEAR(0.05T)	AR		410	
	36	38161-04100	SHIM-ADJUSTING,DRIVE GEAR(0.5T)	AR		410	Y
	37	38120-04100	BEARING-REAR,PINION	1	1	410	
	38	38140-04100	BEARING-FRONT,PINION	1	10	410	
	39	38165-09401	SPACER-DRIVE PINION BEARING(59.25T)	1	10	410	
	40	38166-09401	SPACER-DRIVE PINION BEARING(59.50T)	1	10	410	
	41	38167-09400	SPACER-DRIVE PINION BEARING(59.75T)	1	1	410	
	42	38153-25660	SHIM-ADJUSTING,DRIVE PINION(0.75T)	AR	50	410	
*	43	38153-10601	SHIM-ADJUSTING,DRIVE PINION(0.05T)	AR	10	410	Y
	44	38154-25660	SHIM-ADJUSTING,DRIVE PINION(0.25T)	AR	50	410	
*	45	38154-10601	SHIM-ADJUSTING,DRIVE PINION(0.075T)	AR	10	410	Y
	46	38155-25660	SHIM-ADJUSTING,DRIVE PINION(0.125T)	AR	50	410	
*	47	38155-10601	SHIM-ADJUSTING,DRIVE PINION(0.125T)	AR	10	410	Y
	48	38156-25660	SHIM-ADJUSTING,DRIVE PINION(0.075T)	AR	50	410	
*	49	38156-10601	SHIM-ADJUSTING,DRIVE PINION(0.25T)	AR	10	410	Y
	50	38157-10601	SHIM-ADJUSTING,DRIVE PINION(0.5T)	AR		410	
	51	38189-02700	SEAL-OIL	1	10	410	
	52	38210-09400	ASSY-FLANGE,COMPANION	1	1	410	

Printed in Japan

REVISED: SEPTEMBER,1968

S	KEY NO.	PART NO.	PART NAME	Q'TY	SALES UNIT	MODEL	ICA
	53	38215-01300	WASHER-PLAIN TO HYPOID DRIVE PINION	1	10	410	
	54	38216-01300	NUT TO HYPOID DRIVE PINION	1	10	410	
*	55	00921-43000	PIN-COTTER TO HYPOID DRIVE PINION	1	50	410	
	56	38127-09400	WASHER-ADJUSTING,DRIVE PINION BEARING(2.7T)	1	10	410	
	57	38128-09400	WASHER-ADJUSTING,DRIVE PINION BEARING(2.57T)	1	10	410	
	58	38129-09400	WASHER-ADJUSTING,DRIVE PINION BEARING(2.55T)	1	10	410	
	59	38130-09400	WASHER-ADJUSTING,DRIVE PINION BEARING(2.53T)	1	10	410	
	60	38131-09400	WASHER-ADJUSTING,DRIVE PINION BEARING(2.51T)	1	10	410	
	61	38132-09400	WASHER-ADJUSTING,DRIVE PINION BEARING(2.49T)	1	10	410	
	62	38133-09400	WASHER-ADJUSTING,DRIVE PINION BEARING(2.47T)	1	10	410	
	63	38134-09400	WASHER-ADJUSTING,DRIVE PINION BEARING(2.45T)	1	10	410	
	64	38135-09400	WASHER-ADJUSTING,DRIVE PINION BEARING(2.43T)	1	10	410	
	65	38136-09400	WASHER-ADJUSTING,DRIVE PINION BEARING(2.41T)	1	10	410	
	66	38137-09400	WASHER-ADJUSTING,DRIVE PINION BEARING(2.39T)	1	10	410	
	67	38128-09400	WASHER-ADJUSTING,DRIVE PINION BEARING(2.37T)	1	10	410	
	68	38139-09400	WASHER-ADJUSTING,DRIVE PINION BEARING(2.35T)	1	10	410	
	69	38140-09400	WASHER-ADJUSTING,DRIVE PINION BEARING(2.33T)	1	1	410	

Printed in Japan

REVISED: SEPTEMBER,1968

S	KEY NO.	PART NO.	PART NAME	Q'TY	SALES UNIT	MODEL	ICA
	70	38141-09400	WASHER-ADJUSTING,DRIVE PINION BEARING(2.31T)	1		410	
*	71	38320-04100	GASKET-GEAR CARRIER	1		410	
	72	00911-14510	NUT TO GEAR CARRIER STUD	8		410	
	73	00915-11510	WASHER-LOCK TO GEAR CARRIER STUD	8		410	

REVISED: SEPTEMBER,1968

Printed in Japan

NOTE

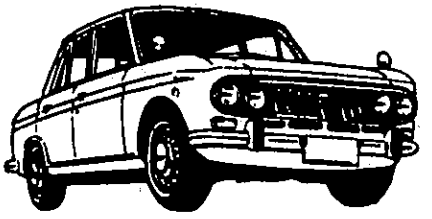

NOTE

REMOTE CONTROL LEVER

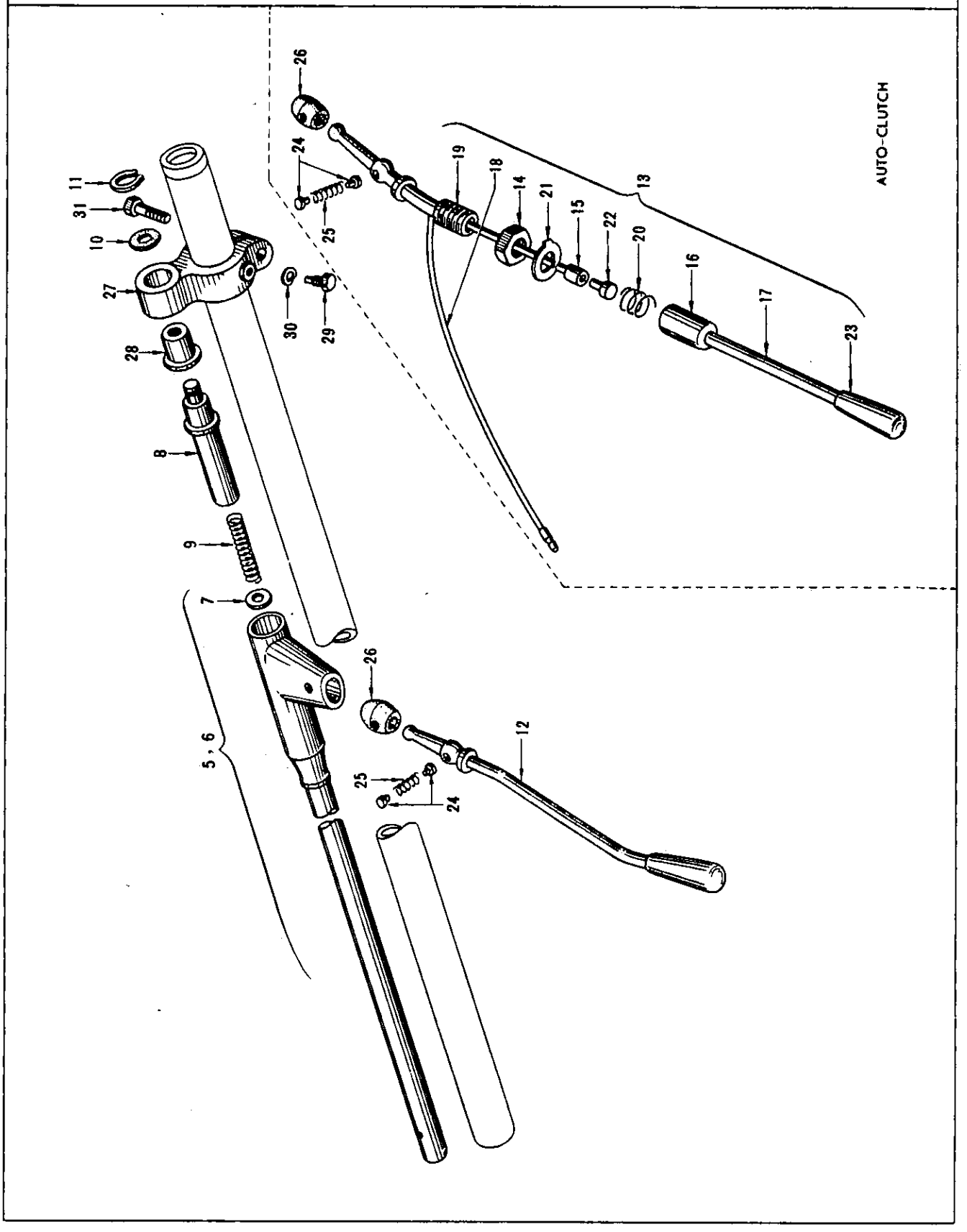

S	KEY NO.	PART NO.	PART NAME	Q'TY	SALES UNIT	MODEL	ICA
			REMOTE CONTROL LEVER				
	1	34102-10651	ASSY-LEVER & ROD,CONTROL	1		P CLUTCH R DRIVE 410	
	2	34102-10851	ASSY-LEVER & ROD,CONTROL	1	1	P CLUTCH R DRIVE 410	
	3	34102-11751	ASSY-LEVER & ROD,CONTROL	1		A CLUTCH R DRIVE 410	
	4	34102-12101	ASSY-LEVER & ROD,CONTROL	1		A CLUTCH L DRIVE 410	
	5	34103-10600	ASSY-ROD,CONTROL	1	1	R DRIVE 410	
	6	34103-10800	ASSY-ROD,CONTROL	1	1	L DRIVE 410	
	7	34117-04100	SEAT-RETURN SPRING	1	10	410	
	8	34113-10600	INSERT-CONTROL ROD	1	1	410	
	9	34116-09400	SPRING-RETURN,CONTROL ROD	1	5	410	
	10	34135-10600	WASHER-INSERT,CONTROL ROD	1	10	410	
	11	34134-04100	WASHER-C	1	10	410	
	12	34110-10600	ASSY-LEVER,HAND	1	1	P CLUTCH 410	
	13	34310-11701	ASSY-LEVER,HAND	1		A CLUTCH 410	
	14	34317-09520	SCREW-ADJUSTING,CONTROL LEVER	1	50	A CLUTCH 410	
	15	34318-09520	INSULATOR-LEVER	1		A CLUTCH 410	
	16	34331-09520	HOUSING-LEVER	1	1	A CLUTCH 410	

Printed in Japan

REVISED: SEPTEMBER,1968

S	KEY NO.	PART NO.	PART NAME	Q'TY	SALES UNIT	MODEL	ICA
	17	34332-11700	ROD-CONTROL	1	5	A CLUTCH 4 10	
	18	34312-09520	WIRE-ELECTRIC	1		A CLUTCH 4 10	
	19	34314-11700	BRACKET-CONTROL LEVER	1	5	A CLUTCH 4 10	
	20	34333-09520	SPRING-SWITCH	1		A CLUTCH 4 10	
•	21	34334-09520	WASHER-LOCK	1	50	A CLUTCH 4 10	
	22	34335-09520	POINT-CONTROL	1		A CLUTCH 4 10	
	23	34119-04101	KNOB-CONTROL LEVER	1	1	A CLUTCH 4 10	
	24	34124-10600	PIN-PIVOT,CONTROL LEVE R	2	50	410	
	25	34125-10600	SPRING-PIVOT,CONTROL L EVER	1	50	410	
	26	34115-10600	INSULATOR-CONTROL LEVE R	1	50	410	
	27	34104-09400	BRACKET-SUPPORT,UPPER	1	1	410	
	28	34105-04100	BUSHING-SUPPORT,UPPER BRACKET	1	10	410	
	29	34129-04100	BOLT-LOCATION,UPPER SU PPORT BRACKET	1	10	410	
	30	00915-11410	WASHER-LOCK	1		410	
	31	34128-30100	SCREW-BRACKET,UPPER SU PPORT	1	10	410	

Printed in Japan

REVISED: SEPTEMBER,1968

NOTE

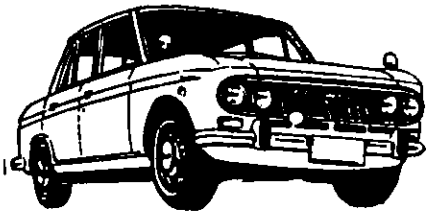

REMOTE CONTROL LINKAGE (R DRIVE)

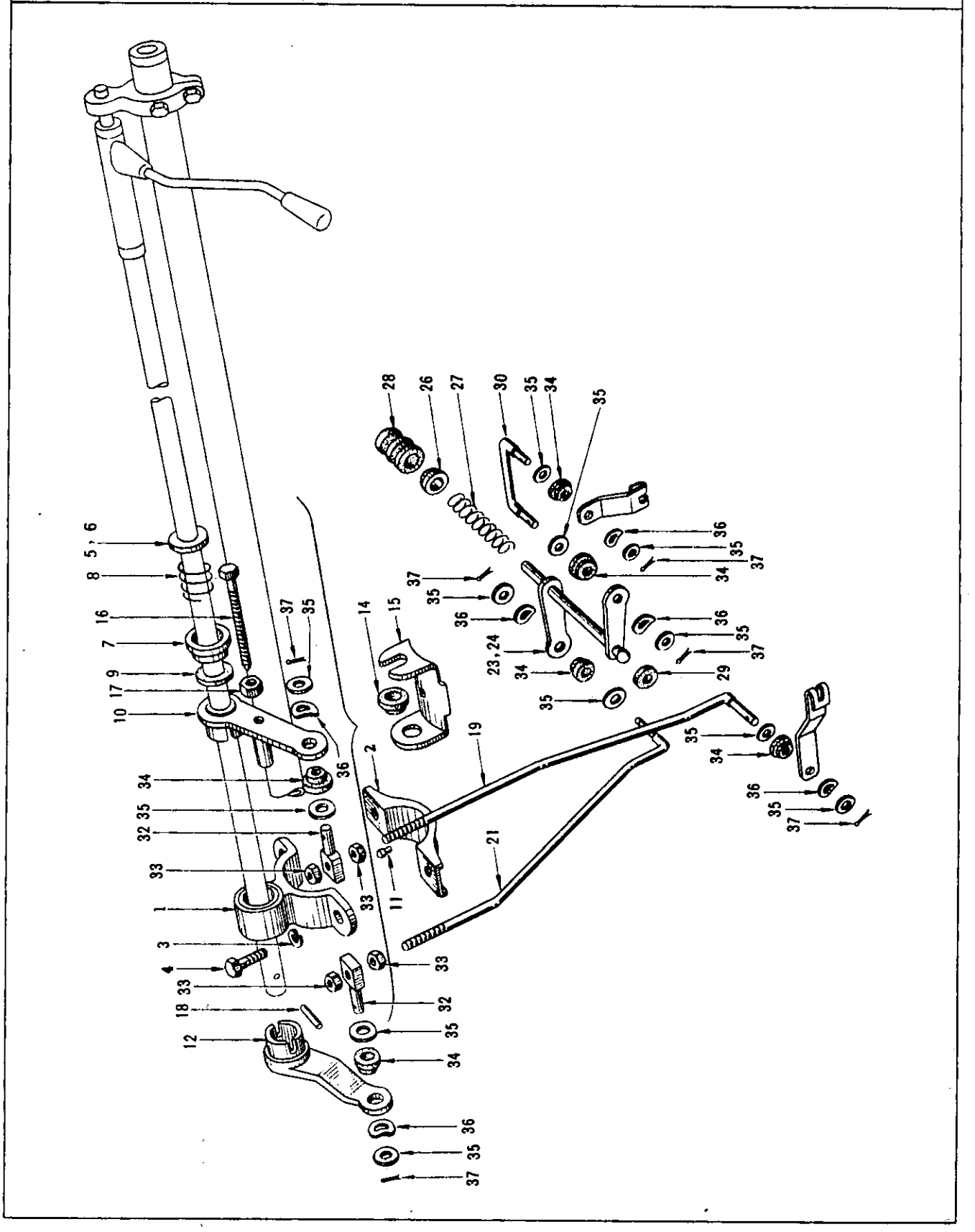

SEPTEMBER, 1968 Printed in Japan

REMOTE CONTROL LINKAGE (L DRIVE)

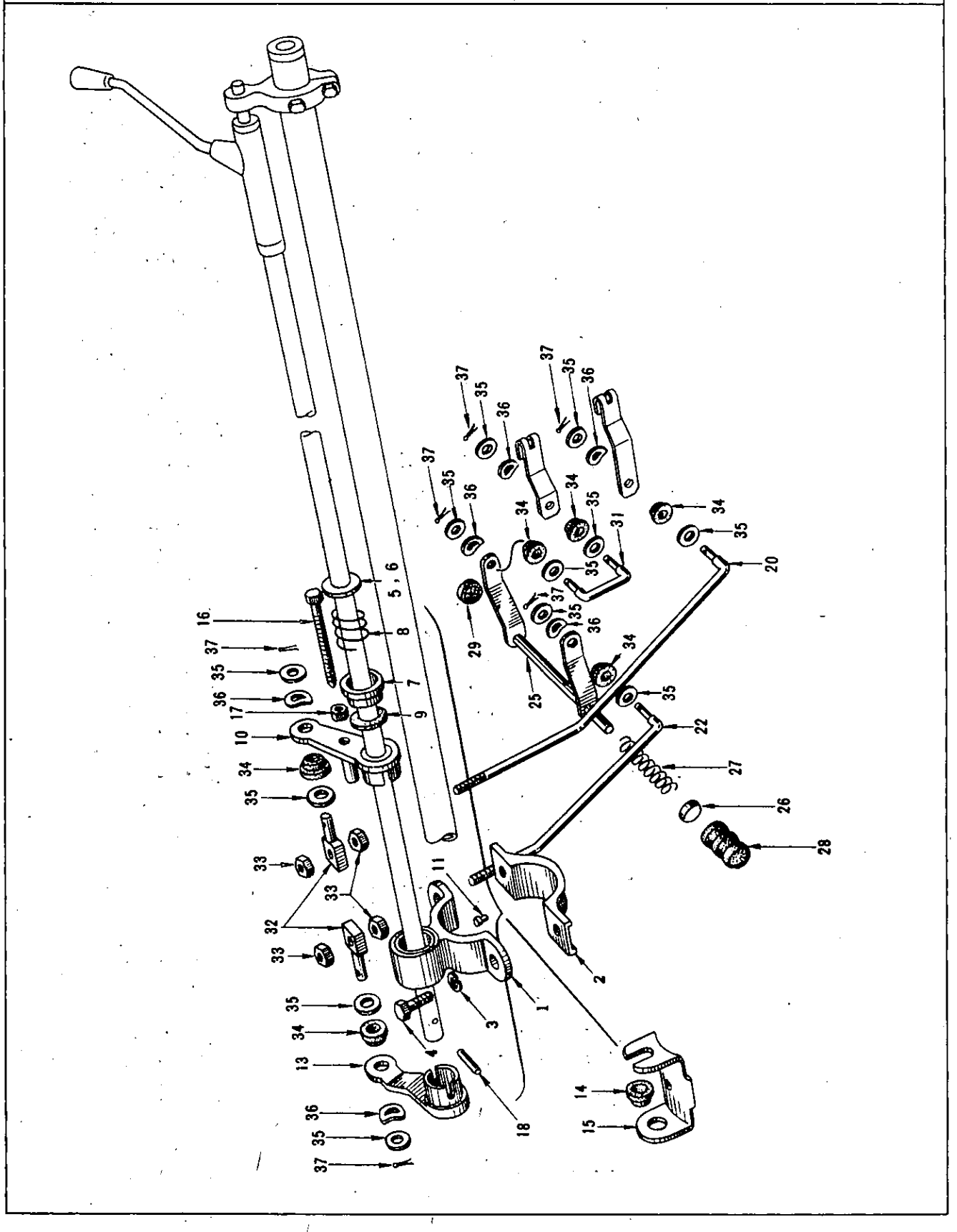

S	KEY NO.	PART NO.	PART NAME	Q'TY	SALES UNIT	MODEL	ICA
			REMOTE CONTROL LINKAGE				
	1	34400-10600	ASSY-BRACKET,SUPPORT,LOWER	1	1	410	
	2	34405-61000	CLAMP-LOWER SUPPORT BRACKET	1	1	410	
	3	00915-11410	WASHER-LOCK TO FIX LOWER BRACKET	2		410	
	4	3440 -10600	BOLT-TO FIX LOWER BRACKET	2		410	
	5	34496-61000	WASHER-PLAIN(1.6T)USE,FIT ONE	1	50	410	
	6	34496-61001	WASHEP-PLAIN(2.0T)USE,FIT ONE	1		410	
	7	34494-36900	CAP-SPRING,CHANGE SPEED LEVER	1	5	410	
	8	34497-61000	SPRING-CHANGE SPEED LEVER	1		410	
	9	34496-36900	WASHER-PLAIN	1	5	410	
	10	34431-10601	ASSY-LEVER,1ST & REVERSE CHANGE SPEED(UPPER)	1	1	410	
	11	34406-61000	PEG-LOCATION	1	1	410	
	12	34408-10601	ASSY-LEVER,2ND & 3RD CHANGE SPEED	1		R DRIVE 410	
*	13	34408-10600	ASSY-LEVER,2ND & 3RD CHANGE SPEED	1	1	L DRIVE 410	
	14	34491-61000	SEAT-CHANGE SPEED LEVER UPPER	1	5	410	
	15	34492-10600	RETAINER-CHANGE SPEED LEVER	1	1	410	
	16	34439-10600	SCREW-NEUTRAL SETTING	1	10	410	
	17	00911-31410	NUT	1	50	410	

Printed in Japan

REVISED: SEPTEMBER,1968

S	KEY NO.	PART NO.	PART NAME	Q'TY	SALES UNIT	MODEL	ICA
	18	34126-61000	PIN-CONTROL ROD	1	10	410	
*	19	34413-10601	ROD-SHIFT,1ST & REVERSE GEAR	1	1	R DRIVE 410	
	20	34413-10801	ROD-SHIFT,1ST & REVERSE GEAR	1	1	L DRIVE 410	
*	21	34450-10601	ROD-SHIFT,2ND & 3RD GEAR,UPPER	1	1	R DRIVE 410	
*	22	34450-10801	ROD-SHIFT,2ND & 3RD GEAR,UPPER	1	1	L DRIVE 410	
*	23	34453-10600	ASSY-SHAFT,CROSS,CHANGE SPEED CONTROL	1	1	R DRIVE 410	
*	24	34453-10600	ASSY-SHAFT,CROSS,CHANGE SPEED CONTROL	1	1	R DRIVE 410	Y
*	25	34453-10802	ASSY-SHAFT,CROSS,CHANGE SPEED CONTROL	1		L DRIVE 410	
	26	34462-61000	BUSHING-SPHERICAL,CROSS SHAFT	1	2	410	
	27	34463-10600	SPRING-RETAINING,CROSS SHAFT	1	10	410	
*	28	34467-10600	BOOT-CROSS SHAFT,OUTER	1		410	
	29	34466-10600	BOOT-CROSS SHAFT,INNER	1		410	
*	30	34438-10601	ROD-SHIFT,2ND & 3RD,LOWER	1	1	R DRIVE 410	
*	31	34438-10802	ROD-SHIFT,2ND & 3RD,LOWER	1	2	L DRIVE 410	
	32	34410-04100	TRUNION-GEAR SHIFT ROD	2		410	
	33	00911-14610	NUT	4		410	
*	34	34402-04100	INSULATOR-GEAR SHIFT ROD	6	10	410	
	35	34414-04100	WASHER-PLAIN	12	50	410	
	36	34419-04100	WASHER-SPECIAL	6	10	410	
	37	00921-21810	PIN-COTTER	6		410	

Printed in Japan

REVISED: SEPTEMBER,1968

NOTE

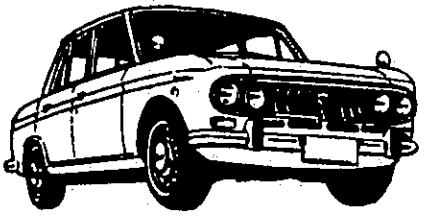

NOTE

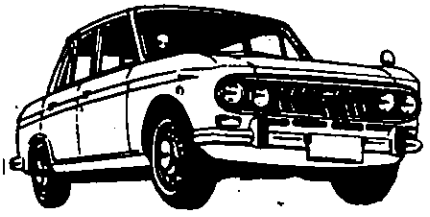

BRAKE PEDAL & MASTER CYLINDER

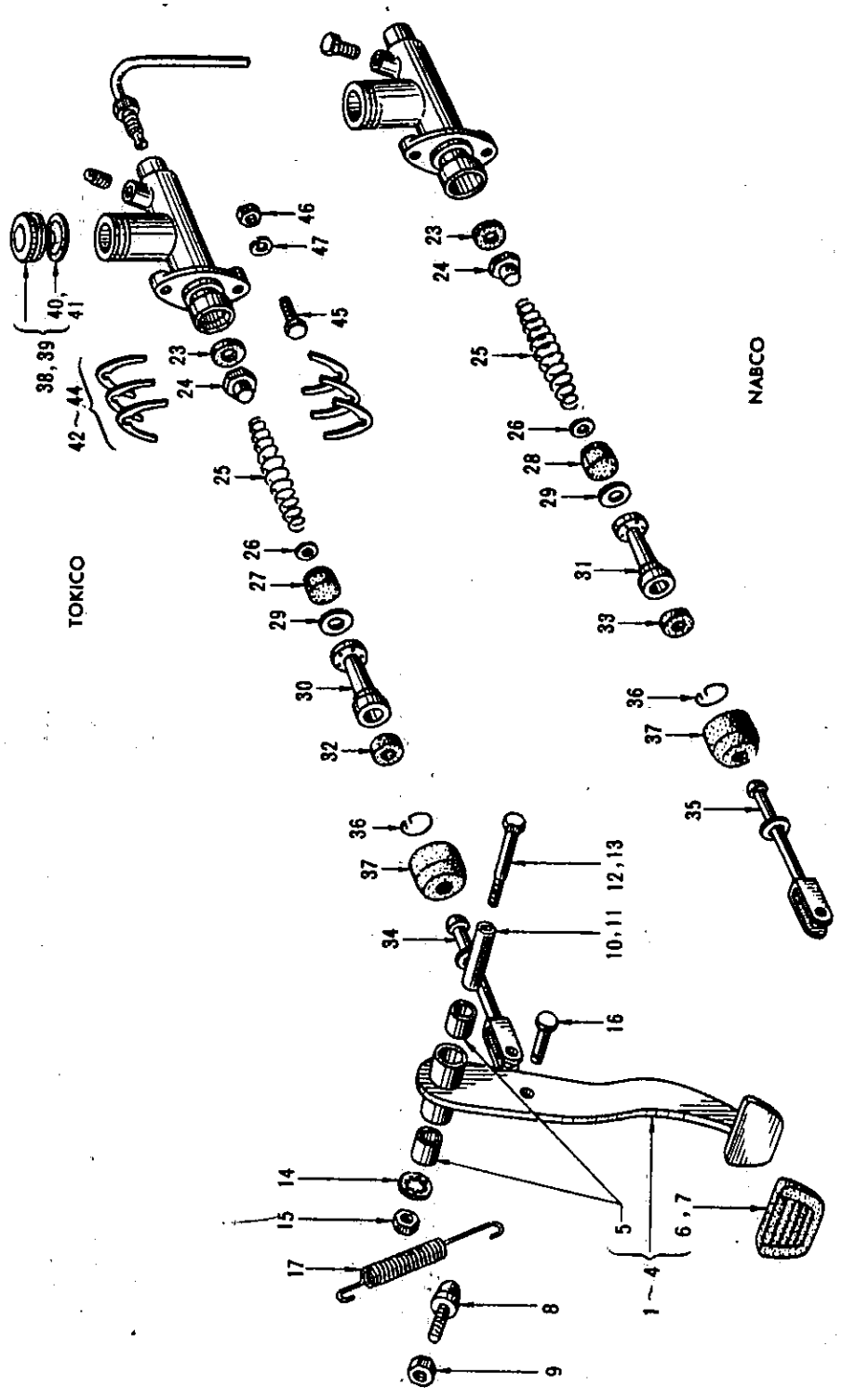

BRAKE PEDAL & MASTER CYLINDER

S	KEY NO.	PART NO.	PART NAME	Q'TY	SALES UNIT	MODEL	ICA
*	1	46520-10652	ASSY-PEDAL,BRAKE	1		R DRIVE P CLUTCH 410	
*	2	46520-10850	ASSY-PEDAL,BRAKE	1		L DRIVE P CLUTCH 410	
	3	46520-11750	ASSY-PEDAL,BRAKE	1	1	R DRIVE A CLUTCH 410	
	4	46520-12150	ASSY-PEDAL,BRAKE	1		L DRIVE A CLUTCH 410	
	5	46425-30000	BUSHING-PEDAL,FULCRUM	2	10	410	
	6	46531-10601	COVER-PEDAL	1	5	P CLUTCH 410	
	7	46531-11700	COVER-PEDAL	1	1	A CLUTCH 410	
	8	46510-08700	STOPPER-BRAKE PEDAL	1	5	A CLUTCH 410	
	9	00911-34510	NUT	1	50	A CLUTCH 410	
	10	46482-30000	SLEEVE-PEDAL SHAFT	1		410	
	11	46483-10800	SPACER-PEDAL SHAFT	1	10	L DRIVE 410	
	12	46460-04100	PIN-FULCRUM	1	10	R DRIVE 410	
	13	46460-32200	PIN-FULCRUM	1	1	L DRIVE 410	
*	14	00916-11800	WASHER	1	50	410	
	15	00911-34810	NUT	1		R DRIVE 410	
*	16	46123-08700	PIN-CLEVIS,BRAKE MASTER CYLINDER	1	10	410	

Printed in Japan

REVISED: SEPTEMBER,1968

S	KEY NO.	PART NO.	PART NAME	Q'TY	SALES UNIT	MODEL	ICA
	17	46485-32200	SPRING-RETURN,BRAKE PE D AL	1	10	410	
	18	46462-34500	SPACER-BRAKE PEDAL	1		A CLUTCH L DRIVE 410	
	19	46010-10600	ASSY-CYLINDER,BRAKE MA STER	1		410	
	20	46010-10601	ASSY-CYLINDER,BRAKE MA STER(JUNE-64)	1	1	R DRIVE 41 0	
	21	46010-10600	ASSY-CYLINDER,BRAKE MA STER	1		410	
	22	46010-10800	ASSY-CYLINDER,BRAKE MA STER(JUNE-64)	1	1	L DRIVE 41 0	
	23	46057-27260	SEAT-VALVE	1	20	410	
	24	46050-27260	ASSY-VALVE	1	10	410	
	25	46061-27260	SPRING-VALVE	1	10	410	
	26	46062-27260	SEAT-SPRING	1	10	410	
○	27	46064-27260	CUP-PISTON,PRIMARY(TOK ICO)	1	10	410	
	28	46064-27261	CUP-PISTON,PRIMARY(NAB CO)	1		410	
	29	46055-27260	SPACER-PISTON CUP	1		410	
	30	46063-27260	PISTON-BRAKE MASTER(TO KICO)	1		410	
	31	46063-10600	PISTON-BRAKE MASTER(NA BCO)	1	5	410	
○	32	46068-27260	CUP-PISTON,SECONDARY(T OKICO)	1	10	410	
	33	46068-27261	CUP-PISTON,SECONDARY(N ABCO)	1	10	410	
	34	46080-10610	ASSY-ROD,PUSH(TOKICO)	1		410	
	35	46080-10600	ASSY-ROD,PUSH(NABCO)	1	1	410	
	36	46071-27260	RING-SNAP	1	10	410	

REVISED:-SEPTEMBER,1968

Printed in Japan

S	KEY NO.	PART NO.	PART NAME	Q'TY	SALES UNIT	MODEL	ICA
	37	46100-27260	COVER-DUST	1		410	
	38	46020-10610	SET-CAP,FILLER(TOKICO)	1	5	410	
	39	46020-10600	SET-CAP,FILLER(NABCO)	1	5	410	
	40	46034-01300	GASKET-FILLER CAP(TOKI CO)	1	10	410	
	41	46034-02700	GASKET-FILLER CAP(NABC O)	1	10	410	
	42	46117-27260	SHIM(1.6T) FOR BRAKE P EDAL ADJUSTMENT	AR	10	410	
	43	46118-27260	SHIM(0.8T) FOR BRAKE P EDAL ADJUSTMENT	AR	10	410	
	44	46119-27260	SHIM(0.5T) FOR BRAKE P EDAL ADJUSTMENT	AR	1	410	
	45	30614-01300	BOLT TO FIX MASTER CYL INDER	2	10	410	
	46	00911-14510	NUT TO FIX MASTER CYLI NDER	2		410	
	47	00915-21510	WASHER-LOCK TO FIX MAS TER CYLINDER	2		410	

Printed in Japan

REVISED: SEPTEMBER,1968

NOTE

NOTE

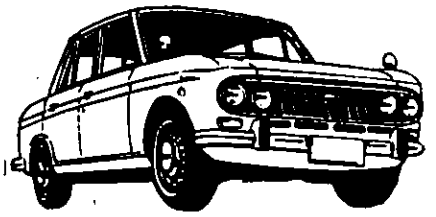

FRONT BRAKE

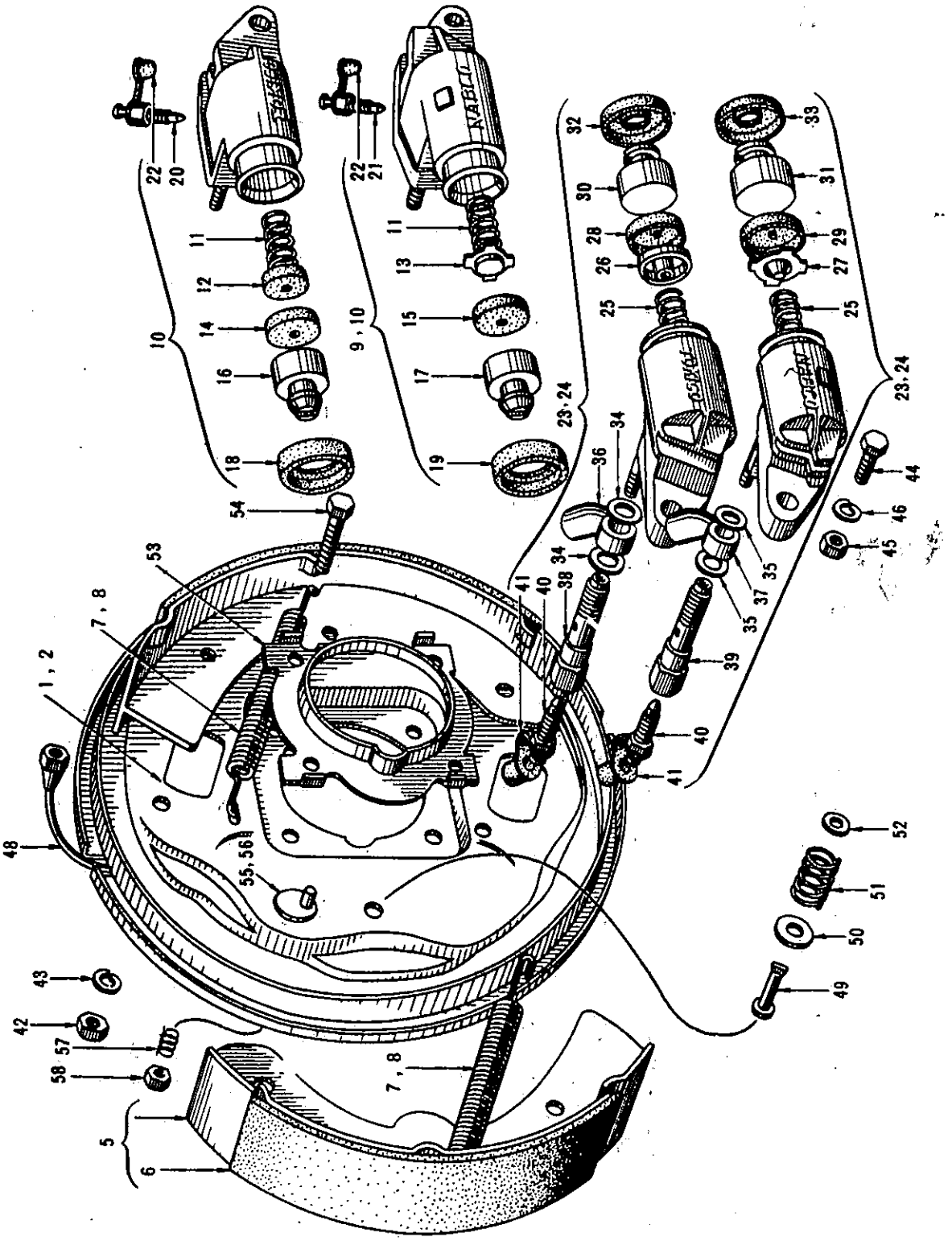
1, 2
5
6
7, 8
9, 10
10
11
12
13
14
15
16
17
18
19
20
21
22
23, 24
25
26
27
28
29
30
31
32
33
34
35
36
37
38
39
40
41
42
43
44
45
46
48
49
50
51
52
53
54
55, 56
57
58

S	KEY NO.	PART NO.	PART NAME	QTY	SALES UNIT	MODEL	ICA
			FRONT BRAKE				
*	1	41000-10600	ASSY-BRAKE,FRONT(R.H.)	1	1	410	
*	2	41010-10600	ASSY-BRAKE,FRONT(L.H.)	1		410	
*	3	41020-10600	ASSY-DISC,FRONT BRAKE(R.H.)	1	1	410	
*	4	41030-10600	ASSY-DISC,FRONT BRAKE(L.H.)	1	1	410	
*	5	41060-10500	ASSY-SHOW,FRONT BRAKE	4		410	
	6	41066-10500	LINING-BRAKE	4	1	410	
*	7	41090-10601	SPRING-RETURN,FRONT BR AKE SHOE	4	5	410	
	8	41090-10602	SPRING-RETURN,FRONT BR AKE SHOE	4	5	410	Y
*	9	41100-10600	ASSY-CYLINDER,FRONT WH EEL,FORE(R.H.)	1	1	410	
*	10	41102-10600	ASSY-CYLINDER,FRONT WH EEL,FORE(L.H.)	1	1	410	
*	11	41125-30001	SPRING-PISTON	2	10	410	
*	12	41116-10610	SEAT-SPRING,(TOKICO)	2	10	410	
*	13	41116-10500	SEAT-SPRING,(NABCO)	2	5	410	
*	14	44112-12060	CUP-PISTON(TOKICO)	2	20	410	
	15	44112-12061	CUP-PISTON(NABCO)	2	20	410	
	16	41122-10610	PISTON-CYLINDER,FRONT WHEEL,FORE(TOKICO)	2	10	410	
*	17	41110-10500	PISTON-CYLINDER,FRONT WHEEL,FORE(NABCO)	2	1	410	
	18	41123-10610	COVER-DUST(TOKICO)	2		410	
	19	41123-10500	COVER-DUST(NABCO)	2	10	410	

S	KEY NO.	PART NO.	PART NAME	Q'TY	SALES UNIT	MODEL	ICA
	20	41161-10610	SCREW-BLEEDER(TOKICO)	2	5	410	
	21	41161-10600	SCREW-BLEEDER(NABCO)	2	10	410	
	22	41129-30001	CAP-BLEEDER	2		410	
*	23	41101-10600	ASSY-CYLINDER,FRONT WHEEL,AFTER(R.H.)	1	1	410	
*	24	41103-10600	ASSY-CYLINDER,FRONT WHEEL,AFTER(L.H.)	1	1	410	
*	25	41125-30001	SPRING-PISTON	2	10	410	
*	26	41116-10610	SEAT-SPRING(TOKIKO)	2	10	410	
*	27	41116-10500	SEAT-SPRING(NABCO)	2	5	410	
*	28	44112-12060	CUP-PISTON(TOKICO)	2	20	410	
	29	44112-12061	CUP-PISTON(NABCO)	2	20	410	
	30	41122-10610	PISTON-CYLINDER,FRONT WHEEL,AFTER(TOKICO)	2	10	410	
*	31	41110-10500	PISTON-CYLINDER,FRONT WHEEL,AFTER(NABCO)	2	1	410	
	32	41123-10610	COVER-DUST(TOKICO)	2		410	
	33	41123-10500	COVER-DUST(NABCO)	2	10	410	
	34	41158-04110	PACKING(TOKICO)	2	10	410	
	35	41158-04100	PACKING(NABCO)	4		410	
	36	41130-08010	CONNECTOR(TOKICO)	2	10	410	
	37	41130-08000	CONNECTOR(NABCO)	2	5	410	
	38	41128-08010	BOLT-CONNECTING(TOKICO)	2	10	410	
	39	41162-10600	BOLT-CONNECTING(NABCO)	2	1	410	
	40	41128-30001	SCREW-BLEEDER	2		410	
	41	41129-30001	CAP-BLEEDER	2		410	
	42	00911-14410	NUT	4		410	
	43	00915-11410	WASHER-LOCK	4		410	

Printed in Japan

REVISED: SEPTEMBER,1968

S	KEY NO.	PART NO.	PART NAME	Q'TY	SALES UNIT	MODEL	ICA
	44	00124-52210	BOLT	4	50	410	
	45	00911-24510	NUT	4	100	410	
	46	00915-11510	WASHER-LOCK	4		410	
	47	41140-10600	ASSY-TUBE,BRIDGE,FRONT (R.H.)	1	1	410	
	48	41141-10600	ASSY-TUBE,BRIDGE FRONT (L.H.)	1	1	410	
	49	44081-32201	PIN-ANTI RATTLE,SHOE	4		410	
	50	44082-32200	SEAT-SPRING,ANTI RATTLE,SHOE	4		410	
	51	41083-10600	SPRING-ANTI RATTLE,SHOE	4		410	
	52	44084-32201	RETAINER-SPRING,ANTI RATTLE,SHOE	4	5	410	
	53	40056-10601	CATCHER-GREASE,FRONT	2	10	410	
	54	00124-62510	BOLT(TO FIX BRAKE DISC.)	2	50	410	
	55	41028-10600	CAM-SHOE ADJUSTING	4		410	
	56	41028-10600	CAM-SHOE ADJUSTING	4	1	410	Y
	57	41020-30001	SPRING-SHOE ADJUSTING	4	10	410	
	58	41029-10500	NUT-CAM	4		410	

REVISED: SEPTEMBER,1968

Printed in Japan

NOTE

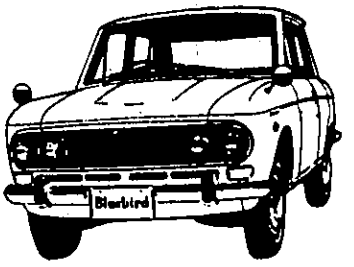

NOTE

REAR BRAKE

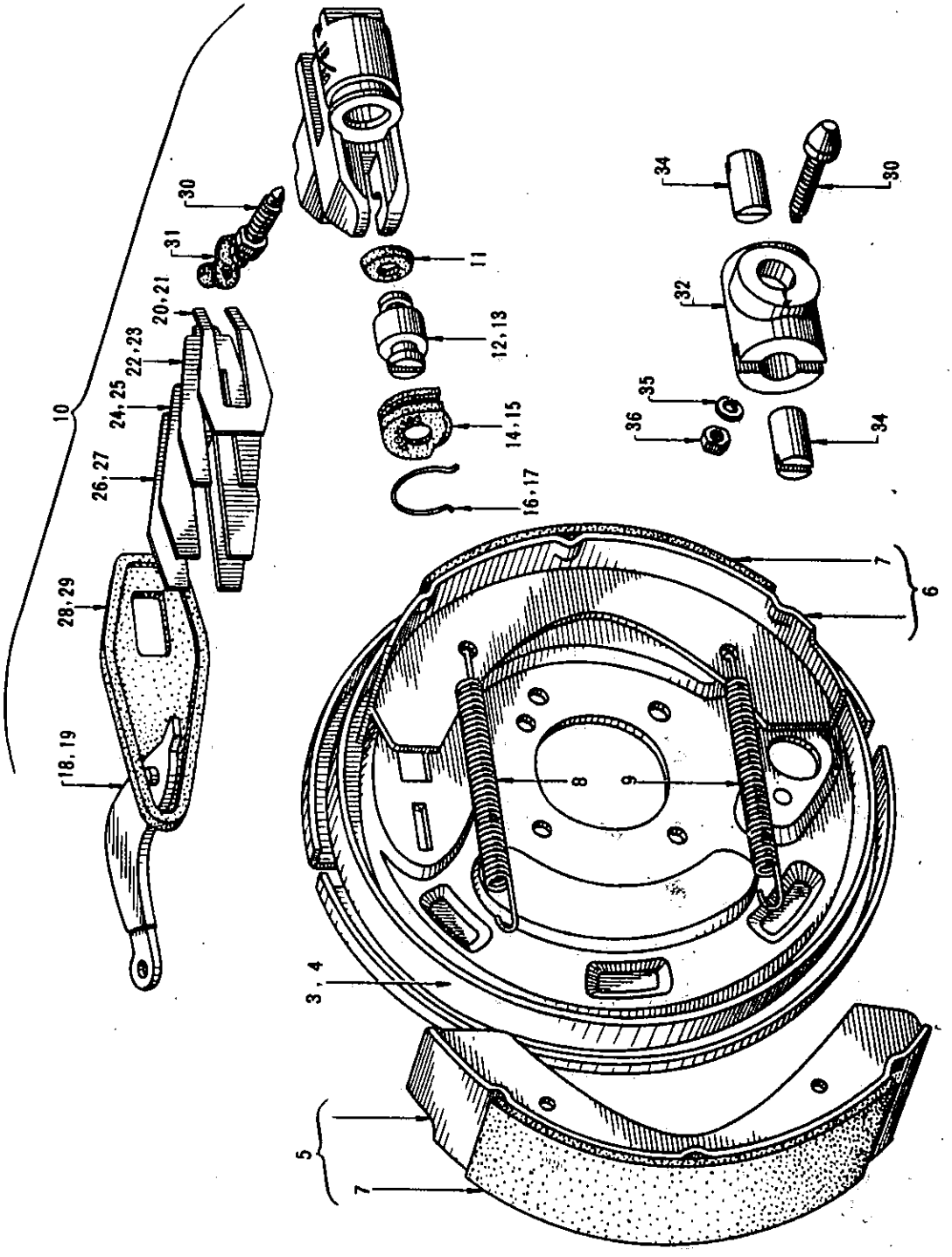
10
30
31
20,21
22,23
24,25
26,27
28,29
18,19
11
12,13
14,15
16,17
34
30
32
35
36
34
7
6
8
9
3,4
5
7

S	KEY NO.	PART NO.	PART NAME	Q'TY	SALES UNIT	MODEL	ICA
			REAR BRAKE				
	1	44000-10600	ASSY-BRAKE,REAR(R.H.)	1	1	410	
	2	44010-10600	ASSY-BRAKE,REAR(L.H.)	1	1	410	
	3	44020-10600	ASSY-DISC,REAR BRAKE(R.H.)	1	1	410	
	4	44030-10600	ASSY-DISC,REAR BRAKE(L.H.)	1	1	410	
*	5	44060-10500	ASSY-SHOE,REAR BRAKE,AFTER	2	1	410	
*	6	44070-10500	ASSY-SHOE,REAR BRAKE,AFTER	2	1	410	
	7	41066-10500	LINING-BRAKE	4	1	410	
	8	44070-30001	SPRING-RETURN,BRAKE SHOE,CYLINDER SIDE	2		410	
	9	44071-30001	SPRING-RETURN,BRAKE SHOE,ADJUSTING SIDE	2	20	410	
	10	44100-10600	ASSY-CYLINDER,REAR WHEEL	2	1	410	
	11	44114-10501	CUP-PISTON	2	5	410	
	12	44110-10610	PISTON-CYLINDER,REAR WHEEL(TOKICO)	2		410	
	13	44110-10501	PISTON-CYLINDER,REAR WHEEL(NABCO)	2	10	410	
	14	44124-31710	COVER-DUST,A(TOKICO)	2	10	410	
	15	44124-31700	COVER-DUST,A(NABCO)	2	10	410	
	16	44113-31710	RING-SNAP(TOKICO)	2	10	410	
	17	44113-31700	RING-SNAP(NABCO)	2	10	410	
	18	44118-30011	ASSY-LEVER(TOKICO)	2	10	410	
	19	44118-30001	ASSY-LEVER(NABCO)	2	1	410	

Printed in Japan

REVISED: SEPTEMBER,1968

S	KEY NO.	PART NO.	PART NAME	QTY	SALES UNIT	MODEL	ICA
	20	44141-31710	SHIM-ADJUSTING,A(TOKICO)	2		410	
	21	44141-31700	SHIM-ADJUSTING,A(NABCO)	2	10	410	
	22	44142-31710	SHIM-ADJUSTING,B(TOKICO)	2		410	
	23	44142-31700	SHIM-ADJUSTING,B(NABCO)	2	10	410	
	24	44149-31710	PLATE-A(TOKICO)	2	10	410	
	25	44149-31700	PLATE-A(NABCO)	2	5	410	
	26	44150-31710	PLATE-B(TOKICO)	2	1	410	
	27	44150-31700	PLATE-B(NABCO)	2	10	410	
	28	44144-31710	COVER-DUST,B(TOKICO)	2		410	
	29	44144-31700	COVER-DUST,B(NABCO)	2	1	410	
	30	41128-30001	SCREW-BLEEDER	2		410	
	31	41129-30001	CAP-BLEEDER	2		410	
*	32	44081-04100	ASSY-HOUSING,BRAKE SHOE ADJUSTER	2	10	410	
	33	44084-30000	WEDGE-ADJUSTER	2	5	410	
	34	44205-10500	TAPPET-ADJUSTER	4	10	410	
	35	00915-11410	WASHER-LOCK	4		410	
	36	00911-14410	NUT	4		410	

Printed in Japan

REVISED: SEPTEMBER,1969

NOTE

BRAKE PIPING

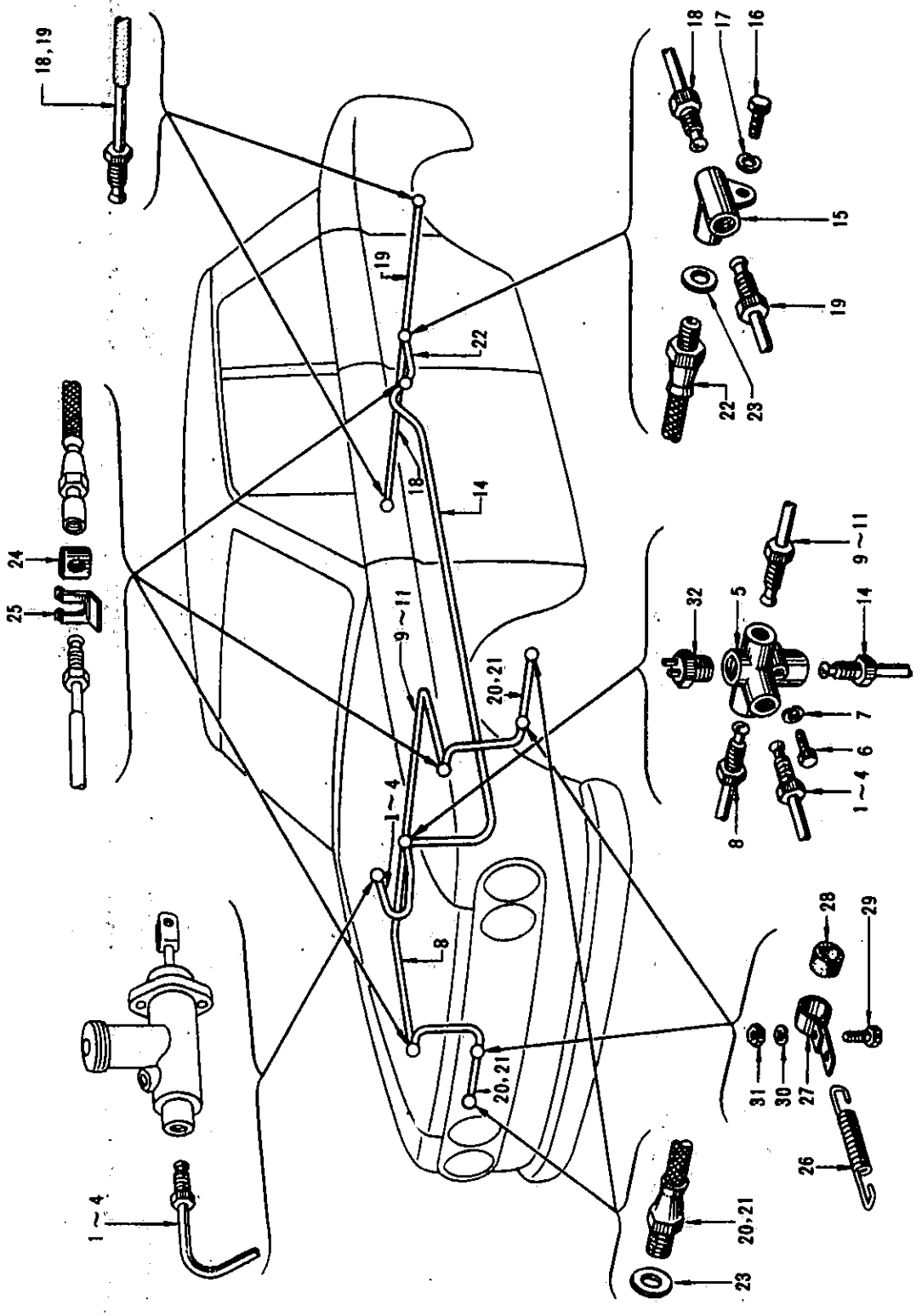

S	KEY NO.	PART NO.	PART NAME	Q'TY	SALES UNIT	MODEL	ICA
			BRAKE PIPING				
	1	46223-10601	ASSY-TUBE BRAKE MASTER CYLINDER TO CONNECTOR	1		R DRIVE 410	
	2	46223-10601	ASSY-TUBE(JUNE-64) BRAKE MASTER CYLINDER TO CONNECTOR	1	5	R DRIVE 410	N
	3	46223-10800	ASSY-TUBE BRAKE MASTER CYLINDER TO CONNECTOR	1	1	L DRIVE 410	
	4	46223-10801	ASSY-TUBE(JUNE-64) BRAKE MASTER CYLINDER TO CONNECTOR	1	1	L DRIVE 410	N
	5	46234-10600	CONNECTOR-5 WAY	1		410	
	6	00114-43010	BOLT TO FIX 5 WAY CONNECTOR	1	50	410	
	7	00915-11410	WASHER-LOCK TO FIX 5 WAY CONNECTOR	1		410	
	8	46240-10600	ASSY-TUBE(R.H.)5 WAY CONNECTOR TO FRONT BRAKE HOSE	1	5	410	
	9	46242-10600	ASSY-TUBE(L.H.)5 WAY CONNECTOR TO FRONT BRAKE HOSE	1		410	C
	10	46240-10651	ASSY-TUBE(R.H.)5 WAY CONNECTOR TO FRONT BRAKE HOSE	1		410	
	11	46242-10650	ASSY-TUBE(L.H.)5 WAY CONNECTOR TO FRONT BRAKE HOSE	1		410	C
*	12	46345-10601	BRACKET-BRAKE HOSE	2	5	410	
	13	00951-10800	GROMMET	2	10	410	
	14	46280-10600	ASSY-TUBE,5 WAY CONNECTOR TO REAR BRAKE HOSE	1	2	410	
*	15	46357-35000	CONNECTOR-3 WAY	1	2	410	

REVISED: SEPTEMBER.1968

Printed in Japan

S	KEY NO.	PART NO.	PART NAME	Q'TY	SALES UNIT	MODEL	ICA
	16	00111-51610	BOLT TO FIX 3 WAY CONNECTOR	1		410	
	17	00915-11510	WASHER-LOCK TO FIX 3 WAY CONNECTOR	1		410	
*	18	46290-10600	ASSY-TUBE(R.H.)3 WAY CONNECTOR TO REAR WHEEL CYLINDER	1	10	410	
*	19	46310-10600	ASSY-TUBE LH 3WAY CONN TO RR WHEEL CYLINDER	1	1	410	
	20	46201-10600	ASSY-HOSE,BRAKE,FRONT(L=450MM)(UP TO C/# 022872)	2		410	
	21	46201-61000	ASSY-HOSE,BRAKE,FRONT(FROM C/# 022873)	2	1	410	N
	22	46201-61001	ASSY-HOSE,BRAKE(L=400MM)	1	2	410	
	23	46237-30000	GASKET	3		410	
	24	46205-61000	PLATE-LOCK,BRAKE HOSE	3	5	410	
	25	46206-61000	SPRING-LOCK,BRAKE HOSE	3		410	
	26	46361-61000	SPRING-BRAKE HOSE	2	10	410	
	27	46362-08500	CLAMP-BRAKE HOSE	2	10	410	
	28	46363-08500	RUBBER-PROTECT,BRAKE HOSE	2	10	410	
	29	00319-01010	SCREW	2		410	
	30	00915-11010	WASHER-LOCK	2	100	410	
	31	00911-14010	NUT	2		410	
*	32	25320-02700	COMP.-SWITCH,STOP LAMP	1	10	410	

Printed in Japan

REVISED: SEPTEMBER,1968

NOTE

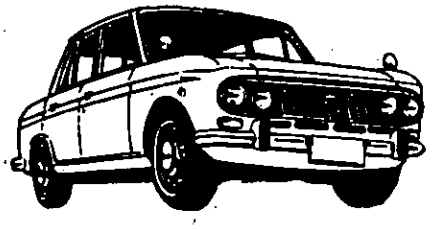

HAND BRAKE CONTROL

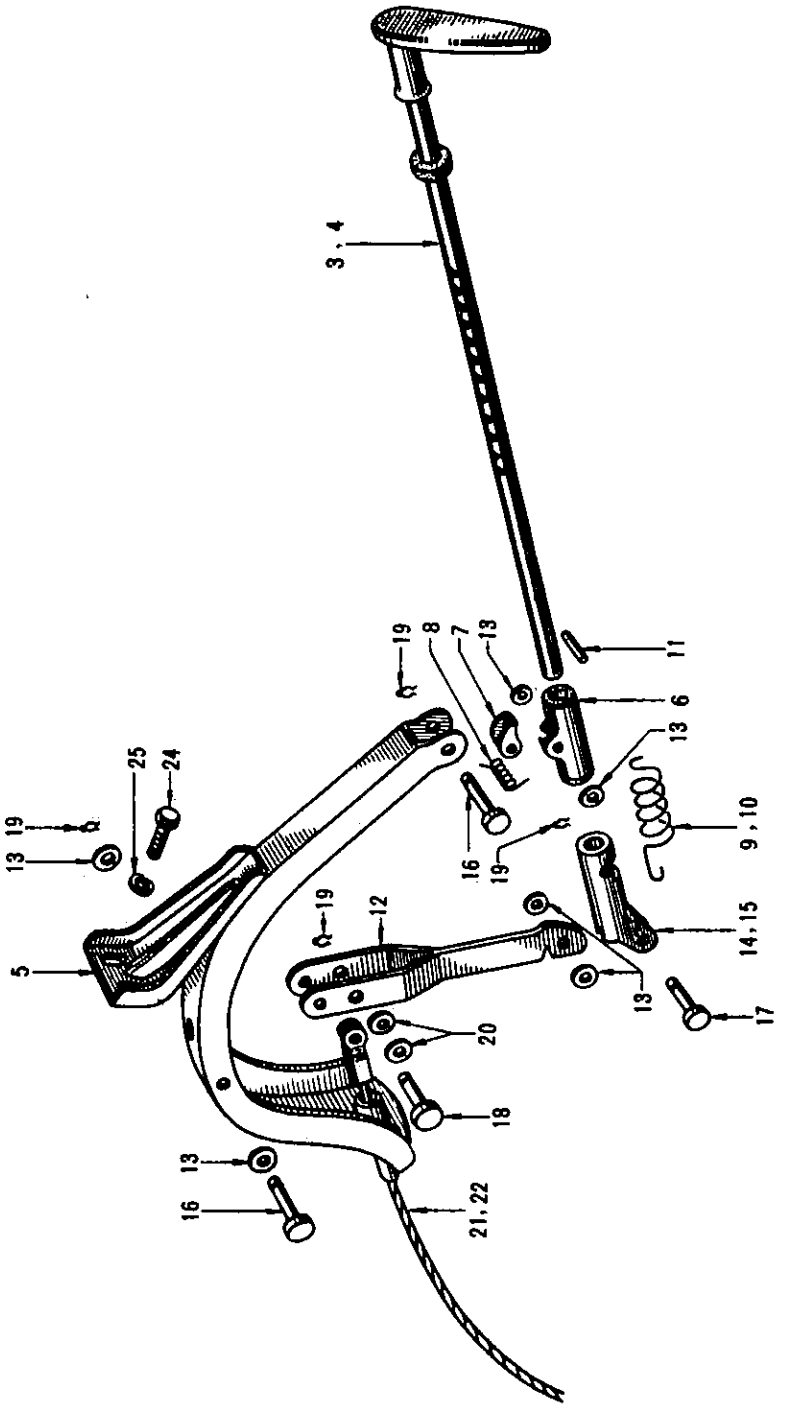

S	KEY NO.	PART NO.	PART NAME	Q'TY	SALES UNIT	MODEL	ICA
			HAND BRAKE CONTROL				
	1	36010-10600	ASSY-CONTROL,HAND BRAKE	1		R DRIVE 410	
*	2	36010-10800	ASSY-CONTROL,HAND BRAKE	1	1	L DRIVE 410	
	3	36326-10600	COMP.-STEM,HAND BRAKE CONTROL	1	1	R DRIVE 410	
	4	36326-10800	COMP.-STEM,HAND BRAKE CONTROL	1	1	L DRIVE 410	
*	5	36328-10601	ASSY-BRACKET,HAND BRAKE CONTROL	1		410	
	6	36335-36700	ASSY-GUIDE,HAND BRAKE CONTROL	1		410	
	7	36320-36700	NAIL-RATCHET,HAND BRAKE CONTROL	1		410	
	8	36330-36700	SPRING-NAIL,HAND BRAKE CONTROL	1	5	410	
	9	36337-10600	SPRING-SET,HAND BRAKE LEVER	1	5	R DRIVE 410	
	10	36337-10800	SPRING-SET,HAND BRAKE LEVER	1	1	L DRIVE 410	
	11	36338-36700	PIN-SET SPRING,HAND BRAKE LEVER	1	10	410	
	12	36372-10600	ASSY-LEVER,HAND BRAKE CONTROL	1	1	410	
*	13	36373-10600	WASHER(NYLON)	6		410	
	14	36339-10600	YOKE-HAND BRAKE CONTROL	1	2	R DRIVE 410	
	15	36339-10800	YOKE-HAND BRAKE CONTROL	1	1	L DRIVE 410	
	16	36377-10600	PIN-CLEVIS	2	10	410	

Printed in Japan

REVISED: SEPTEMBER,1968

S	KEY NO.	PART NO.	PART NAME	Q'TY	SALES UNIT	MODEL	ICA
	17	36378-10600	PIN-CLEVIS	1	10	410	
	18	36379-10600	PIN-CLEVIS	1	10	410	
	19	46124-35100	SPRING-RETAINER	4	10	410	
	20	36374-10600	SPACER(NYLON)	2	10	410	
	21	36402-10600	ASSY-CABLE,FRONT	1	5	R DRIVE 410	
◦	22	36402-10800	ASSY-CABLE,FRONT	1	5	L DRIVE 410	
	23	36382-10600	SPRING-RETURN,HAND BRAKE	1		L DRIVE 410	
	24	00114-41210	BOLT TO FIX HAND BRAKE BRACKET	5		410	
	25	00915-21410	WASHER-LOCK TO FIX HAND BRAKE BRACKET	5		410	

Printed in Japan

REVISED: SEPTEMBER,1968

NOTE

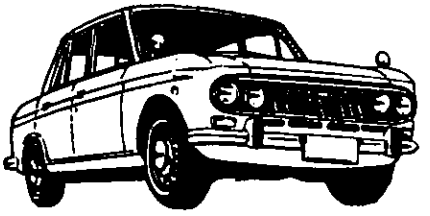

HAND BRAKE LINKAGE

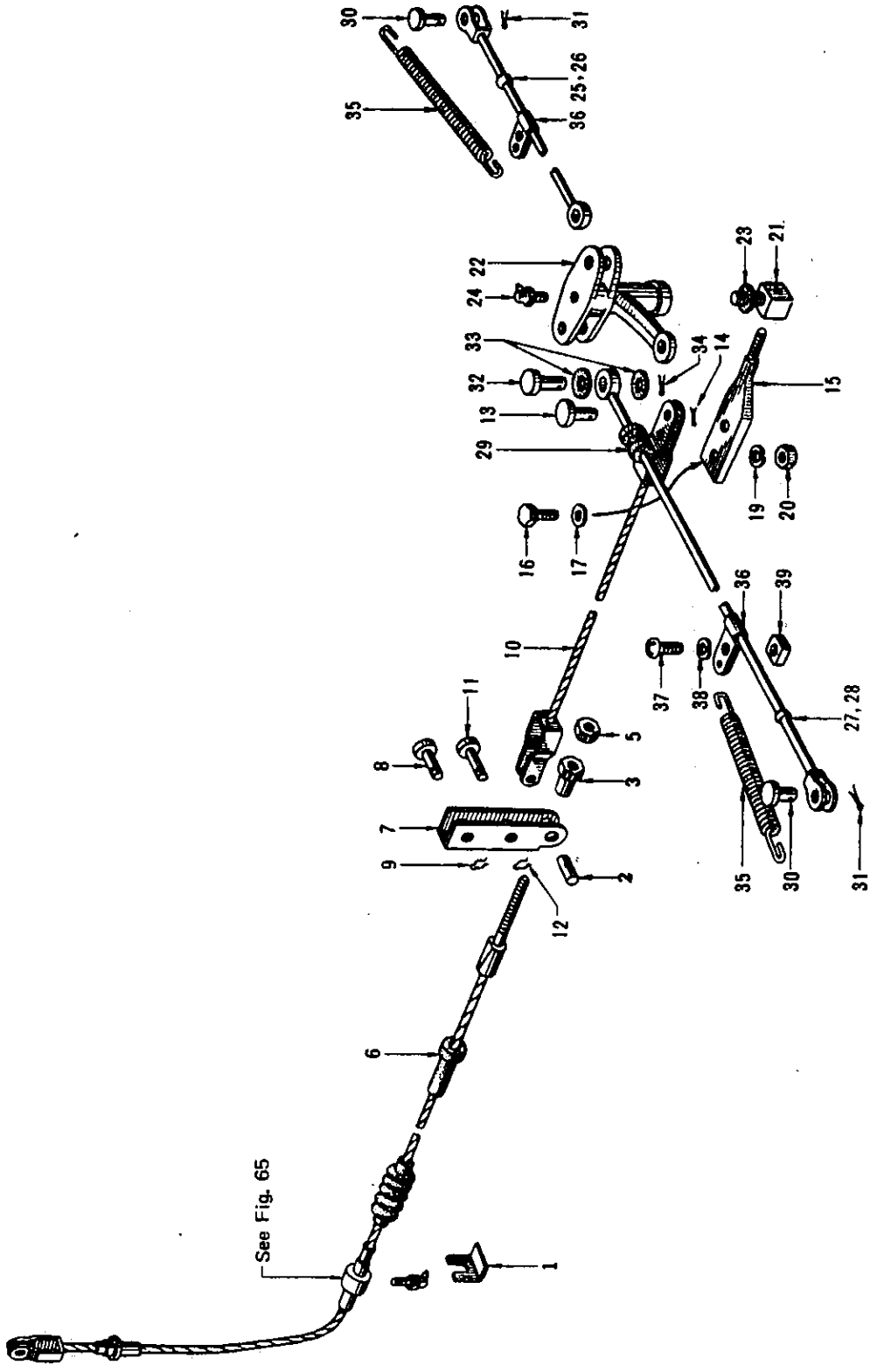

S	KEY NO.	PART NO.	PART NAME	Q'TY	SALES UNIT	MODEL	ICA
			HAND BRAKE LINKAGE				
*	1	36406-32200	PLATE-LOCK,HAND BRAKE CABLE	1	1	410	
	2	36408-36700	TRUNNION-PIN,HAND BRAKE CABLE TO LEVER	1		410	
	3	36437-36700	NUT-ADJUSTING,HAND BRAKE CABLE	1	10	410	
	4	36409-10300	CLIP-HAND BRAKE CABLE, FRONT	1	10	L DRIVE 410	
	5	00911-34410	NUT-LOCK	1		410	
	6	36482-10600	GUIDE-CABLE,HAND BRAKE ,FRONT	1	5	410	
	7	36510-10600	ARM-SWING,HAND BRAKE	1	1	410	
	8	36377-10600	PIN-CLEVIS TO FIX SWING ARM TO BRACKET	1	10	410	
	9	46124-35100	RETAINER-SPRING TO FIX SWING ARM TO BRACKET	1	10	410	
	10	36451-10600	ASSY-CABLE,HAND BRAKE AFTER	1	5	410	
	11	36378-36700	PIN-CLEVIS TO FIX SWING ARM TO CABLE	1	10	410	
	12	46124-35100	RETAINER-SPRING TO FIX SWING ARM TO CABLE	1	10	410	
*	13	36541-30000	PIN-CLEVIS TO FIX CABLE TO BALANCE LEVER	1	50	410	
	14	00921-11810	PIN-COTTER TO FIX CABLE TO BALANCE LEVER	1	50	410	
	15	36510-30000	COMP.-SUPPORT,BALANCE LEVER	1	10	410	
	16	00124-52010	BOLT	2		410	
	17	00915-41510	WASHER-PLAIN	2		410	

S	KEY NO.	PART NO.	PART NAME	Q'TY	SALES UNIT	MODEL	ICA
	18	36513-09400	WASHER-PLAIN	2	5	410	Y
	19	00915-21510	WASHER-LOCK	2		410	
	20	00911-14510	NUT	2		410	
*	21	36514-10600	CARRIER-BALANCE LEVER	1	5	410	
*	22	36518-10600	LEVER-BALANCE,HAND BRAKE	1		410	
*	23	32523-30000	FELT-RING	1	1	410	
	24	00932-30200	NIPPLE-GREASE	1	50	410	
	25	36530-10650	ROD-CROSS,HAND BRAKE,SHORT	1		R DRIVE 410	
*	26	36530-10800	ROD-CROSS,HAND BRAKE,SHORT	1	10	L DRIVE 410	
	27	36531-10650	ROD-CROSS,HAND BRAKE,LONG	1		R DRIVE 410	
*	28	36531-10800	ROD-CROSS,HAND BRAKE,LONG	1	10	L DRIVE 410	
	29	36537-30000	FERRULE-CROSS ROD(RUBBER)	1	100	410	
*	30	36541-30000	PIN-CLEVIS TO FIX CROSS ROD TO WHEEL CYLINDER LEVER	2	50	410	
*	31	00921-11800	PIN-COTTER TO FIX CROSS ROD TO WHEEL CYLINDER LEVER	2	50	410	
	32	36538-30000	PIN-CLEVIS TO FIX CROSS ROD TO BALANCE LEVER	2	20	410	
	33	36543-30000	RING-FELT TO FIX CROSS ROD TO BALANCE LEVER	4	10	410	
	34	00921-01810	PIN-COTTER TO FIX CROSS ROD TO BALANCE LEVER	2	50	410	
	35	36545-30000	SPRING-PULL OFF,CROSS ROD	2	10	410	
	36	36544-30000	BRACKET-HANGER,CROSS ROD	2	10	410	

Printed in Japan

REVISED: SEPTEMBER,1963

S	KEY NO.	PART NO.	PART NAME	Q'TY	SALES UNIT	MODEL	ICA
	37	00314-01010	SCREW TO FIX BRACKET	2	50	410	
	38	00915-11010	WASHER-LOCK TO FIX BRACKET	2	100	410	
	39	00913-14010	NUT TO FIX BRACKET	2	10	410	

Printed in Japan

REVISED: SEPTEMBER, 1968

NOTE

NOTE

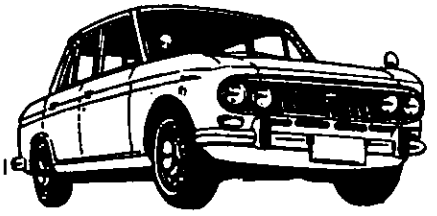

FRONT SUSPENSION LINK

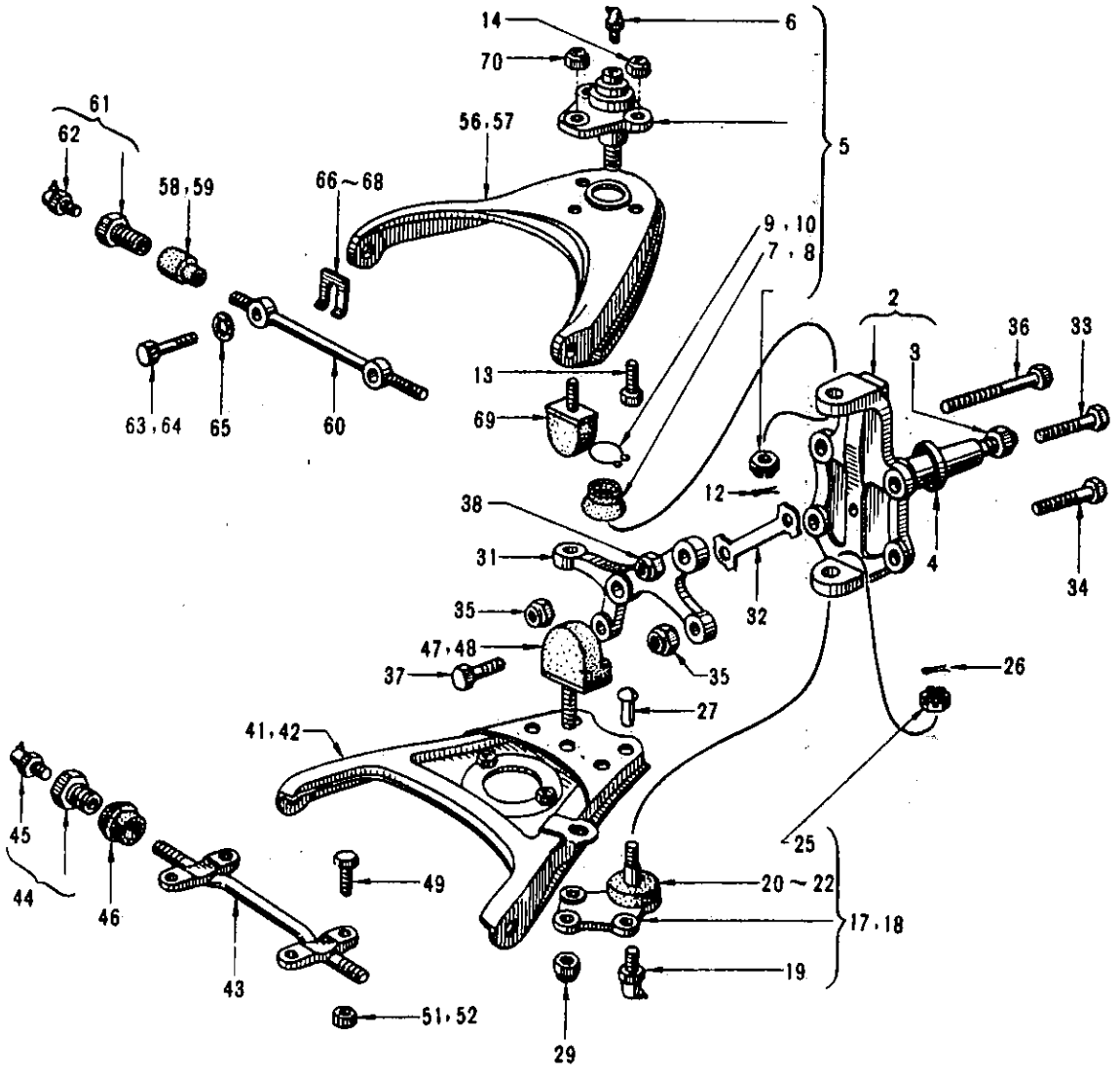

FRONT SUSPENSION LINK

S	KEY NO.	PART NO.	PART NAME	Q'TY	SALES UNIT	MODEL	ICA
	1	40100-10600	ASSY-AXLE,SWIVEL,WITHOUT WHEEL	1		410	
	2	40015-10650	ASSY-SPINDLE,KNUCKLE,WITH NUT(L.H.)	1	1	410	
	3	40040-04100	NUT-KNUCKLE SPINDLE	2	50	410	
	4	40029-25660	COLLAR-FRONT SPINDLE	2		410	
*	5	40060-10601	ASSY-JOINT,BALL,UPPER, FRONT SUSPENSION	2		410	
	6	00932-30200	NIPPLE-GRASE	2	50	410	
*	7	40074-10601	COVER-DUST,UPPER BALL JOINT	2	5	410	
	8	40074-10602	COVER-DUST,UPPER BALL JOINT(FROM 64-9)	2		410	Y
	9	40081-04100	CLAMP-DUST COVER	2	50	410	
	10	40081-04100	CLAMP-DUST COVER(FROM 64-9)	2		410	Y
	11	00911-84710	NUT	2		410	
*	12	00921-32500	PIN-COTTER	2	50	410	
	13	00124-52510	BOLT TO FIX UPPER BALL JOINT	4	50	410	
	14	00912-44510	NUT TO FIX UPPER BALL JOINT	6	50	410	
*	15	40080-10600	ASSY-JOINT,BALL,LOWER, FRONT SUSPENSION(R.H.)	1		410	
*	16	40080-10601	ASSY-JOINT,BALL,LOWER, FRONT SUSPENSION(R.H.) (FROM SEPYE.-64)	1		410	Y
*	17	40090-10600	ASSY-JOINT,BALL,LOWER, FRONT SUSPENSION(L.H.)	1		410	

Printed in Japan

REVISED: SEPTEMBER,1968

S	KEY NO.	PART NO.	PART NAME	Q'TY	SALES UNIT	MODEL	ICA
	18	40161-16500	ASSY-JOINT,BALL,LOWER, FRONT SUSPENSION(L.H.) (FROM SEPT.-64)	1		410	Y
	19	00932-20200	NIPPLE-GREASE	2	100	410	
	20	40094-10601	COVER-DUST,LOWER BALL JOINT(UP TO C/# 4-410-001218)(UP TO C/# 4-P410-056527)	2	50	410	
*	21	40094-10602	COVER-DUST,LOWER BALL JOINT(FROM C/# 4-410-001219)(FROM C/# 4-P410-056528)	2	5	410	Y
	22	40094-10604	COVER-DUST,LOWER BALL JOINT(FROM SEPT.-64)	2		410	Y
	23	40096-10601	CLAMP-COVER,LOWER BALL JOINT(FROM SEPT.-64)	2		410	
	24	40103-13200	CAP-GREASE NIPPLE(FROM SEPT.-64)	2	10	410	
	25	00911-84810	NUT	2	20	410	
*	26	00921-32500	PIN-COTTER	2	50	410	
	27	00610-84000	RIVET TO FIX LOWER BALL JOINT	4	10	410	
	28	00134-54010	BOLT(SERVICE)TO FIX LOWER BALL JOINT	2	50	410	
	29	00912-44610	NUT TO FIX LOWER BALL JOINT	2		410	
	30	40052-10601	ARM-KNUCKLE(R.H.)	1	1	410	
	31	40053-10601	ARM-KNUCKLE(L.H.)	1	1	410	
	32	40057-10601	PLATE-LOCK,KNUCKLE ARM	2	10	410	
	33	00134-65010	BOLT TO FIX KNUCKLE ARM	2	25	410	
	34	00134-66010	BOLT TO FIX KNUCKLE ARM	2	25	410	
	35	00911-24610	NUT TO FIX KNUCKLE ARM	4	100	410	

Printed in Japan

REVISED: SEPTEMBER,1968

S	KEY NO.	PART NO.	PART NAME	QTY	SALES UNIT	MODEL	ICA
	36	00134-64010	BOLT TO FIX KNUCKLE ARM	2	25	410	
	37	40038-10600	BOLT-STOPPER	2	10	410	
	38	00911-34610	NUT	2	50	410	
*	39	54529-10602	ASSY-LINK,LOWER,FRONT SUSPENSION(R.H.)	1		410	
	40	54529-10603	ASSY-LINK,LOWER,FRONT SUSPENSION(R.H.)(FROM C/# 4-P410-42471)	1	1	410	Y
*	41	54530-10602	ASSY-LINK,LOWER,FRONT SUSPENSION(L.H.)	1		410	
	42	54530-10603	ASSY-LINK,LOWER,FRONT SUSPENSION(L.H.)(FROM C/# 4-P410-42471)	1	1	410	Y
	43	54419-10600	SPINDLE-LOWER LINK	2	5	410	
	44	54504-10600	ASSY-BUSHING,LOWER LINK	4	10	410	
	45	00932-20200	NIPPLE-GREASE	4	100	410	
	46	54540-10601	SEAL-DUST,LOWER LINK BUSH	4	20	410	
*	47	54050-10601	ASSY-BUMPER,REBOUND,FRONT SUSPENSION	2		410	
	48	54050-10604	ASSY-BUMPER,REBOUND,FRONT SUSPENSION(FROM C/# 4-P410-43381)	2	1	410	Y
*	49	54551-10600	BOLT	8	1	410	
	50	54554-32200	BOLT	8	10	410	Y
	51	00912-34610	NUT	8	50	410	
	52	00911-24610	NUT	8	100	410	C
	53	00915-21610	WASHER-LOCK	8		410	
*	54	54533-10600	ASSY-LINK,UPPER,FRONT SUSPENSION(R.H.)	1	1	410	

Printed in Japan

REVISED: SEPTEMBER,1968

S	KEY NO.	PART NO.	PART NAME	Q'TY	SALES UNIT	MODEL	ICA
	55	54533-10601	ASSY-LINK,UPPER,FRONT SUSPENSION(R.H.)(FROM C/# 4-P410-48002	1		410	Y
*	56	54534-10600	ASSY-LINK,UPPER,FRONT SUSPENSION(L.H.)	1		410	
	57	54534-10601	ASSY-LINK,UPPER,FRONT SUSPENSION(L.H.)(FROM C/# 4-P410-48002)	1		410	Y
	58	54501-10600	SEAL-DUST,UPPER LINK	4	1	410	
	59	54501-10601	SEAL-DUST,UPPER LINK	4		410	Y
	60	54536-10600	SPINDLE-UPPER LINK	2	5	410	
	61	54507-10600	ASSY-BUSHING,UPPER LIN K	4	10	410	
	62	00932-20200	NIPPLE-GREASE	4	100	410	
*	63	00124-74010	BOLT TO FIX UPPER SPIN DLE	4	25	410	
	64	00124-73510	BOLT TO FIX UPPER SPIN DLE	4	25	410	
	65	00916-21710	WASHER	4	50	410	
	66	54542-04101	SHIM-CAMBER A(1.0T)	4	50	410	
	67	54543-04101	SHIM-CAMBER B(2.0T)	4	2	410	
	68	54544-04101	SHIM-CAMBER C(1.0T)	4	50	410	
*	69	54051-10600	ASSY-STOPPER,REBOUND	2	10	410	
	70	00912-44510	NUT	2	50	410	

Printed in Japan

REVISED: SEPTEMBER,1968

NOTE

FRONT HUB & DRUM

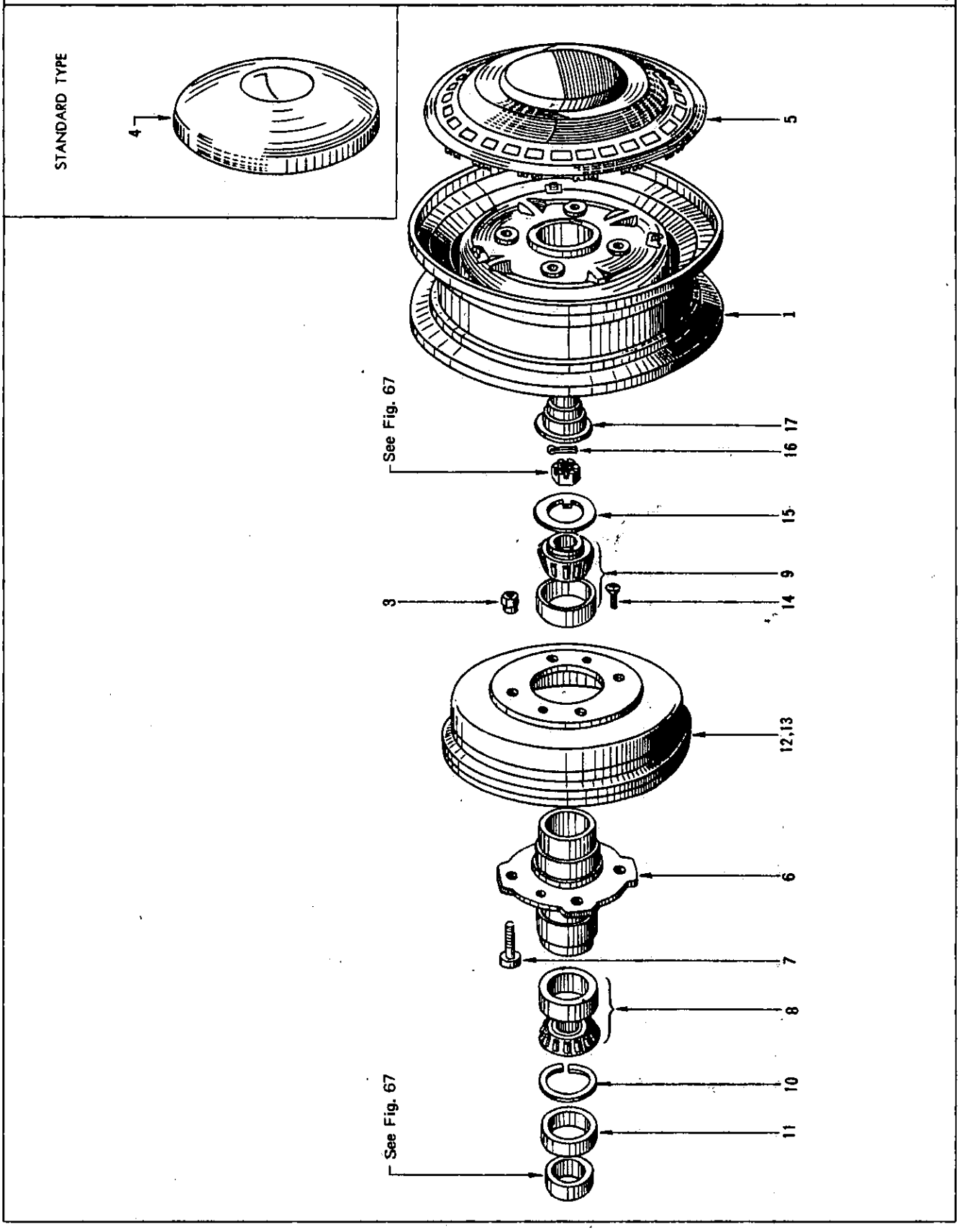

S	KEY NO.	PART NO.	PART NAME	Q'TY	SALES UNIT	MODEL	ICA
			FRONT HUB & DRUM				
	1	40[illegible]0-10600	ASSY-WHEEL,ROAD	5		410	
	2	40307-10600	FASTENER-CAP,ROAD WHEEL	15	10	410	
*	3	40225-04100	NUT-ROAD WHEEL	16	10	410	
	4	40315-10600	CAP-ROAD WHEEL	4		410 A TYPE	
*	5	40315-11401	CAP-ROAD WHEEL,WITH RETAINER & NAIL	4		410 B.D.TYPE	
	6	40202-10650	ASSY-HUB,ROAD WHEEL,FRONT	2		410	
	7	40221-10600	BOLT-HUB,ROAD WHEEL	8	10	410	
	8	38440-14361	BEARING-FRONT WHEEL,INNER	2	1	410	
	9	40215-10360	BEARING-FRONT WHEEL,OUTER	2	10	410	
	10	40231-04100	SPACER-OIL SEAL,FRONT HUB	2	10	410	
*	11	40227-08000	SEAL-OIL,FRONT HUB	2		410	
*	12	40206-10500	DRUM-BRAKE	2		410	
*	13	40206-10501	DRUM-BRAKE(FROM OCT.-64)	2		410	Y
	14	00324-41410	SCREW	4		410	
	15	40037-04100	WASHER-FRONT WHEEL BEARING	2	40	410	
	16	00921-44000	PIN-COTTER	2	50	410	
	17	40234-04100	CAP-HUB,FRONT WHEEL	2	10	410	

Printed in Japan

REVISED: SEPTEMBER,1968

NOTE

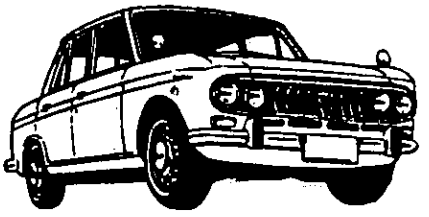

NOTE

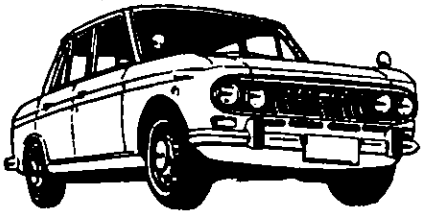

FRONT SUSPENSION MEMBER & SHOCK ABSORBER

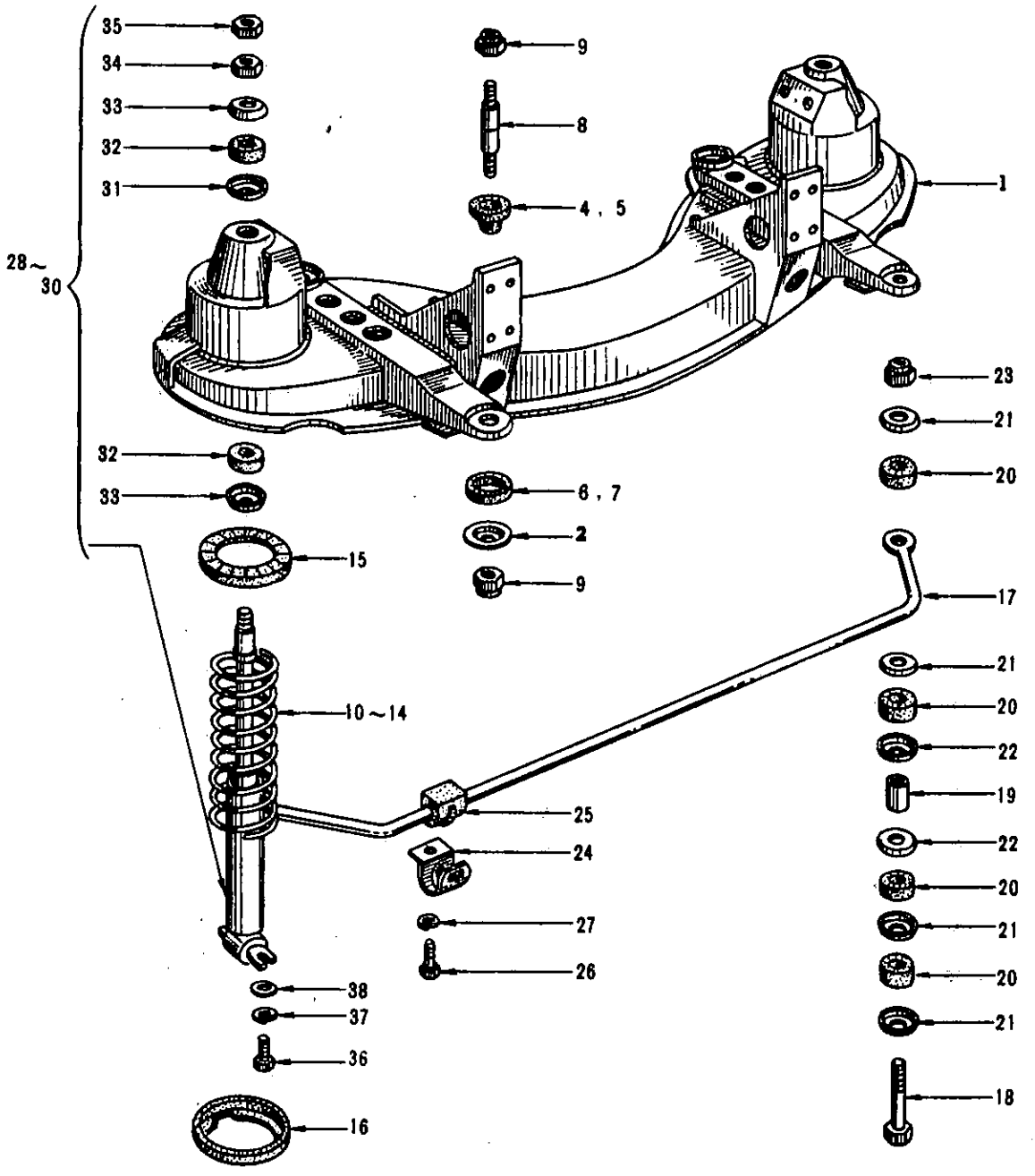

FRONT SUSPENSION MEMBER & SHOCK ABSORBER

S	KEY NO.	PART NO.	PART NAME	QTY	SALES UNIT	MODEL	ICA
	1	54401-10600	ASSY-MEMBER,FRONT SUSPENSION	1	1	410	
	2	54464-10600	WASHER-SPECIAL(FRONT)FOR FRONT SUSPENSION MEMBER MOUNTING	2	5	410	
	3	54465-10600	WASHER-SPECIAL(REAR)FOR FRONT SUSPENSION MEMBER MOUNTING	2	10	410	
	4	54466-10600	PAD-RUBBER(FRONT)FOR FRONT SUSPENSION MEMBER MOUNTING	2	1	410	
	5	54467-10600	PAD-RUBBER(REAR)FOR FRONT SUSPENSION MEMBER MOUNTING	2	1	410	
	6	54468-10600	SEAT-RUBBER(FRONT)FOR FRONT SUSPENSION MEMBER MOUNTING	2	10	410	
	7	54469-10600	SEAT-RUBBER(REAR)FOR FRONT SUSPENSION MEMBER MOUNTING	2	1	410	
	8	54522-10600	BOLT FOR FRONT SUSPENSION MEMBER MOUNTING	4	10	410	
*	9	00912-44700	NUT FOR FRONT SUSPENSION MEMBER MOUNTING	8	50	410	
*	10	54010-10603	SPRING-FRONT(UP TO C/# 4-P410-10731)	2		410	
	11	54010-10604	SPRING-FRONT(R.H.)(FROM C/# 4-P410-10732)	1		410	Y
	12	54010-10604	SPRING-FRONT(OPTION)(UP TO C/# 4-P410-10731)	2		410 FOR HEAVY DUTY	
*	13	54010-10603	SPRING-FRONT(L.H.)(FROM C/# 4-P410-10732)	1		410	Y

Printed in Japan

REVISED: SEPTEMBER,1968

S	KEY NO.	PART NO.	PART NAME	Q'TY	SALES UNIT	MODEL	ICA
	14	54010-11601	SPRING-FRONT	2		410 FOR HIGH SPEED	
	15	54036-10600	SEAT-UPPER,FRONT SPRING	2		410	
	16	54037-10600	SEAT-LOWER,FRONT SPRING	2		410	
	17	54611-10600	BAR-TENSION,FRONT STABILIZER	1	1	410	
	18	54619-10601	ROD-CONNECTING,FRONT STABILIZER	2	1	410	
	19	54630-10600	SPACER-FRONT STABILIZER	2	10	410	
	20	56112-09400	BUSHING-RUBBER	8		410	
	21	56113-09400	WASHER-SPECIAL,OUTER	8	10	410	
	22	56114-09400	WASHER-SPECIAL,INNER	4	10	410	
	23	00912-34610	NUT	2	50	410	
	24	54614-10600	BRACKET-STABILIZER MOUNTING	2	10	410	
	25	54613-32200	BUSHING-RUBBER,STABILIZER	2	50	410	
	26	00114-51810	BOLT	2		410	
	27	00915-11510	WASHER-LOCK	2		410	
	28	56110-10625	KIT-ABSORBER,SHOCK,FRONT	2		410	
	29	56110-10627	KIT-ABSORBER,SHOCK,FRONT(OPTION)	2		410 FOR HEAVY DUTY	
	30	56110-11625	KIT-ABSORBER,SHOCK FRONT	2		410 FOR HIGH SPEED	
	31	56114-09400	WASHER-SPECIAL,INNER	2	10	410	
	32	56112-09400	BUSHING-RUBBER,SHOCK ABSORBER	4		410	
	33	56113-09400	WASHER-SPECIAL,OUTER	4	10	410	

Printed in Japan

REVISED: SEPTEMBER,1968

S	KEY NO.	PART NO.	PART NAME	Q'TY	SALES UNIT	MODEL	ICA
	34	00911-14610	NUT	2		410	
	35	00911-34610	NUT-LOCK	2	50	410	
	36	00124-52010	BOLT	4		410	
	37	00915-11510	WASHER-LOCK	4		410	
	38	00915-41510	WASHER-PLAIN	4		410	
	39	56140-10600	ASSY-MOUNTING,LOWER,FRONT SHOCK ABSORBER(39.6)	2		410	

NOTE

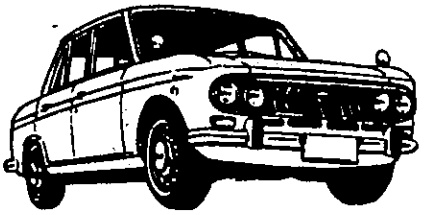

NOTE

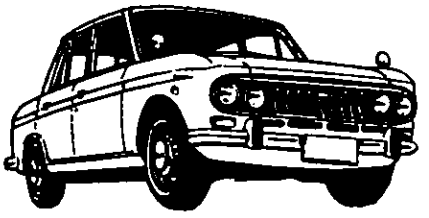

REAR AXLE

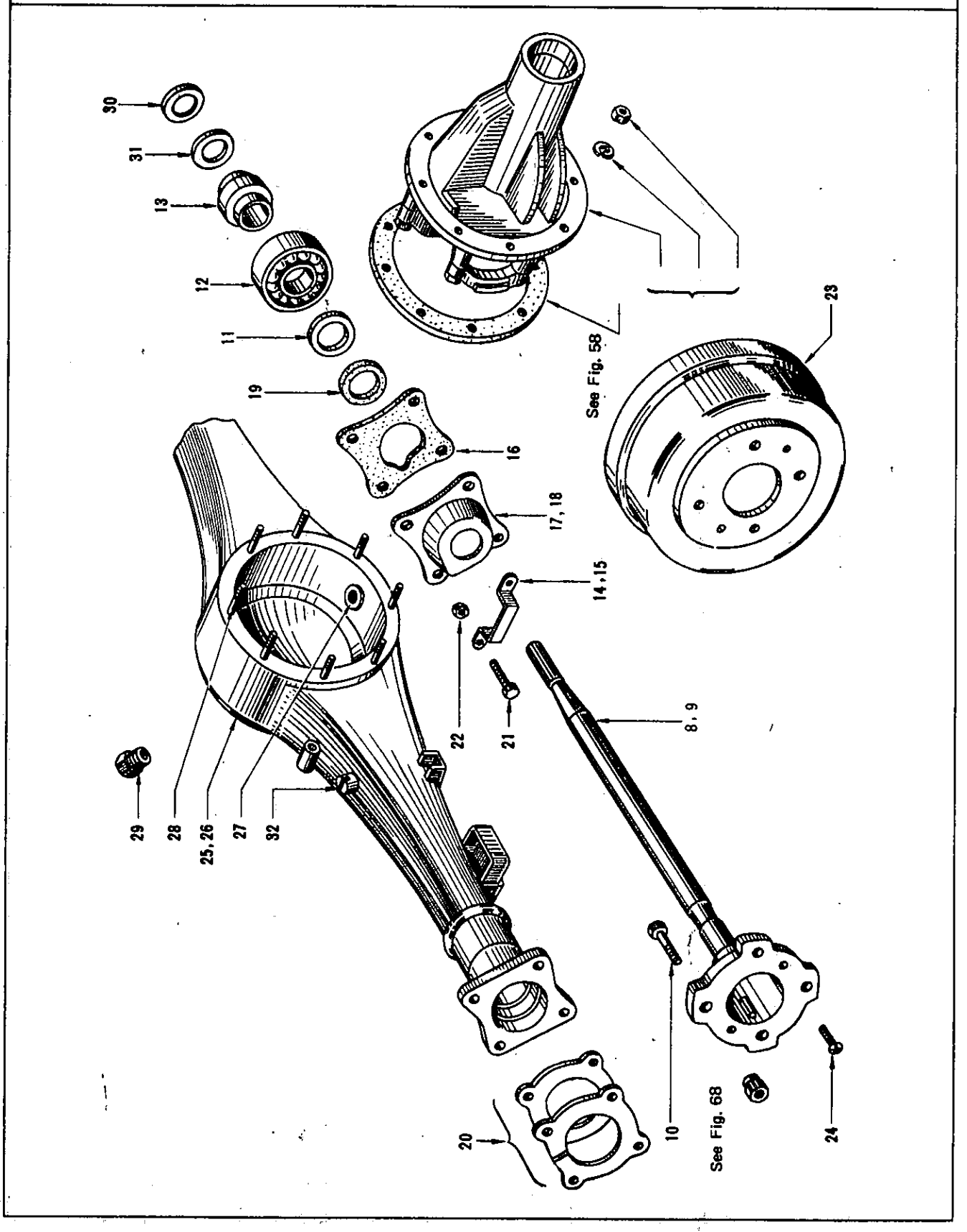
30
31
13
12
11
19
16
17, 18
14, 15
22
21
8, 9
29
28
25, 26
27
32
20
10
See Fig. 68
24
See Fig. 58
23

S	KEY NO.	PART NO.	PART NAME	Q'TY	SALES UNIT	MODEL	ICA
			REAR AXLE				
	1	43100-10800	ASSY-AXLE,REAR,WITH DRUM	1		L,LN,WL,WLN,410	
	2	43100-10801	ASSY-AXLE,REAR,WITH DRUM	1		LU,LUN,WLU,WLUN,410	
	3	43100-11600	ASSY-AXLE,REAR,WITH DRUM(FINAL GEAR RATIO 35 T:8T)	1		U,UN,WU,WUN,&(OP)4 SPEED,SS 410	
	4	43100-12400	ASSY-AXLE,REAR,WITH DRUM(FINAL GEAR RATIO 37 T:9T)	1		R DRIVE 4 SPEED 410, SS 410	
	5	43100-12401	ASSY-AXLE,REAR,WITH DRUM(FINAL GEAR RATIO 35 T:8T)	1		(OP)R DRIVE 4 SPEED 410	
	6	43100-12500	ASSY-AXLE,REAR,WITH DRUM(FINAL GEAR RATIO 37 T:9T)	1		L DRIVE 4 SPEED 410	
	7	43100-12501	ASSY-AXLE,REAR,WITH DRUM(FINAL GEAR RATIO 35 T:8T)	1		(OP)L DRIVE 4 SAEED 410	
*	8	38164-10600	SHAFT-REAR AXLE	2		410	
	9	38164-10601	SHAFT-REAR AXLE	2	1	410	Y
	10	40221-04101	BOLT-ROAD WHEEL	8	10	410	
	11	43070-04101	SPACER-REAR AXLE BEARING	2	10	410	
	12	43215-08000	BEARING-REAR AXLE	2	1	410	
	13	43084-10600	COLLER-BEARING,REAR AXLE	2	10	410	
	14	43036-04100	SHIM-REAR AXLE CASE END	AR	10	410	
	15	43036-10601	SHIM-REAR AXLE CASE END	AR	10	410	Y

S	KEY NO.	PART NO.	PART NAME	Q'TY	SALES UNIT	MODEL	ICA
	16	43239-04100	PACKING-GREASE CATCHER	2	10	410	
	17	43234-04101	ASSY-CATCHER,GREASE(R.H.)	1	10	410	
	18	43235-04101	ASSY-CATCHER,GREASE(L.H.)	1	1	410	
	19	43223-04101	SEAL-GREASE,REAR AXLE BEARING	2	20	410	
	20	43233-04100	PLATE-LOCK,BRAKE DISC FIXING BOLT	4		410	
	21	43083-04101	BOLT TO FIX BRAKE DISC	8	10	410	
	22	00912-44510	NUT TO FIX BRAKE DISC	8	50	410	
*	23	40206-10500	DRUM-BRAKE	2		410	
	24	00324-41410	SCREW(TO BRAKE DRUM)	4		410	
	25	43010-10600	COMP.-CASE,REAR AXLE	1		R DRIVE 410	
	26	43010-10800	COMP.-CASE,REAR AXLE	1		L DRIVE 410	
*	27	43027-04100	ASSY-PLUG,DRAIN	1		410	
	28	43067-30000	STUD-GEAR CARRIER	8	10	410	
*	29	00931-11200	PLUG-TAPER	1	50	410	
	30	43068-04101	SPACER-OIL SEAL,REAR AXLE	2	10	410	
	31	38212-04101	SEAL-OIL,REAR AXLE SHAFT	2	10	410	
	32	38322-55100	ASSY-BREATHER	1	10	410	

Printed in Japan

REVISED: SEPTEMBER,1968

NOTE

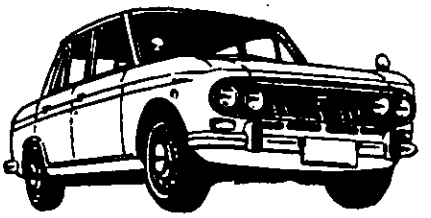

REAR SUSPENSION

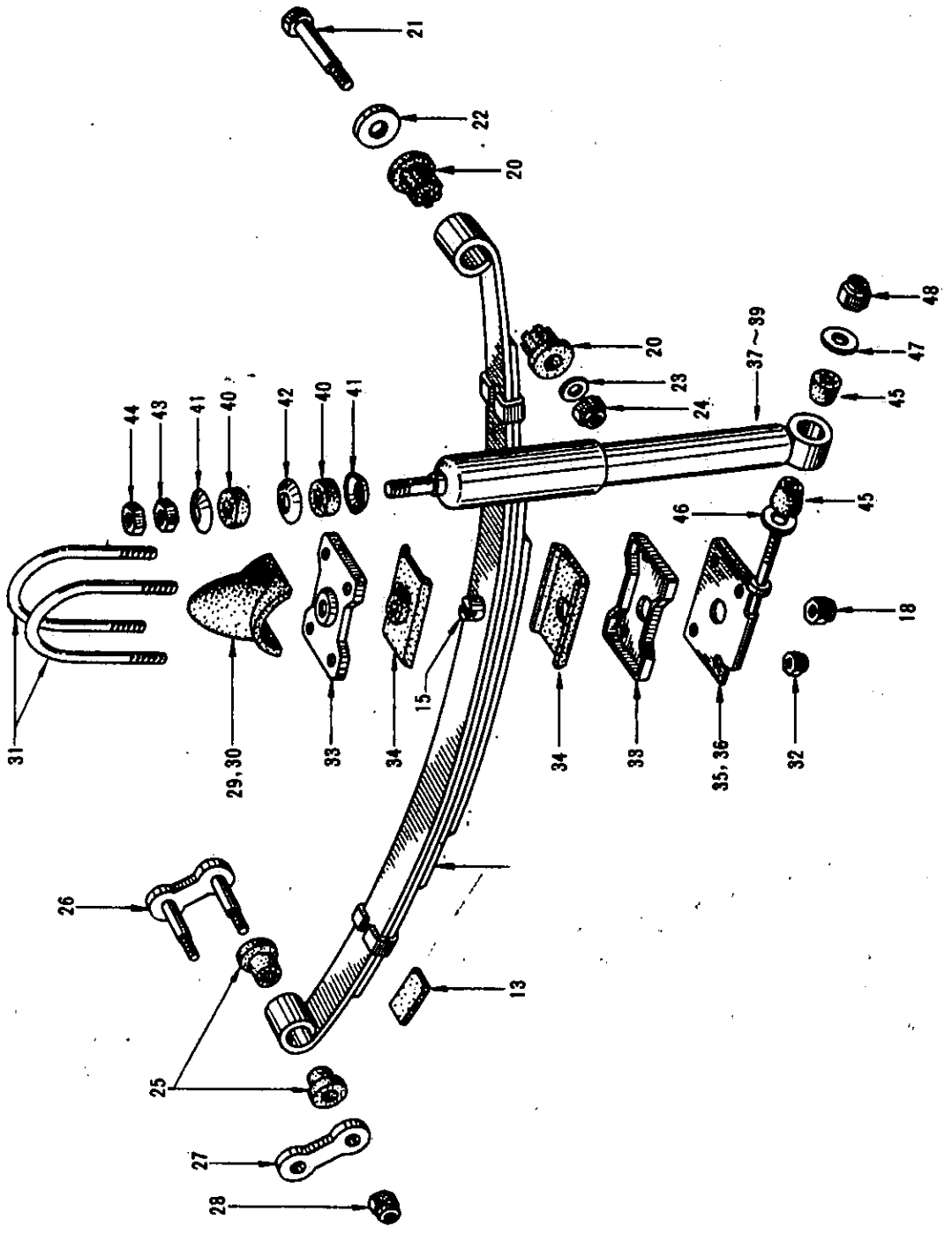

S	KEY NO.	PART NO.	PART NAME	Q'TY	SALES UNIT	MODEL	ICA
			REAR SUSPENSION				
	1	55020-11602	ASSY-SPRING,REAR	2		SEDAN,410	
	2	55021-11602	LEAF-REAR SPRING(NO.1)	2		SEDAN,410	
	3	55022-11602	LEAF-REAR SPRING(NO.2)	2	1	SEDAN,410	
	4	55023-11602	LEAF-REAR SPRING(NO.3)	2		SEDAN,410	
	5	55024-11602	LEAF-REAR SPRING(NO.4)	2		SEDAN,410	
	6	55025-11602	LEAF-REAR SPRING(NO.5)	2		SEDAN,410	
	7	55020-11002	ASSY-SPRING,REAR	2		WAGON,410	
	8	55021-11002	LEAF-REAR SPRING(NO.1)	2		WAGON,410	
	9	55022-11002	LEAF-REAR SPRING(NO.2)	2		WAGON,410	
	10	55023-11002	LEAF-REAR SPRING(NO.3)	2		WAGON,410	
	11	55024-11002	LEAF-REAR SPRING(NO.4)	2		WAGON,410	
*	12	55025-11002	LEAF-REAR SPRING(NO.5)	2		WAGON,410	
	13	55041-10605	PAD-REAR SPRING	AR		410	
	14	55030-10903	SPACER-REAR SPRING	2		WAGON 410	
	15	55057-11600	BOLT-CENTER,REAR SPRING	2		SEDAN,410	
	16	55057-11002	BOLT-CENTER,REAR SPRING	2		WAGON,410	
	17	55056-04100	PIECE-DISTANCE,CENTER BOLT NUT	2		410	
	18	00999-20410	NUT	2	100	410	
	19	55260-10600	ASSY-SEAT,REAR SPRING	2	1	410	
	20	55045-10610	BUSHING-REAR SPRING,FRONT	4	1	410	
	21	55215-10601	ASSY-PIN,REAR SPRING,FRONT	2	10	410	

Printed in Japan

REVISED: SEPTEMBER,1968

S	KEY NO.	PART NO.	PART NAME	Q'TY	SALES UNIT	MODEL	ICA
	22	55218-10600	CAP-BRACKET,REAR SPRING,FRONT	2	5	410	
	23	55219-10602	WASHER-FRONT,REAR SPRING	2	5	410	
	24	00912-44910	NUT	2	50	410	
	25	55046-10610	BUSHING-REAR,REAR SPRING	8	10	410	
	26	55220-10600	ASSY-SHACKLE,REAR SPRING	2	2	410	
	27	55221-10600	SHACKLE-REAR SPRING	2	5	410	
	28	00912-44710	NUT	4		410	
	29	55240-10600	ASSY-BUMPER,REAR AXLE	2		410	
	30	55240-13200	ASSY-BUMPER,REAR AXLE(FROM SEPT.-64)	2	1	410	N
	31	55247-10600	CLIP-REAR SPRING	4	2	410	
	32	00912-34610	NUT	8	50	410	
	33	55054-04101	PLATE-LOCATION,REAR SPRING	4	1	410	
	34	55243-04100	PAD-SEAT,REAR SPRING	4	2	410	
*	35	55262-10600	ASSY-SEAT,LOWER,REAR SPRING(R.H.)	1	1	410	
*	36	55266-10600	ASSY-SEAT,LOWER,REAR SPRING(L.H.)	1	1	410	
	37	56210-10627	KIT-ABSORBER,SHOCK,REAR(OPTION)	2		410 FOR HEAVY DUTY	
	38	56210-13226	KIT-ABSORBER,SHOCK,REAR(OPTION)(FROM SEPT.-64)	2		410 FOR HEAVY DUTY	N
	39	56210-11625	KIT-ABSORBER,SHOCK,REAR	2		410	
	40	56112-09400	BUSHING-RUBBER,SHOCK ABSORBER	4		410	
	41	56113-09400	WASHER-SPECIAL,OUTER	4	10	410	

Printed in Japan

REVISED: SEPTEMBER,1968

S	KEY NO.	PART NO.	PART NAME	Q'TY	SALES UNIT	MODEL	ICA
	42	56114-09400	WASHER-SPECIAL,INNER	2	10	410	
	43	00911-14610	NUT	2		410	
	44	00911-34610	NUT	2	50	410	
	45	56119-32201	BUSHING-RUBBER,SHOCK ABSORBER MOUNTING	4		410	
	46	56121-32201	WASHER-FRONT,SHOCK ABSORBER MOUNTING	2	10	410	
	47	56225-10601	WASHER-SPECIAL,SHOCK ABSORBER MOUNTING	2	50	410	
	48	00912-34710	NUT	2	100	410	

Printed in Japan

REVISED: SEPTEMBER,1968

NOTE

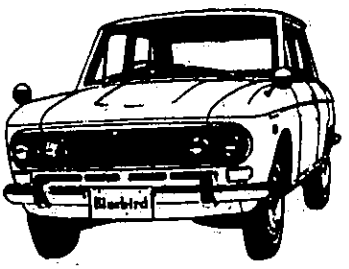

NOTE

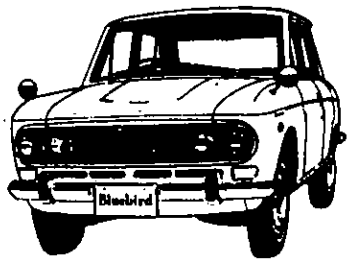

STEERING WHEEL

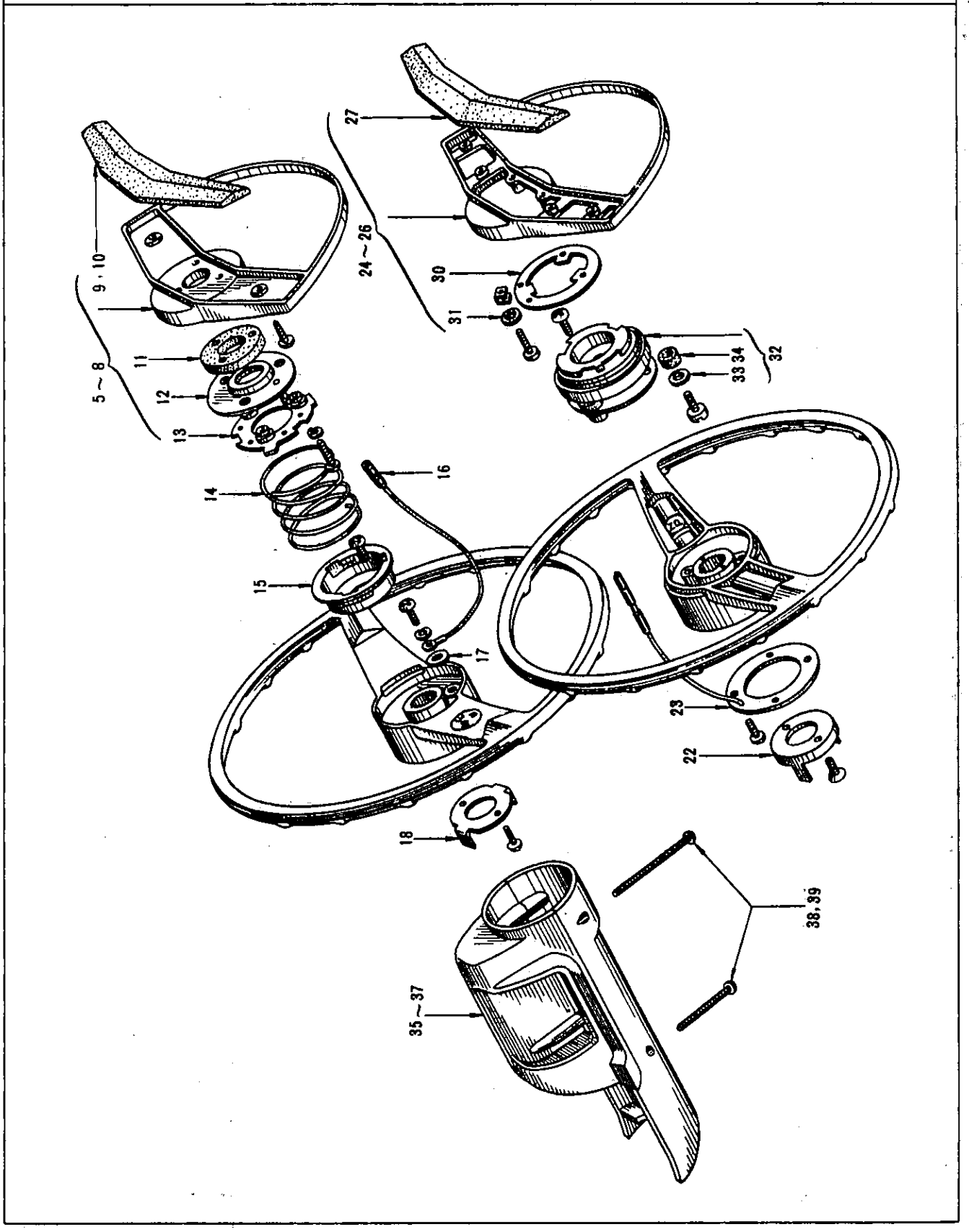

S	KEY NO.	PART NO.	PART NAME	Q'TY	SALES UNIT	MODEL	ICA
			STEERING WHEEL				
*	1	48400-10600	ASSY-WHEEL,STEERING(BLACK)	1		410	
	2	48400-13200	ASSY-WHEEL,STEERING(BLACK)(FROM SEPT.-64)	1		410	Y
	3	48400-11500	ASSY-WHEEL,STEERING(YELLOW)	1		410	
*	4	48400-13700	ASSY-WHEEL,STEERING(YELLOW)(FROM SEPT.-64)	1		410	Y
*	5	48420-10600	ASSY-RING,HORN(BLACK)	1	1	410	
	6	48420-13200	ASSY-RING,HORN(BLACK)(FROM SEPT.-64)	1		410	Y
	7	48420-11500	ASSY-RING,HORN(YELLOW)	1		410	
*	8	48420-13700	ASSY-RING,HORN(YELLOW)(FROM SEPT.-64)	1	1	410	Y
	9	48422-10600	PAD-HORN RING(BLACK)	1	1	410	
	10	48422-11500	PAD-HORN RING(YELLOW)	1	5	410	
	11	48423-10600	CUSHION-CONTACT PLATE	1		410	
	12	48424-10600	PLATE-CONTACT	1	5	410	
	13	48425-10600	SEAT-SPRING	1	5	410	
	14	48426-10600	SPRING-HORN RING	1	10	410	
	15	48427-10600	CUP-SEAT SPRING	1	5	410	
	16	48428-10600	CORD-HORN	1	10	410	
	17	48429-10600	INSULATOR-HORN CORD	1	10	410	
	18	48430-10600	CAN-CELLING CAM	1	10	410	
*	19	48400-10610	ASSY-WHEEL,STEERING(BLACK)	1	1	410	

Printed in Japan

REVISED: SEPTEMBER,1968

S	KEY NO.	PART NO.	PART NAME	Q'TY	SALES UNIT	MODEL	ICA
	20	48400-13200	ASSY-WHEEL,STEERING(BLACK)	1		410	Y
	21	48400-11510	ASSY-WHEEL,STEERING(YELLOW)	1	1	410	
	22	48430-10610	CAN-CELLING CAM	1	5	410	
	23	48429-10610	ASSY-RING,SRIP	1	5	410	
*	24	48420-10610	ASSY-RING,HORN(BLACK)	1	1	410	
	25	48420-13200	ASSY-RING,HORN(BLACK)	1		410	Y
	26	48420-11510	ASSY-RING,HORN(YELLOW)	1	1	410	
	27	48422-10610	PAD-HORN RING(BLACK)	1		410	
	28	48422-13210	COVER-HORN RING(BLACK)	1	1	410	Y
	29	48422-11510	PAD-HORN RING(YELLOW)	1		410	
	30	48431-10610	PLATE-CLAMP	1	10	410	
	31	48432-10610	BUSHING-HORN RING(NYLON)	4		410	
	32	48450-10610	ASSY-CONTACT,HORN	1	5	410	
	33	48451-10610	BUSHING-HORN SEAT	3	5	410	
	34	48452-10610	CUSHION-BUSHING	3	10	410	
	35	48327-10651	SET-SHELL,STEERING(BLACK)	1	10	R DRIVE,3 SPEED 410	
	36	48327-11550	SET-SHELL,STEERING(YELLOW)	1		R DRIVE,3 SPEED 410	
	37	48327-10851	SET-SHELL,STEERING(BLACK)	1	1	L DRIVE,3 SPEED 410	
	38	00310-61010	SCREW(TO FIX SHELL)	4	50	3 SPEED 410	
	39	00330-61410	SCREW(TO FIX TURN SIGNAL SWITCH TO SHELL)	1	50	3 SPEED 410	
	40	48327-12450	SET-SHELL,STEERING	1	1	4 SPEED,SS 410	

Printed in Japan

REVISED: SEPTEMBER,1968

S	KEY NO.	PART NO.	PART NAME	Q'TY	SALES UNIT	MODEL	ICA
	41	00310-61610	SCREW TO FIX SHELL	4	50	4 SPEED 410	
	42	00915-10610	WASHER-LOCK TO FIX SHELL	4		4 SPEED 410	
	43	00330-61010	SCREW(TO FIX TURN SIGNAL SWITCH TO SHELL)	1	50	4 SPEED 410	

Printed in Japan

REVISED: SEPTEMBER,1968

NOTE

NOTE

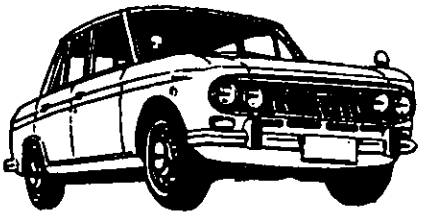

STEERING GEAR

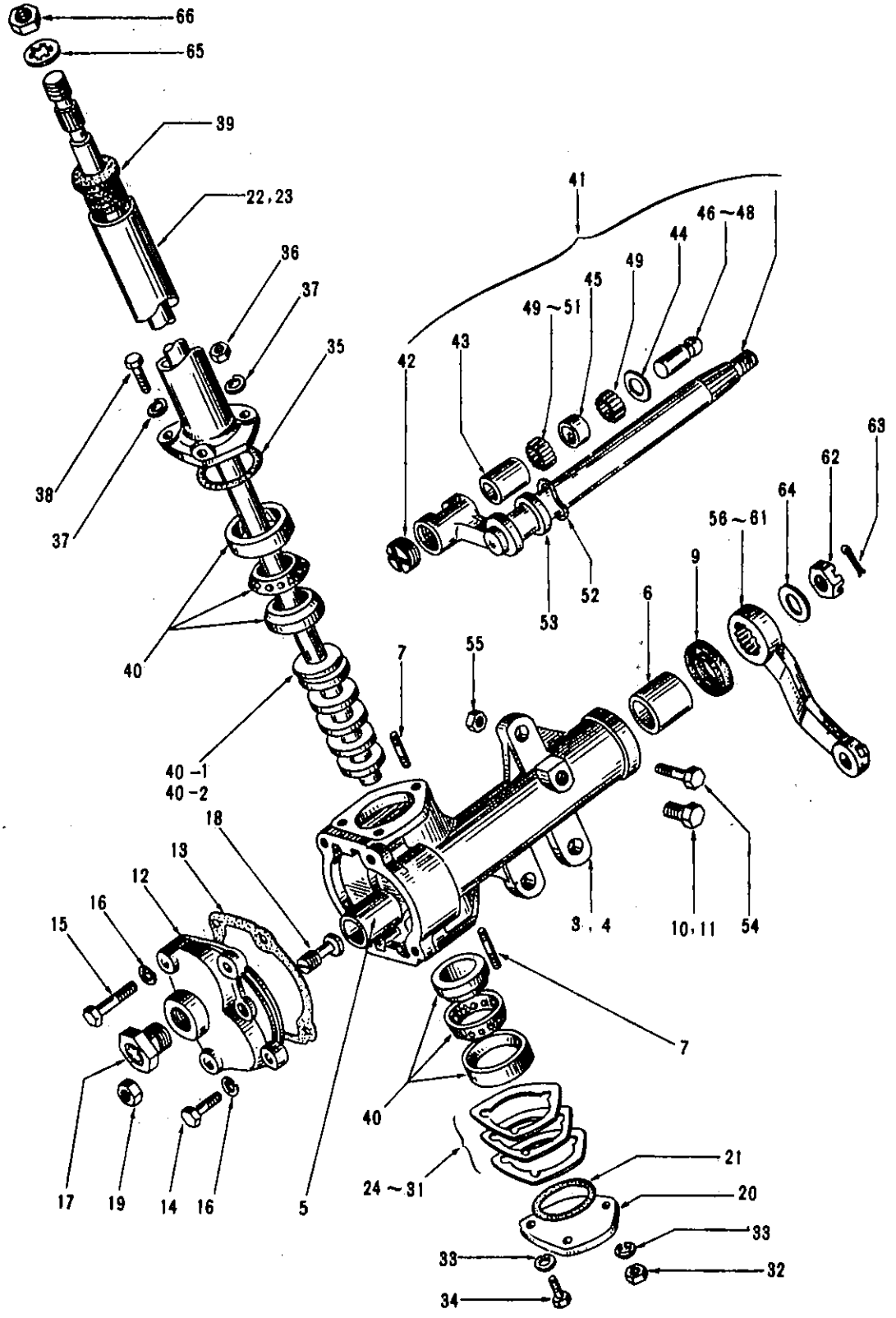

S	KEY NO.	PART NO.	PART NAME	Q'TY	SALES UNIT	MODEL	ICA
			STEERING GEAR				
	1	48010-10651	ASSY-STEERING GEAR	1		R DRIVE 410	
	2	48010-10851	ASSY-STEERING GEAR	1	1	L DRIVE 410	
	3	48011-10601	ASSY-HOUSING,STEERING	1		R DRIVE 410	
	4	48011-10801	ASSY-HOUSING,STEERING	1	1	L DRIVE 410	
	5	48127-32200	BUSHING-IDLER SHAFT	1		410	
	6	48128-32200	BUSHING-STEERING GEAR HOUSING	1	2	410	
	7	48206-30800	STUD-HOUSING,FRONT	2	10	410	
	8	68643-00800	BUMPER(USE,TO REMOTE CONTROL HOLE OF STEERING GEAR HOUSING)	1	50	4 SPEED 410	
	9	48137-36700	SEAL-OIL,ROCKER SHAFT	1	10	410	
	10	11120-10460	PLUG-DRAIN	1		R DRIVE 410	
	11	11120-10490	PLUG-DRAIN	1	10	L DRIVE 410	
	12	48201-10600	COVER-ROCKER SHAFT	1	1	410	
	13	48204-10600	GASKET-ROCKER SHAFT	1	50	410	
	14	00124-52500	BOLT(SHORT)TO FIX ROCKER SHAFT COVER	2		410	
	15	00124-53510	BOLT(LONG)TO FIX ROCKER SHAFT COVER	2		410	
	16	00915-11500	WASHER-LOCK TO FIX ROCKER SHAFT COVER	4	50	410	
	17	48064-27160	PLUG-FILLER	1	10	410	

Printed in Japan

REVISED: SEPTEMBER,1968

S	KEY NO.	PART NO.	PART NAME	Q'TY	SALES UNIT	MODEL	ICA
	18	48135-30800	SCREW-ROCKER SHAFT ADJUSTING	1	10	410	
	19	00911-34710	NUT	1		410	
	20	48219-10600	COVER-HOUSING,FRONT	1	10	410	
	21	48035-04100	O RING-HOUSING COVER	1	10	410	
	22	48050-10600	COMP.-COLUMN,JACKET	1	1	R DRIVE 410	
	23	48050-10800	COMP.-COLUMN,JACKET	1	1	L DRIVE 410	
	24	48210-10600	SHIM-WORM BEARING(0.762T)	AR	10	410	
*	25	48211-10602	SHIM-WORM BEARING(0.05T)	AR	50	410	Y
	26	48211-10600	SHIM-WORM BEARING(0.254T)	AR		410	
*	27	48212-10602	SHIM-WORM BEARING(0.125T)	AR	50	410	Y
	28	48212-10600	SHIM-WORM BEARING(0.127T)	AR		410	
*	29	48213-10602	SHIM-WORM BEARING(0.25T)	AR	50	410	Y
	30	48213-10600	SHIM-WORM BEARING(0.050T)	AR		410	
*	31	48214-10602	SHIM-WORM BEARING(0.5T)	AR	10	410	Y
*	32	00911-24500	NUT TO FIX FRONT COVER	1	100	410	
*	33	00915-11500	WASHER-LOCK TO FIX FRONT COVER	3	50	410	
	34	00124-51810	BOLT TO FIX FRONT COVER	2		410	
	35	48035-04100	O RING-HOUSING COVER	1	10	410	
*	36	00911-24500	NUT TO FIX FLANGE	1	100	410	

Printed in Japan

REVISED: SEPTEMBER,1968

S	KEY NO.	PART NO.	PART NAME	Q'TY	SALES UNIT	MODEL	ICA
*	37	00915-11500	WASHER-LOCK TO FIX FLANGE	3	50	410	
	38	00124-51810	BOLT TO FIX FLANGE	2		410	
	39	48054-32200	ASSY-BUSHING,COLUMN JACKET	1	4	410	
	40	48025-04100	ASSY-BEARING,WORM	2	1	410	
	41	48100-10601	ASSY-SHAFT,ROCKER	1		410	
	42	48062-30800	PLUG-BALL ROLLER	1	50	410	
	43	48046-30800	RACE-NEEDLE ROLLER	1	5	410	
	44	48047-30800	COVER-NEEDLE ROLLER	1		410	
	45	48111-95960	SPACER-NEEDLE ROLLER	1		410	
	46	48105-30800	BALL-ROLLER(13.000M/M)	1		410	
	47	48106-30800	BALL-ROLLER(12.995M/M)	1		410	
	48	48107-30800	BALL-ROLLER(12.990M/M)	1		410	
	49	48108-95960	ROLLER-NEEDLE(2.541M/M)	38		410	
	50	48109-95960	ROLLER-NEEDLE(2.544M/M)	38		410	
	51	48110-95960	ROLLER-NEEDLE(2.547M/M)	38		410	
	52	48126-10600	WASHER-THRUST,ROCKER SHAFT	1	10	410	
	53	48125-10600	WASHER-THRUST,ROCKER SHAFT	1	50	410	
	54	48215-10600	BOLT TO MOUNT HOUSING	3	10	410	
*	55	00912-64700	NUT TO MOUNT HOUSING	3	50	410	
	56	48502-10650	ARM-STEERING GEAR(NO MARK)	1		R DRIVE 410	
	57	48502-10652	ARM-STEERING GEAR(YELLOW,1 LINE)	1		R DRIVE 410	

Printed in Japan

REVISED: SEPTEMBER,1968

S	KEY NO.	PART NO.	PART NAME	Q'TY	SALES UNIT	MODEL	ICA
	58	48502-10652	ARM-STEERING GEAR(YELLOW,2 LINE)	1		R DRIVE 410	
	59	48502-10850	ARM-STEERING GEAR(NO MARK)	1		L DRIVE 410	
	60	48502-10851	ARM-STEERING GEAR(YELLOW,1 LINE)	1		L DRIVE 410	
	61	48502-10852	ARM-STEERING GEAR(YELLOW,2 LINE)	1		L DRIVE 410	
	62	00911-05200	NUT TO FIX ARM	1	25	410	
	63	00921-44000	PIN-COTTER TO FIX ARM	1	50	410	
	64	00915-42200	WASHER-PLAIN TO FIX ARM	1		410	
	65	00916-12000	WASHER-LOCK TO FIX STEERING WHEEL	1	50	410	
	66	48405-30800	NUT TO FIX STEERING WHEEL	1	10	410	
	67	48418-30800	COLLAR TO FIX STEERING WHEEL	2	5	410	
	68	48419-30800	WIRE TO FIX STEERING WHEEL	1		410	
	69	68643-00800	BUMPER-COMPARTMENT LID	1	50	SS 410	

Printed in Japan

REVISED: SEPTEMBER,1968

NOTE

STEERING LINKAGE

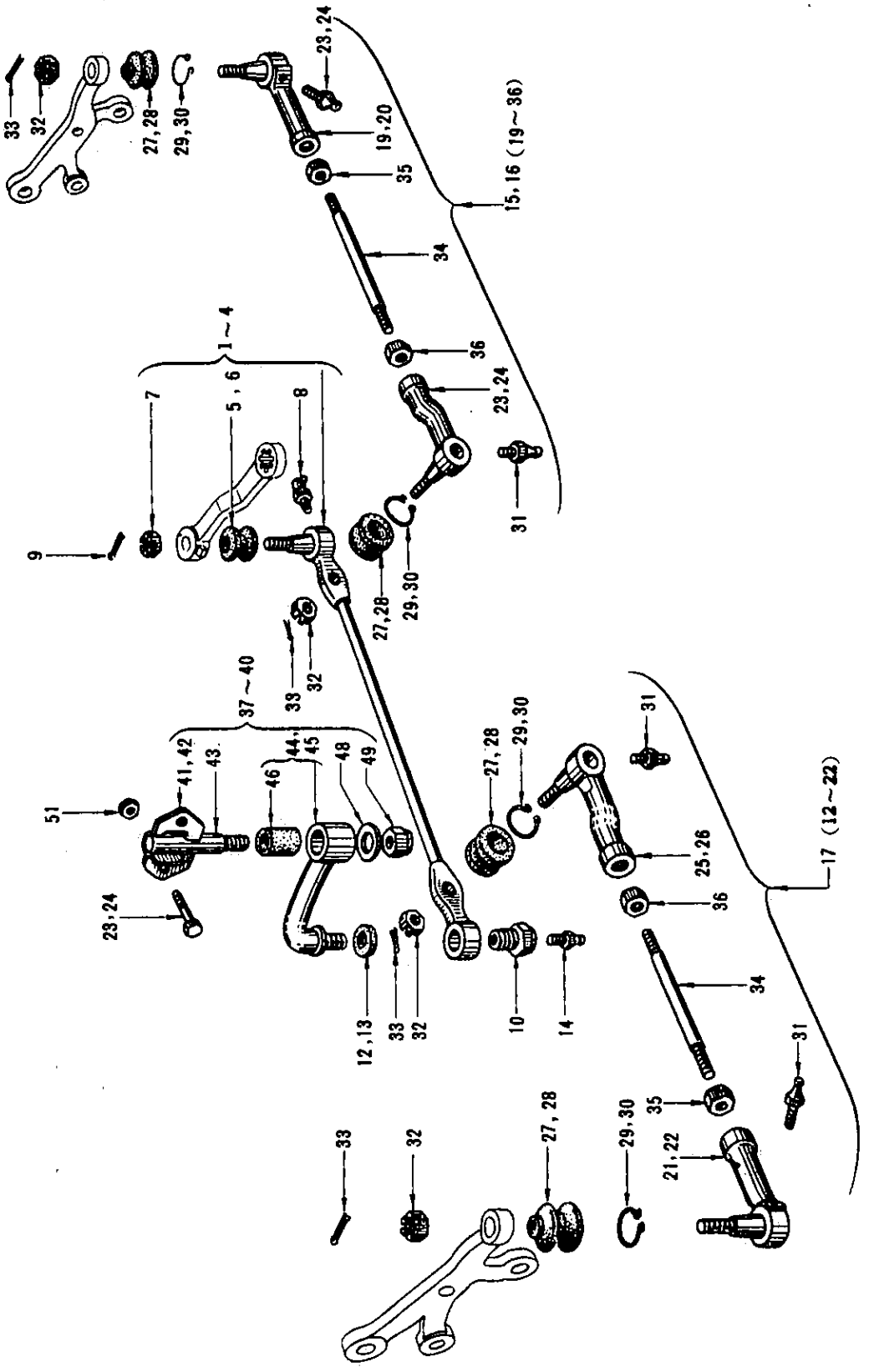

S	KEY NO.	PART NO.	PART NAME	Q'TY	SALES UNIT	MODEL	ICA
			STEERING LINKAGE				
	1	43560-16500	ASSY-ROD,CROSS	1		R DRIVE 410	
*	2	48560-13200	ASSY-ROD,CROSS(FROM SEPT.-64)	1		R DRIVE 410	Y
*	3	48560-10800	ASSY-ROD,CROSS	1	1	L DRIVE 410	
*	4	48560-13900	ASSY-ROD,CROSS(FROM SEPT.-64)	1	1	L DRIVE 410	Y
	5	48577-61000	SEAL-DUST,CROSS ROD SOCKET	1	10	410	
	6	48577-13200	SEAL-DUST,CROSS ROD SOCKET(FROM SEPT.-64)	1	10	410	N
	7	00911-04700	NUT TO FIX BALL STAD	1		410	
	8	00932-20200	NIPPLE-GREASE TO FIX BALL STAD	1	100	410	
	9	00921-32210	PIN-COTTER TO FIX BALL STAD	1		410	
	10	48581-13201	COMP.-BUSHING,THREADED	1		410	
	11	48581-13201	COMP.-BUSHING,THREADED (FROM SEPT.-64)	1	10	410	Y
*	12	48587-10600	SEAL-DUST,THREADED BUSH	1	10	410	
	13	48587-13200	SEAL-DUST,THREADED BUSH(FROM SEPT.-64)	1	10	410	Y
	14	00932-10200	NIPPLE-GREASE	1	100	410	
*	15	48510-10600	ASSY-ROD,SIDE(R.H.)	1		410	
*	16	48510-13200	ASSY-ROD,SIDE(R.H.)(FROM SEPT.-64)	1	1	410	Y
*	17	48630-10600	ASSY-ROD,SIDE(L.H.)	1		410	

Printed in Japan

REVISED: SEPTEMBER,1968

S	KEY NO.	PART NO.	PART NAME	QTY	SALES UNIT	MODEL	ICA
*	18	48630-13200	ASSY-ROD,SIDE(L.H.)(FROM SEPT.-64)	1	1	410	Y
*	19	48520-61000	ASSY-SOCKET,SIDE ROD,OUTER(R.H.)	1		410	
	20	48520-13200	ASSY-SOCKET,SIDE ROD,OUTER(R.H.)(FROM SEPT.-64)	1	1	410	Y
	21	48521-61000	ASSY-SOCKET,SIDE ROD,OUTER(L.H.)	1		410	
*	22	48640-13200	ASSY-SOCKET,SIDE ROD,OUTER(L.H.)(FROM SEPT.-64)	1	2	410	Y
*	23	48521-10600	ASSY-SOCKET,SIDE ROD,OUTER(L.H.)(FROM SEPT.-64)	1	2	410	
*	24	48521-13200	ASSY-SOCKET,SIDE ROD,INNER(R.H.)(FROM SEPT.-64)	1	1	410	Y
	25	48641-16500	ASSY-SOCKET,SIDE ROD,INNER(L.H.)	1		410	
	26	48641-16500	ASSY-SOCKET,SIDE ROD,INNER(L.H.)(FROM SEPT.-64)	1		410	Y
*	27	48522-04300	SEAL-DUST	4		410	
*	28	48522-13200	SEAL-DUST(FROM SEPT.-64)	4	10	410	Y
	29	48520-04100	CLAMP-DUST SEAL	4		410	
	30	48526-13200	CLAMP-DUST SEAL(FROM SEPT.-64)	4	5	410	Y
	31	00932-10200	NIPPLE-GREASE	4	100	410	
	32	00911-04700	NUT TO FIX BALL JOINT	4		410	
	33	00921-32210	PIN-COTTER TO FIX BALL JOINT	4		410	
	34	48512-10600	BAR-SIDE ROD	2	1	410	

Printed in Japan

REVISED: SEPTEMBER,1968

S	KEY NO.	PART NO.	PART NAME	QTY	SALES UNIT	MODEL	ICA
	35	00911-34910	NUT TO LOCK BALL JOINT TO BAR	2	100	410	
	36	48514-61000	NUT TO LOCK BALL JOINT TO BAR	2	10	410	
	37	48530-10600	ASSY-IDLER,WITH ARM	1		R DRIVE 410	
	38	48530-13201	ASSY-IDLER,WITH ARM(FROM SEPT.-64)	1	1	R DRIVE 410	Y
*	39	48530-10800	ASSY-IDLER,WITH ARM	1	1	L DRIVE 410	
	40	48530-13901	ASSY-IDLER,WITH ARM(FROM SEPT.-64)	1	1	L DRIVE 410	Y
*	41	48531-10600	ASSY-BODY,IDLER (NOT FOR SALE)	1		R DRIVE 410	
*	42	48531-10800	ASSY-BODY,IDLER	1	1	L DRIVE 410	
*	43	48532-10600	ASSY-SHAFT,IDLER (NOT FOR SALE)	1		410	
	44	48550-10600	ASSY-ARM,IDLER	1	1	410	
*	45	48550-13200	ASSY-ARM,IDLER (FROM SEPT-64) (NOT FOR SALE)	1		410	Y
*	46	48544-10600	BUSHING-IDLER ARM (NOT FOR SALE)	1		410	
*	47	48545-10600	COLLAR-IDLER ARM (NOT FOR SALE)	1		410	
	48	48541-10600	WASHER-IDLER ARM	1		410	
	49	00912-64800	NUT	1	1	410	
	50	00124-76510	BOLT TO FIX IDLER TO BODY	2	10	410	
*	51	00912-64700	NUT TO FIX IDLER TO BODY	2	50	410	

Printed in Japan

REVISED: SEPTEMBER,1968

NOTE

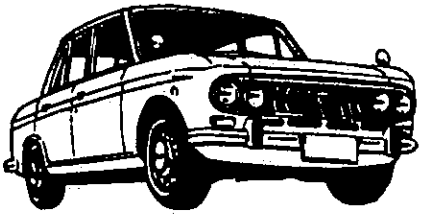

NOTE

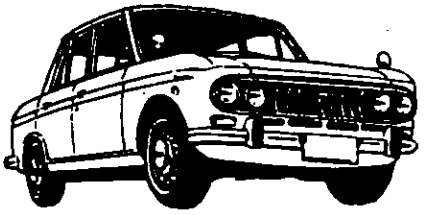

FRONT OUTSIDE VIEW

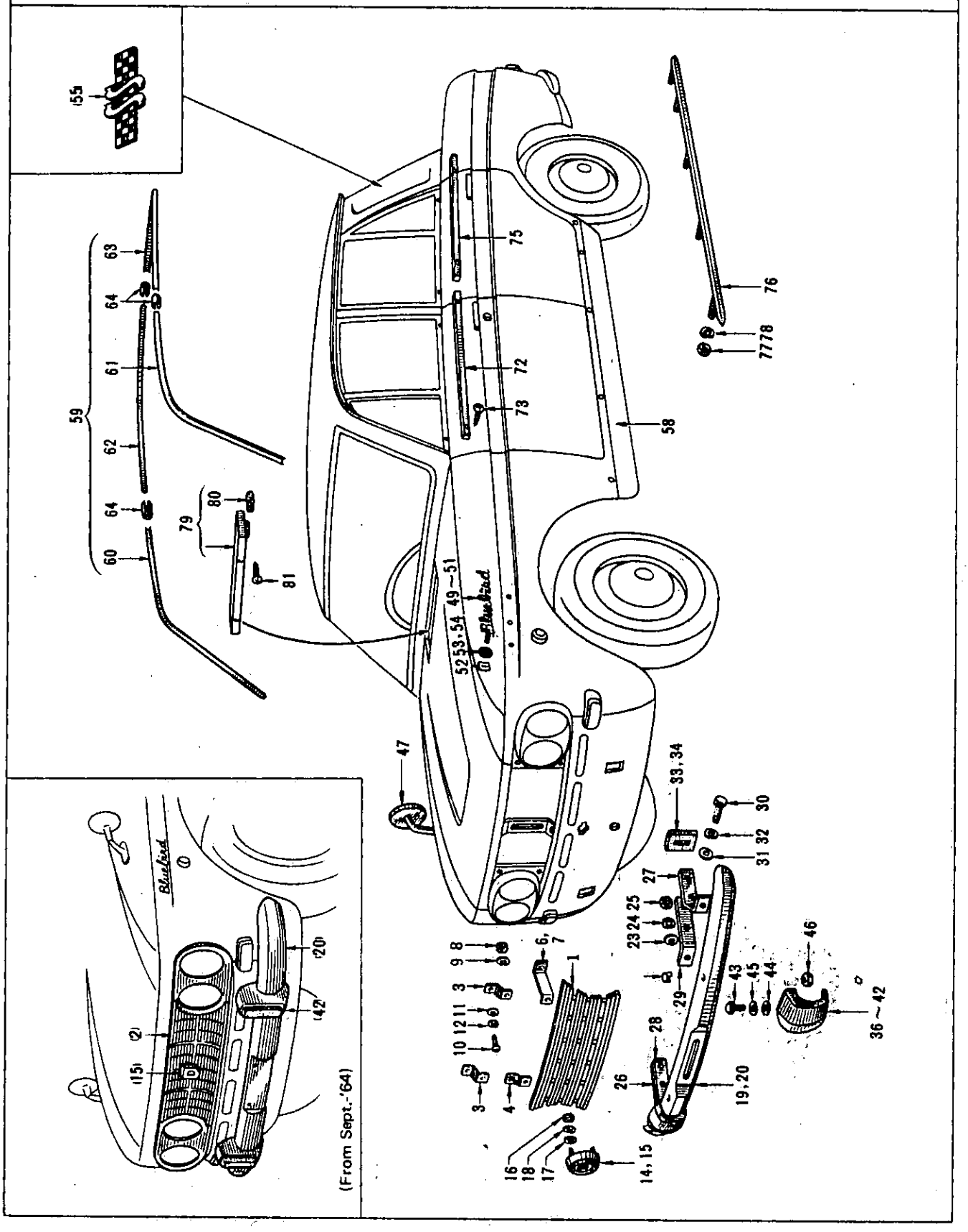

FRONT OUTSIDE VIEW

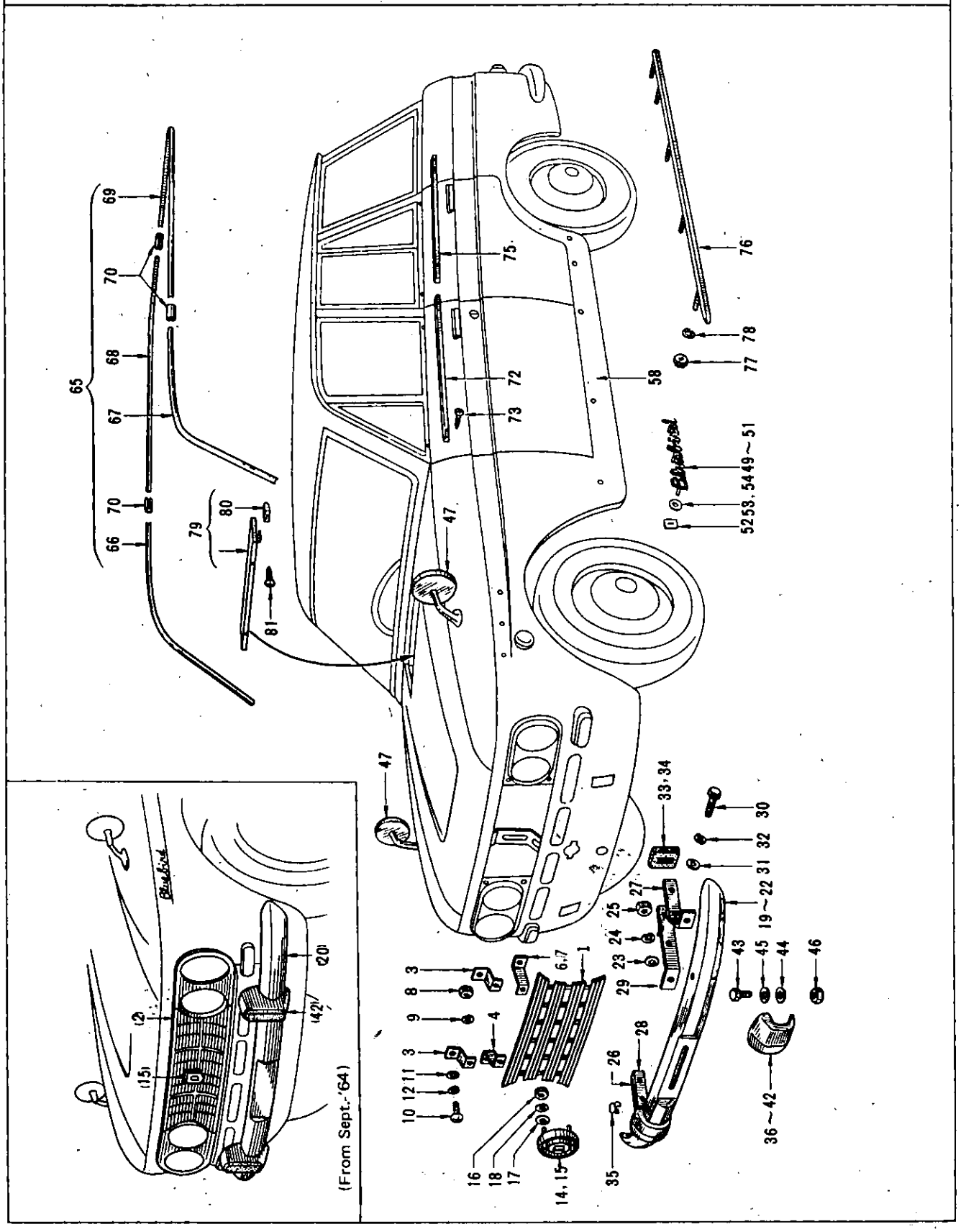

SEPTEMBER, 1968

Printed in Japan

S	KEY NO.	PART NO.	PART NAME	Q'TY	SALES UNIT	MODEL	ICA
			FRONT OUTSIDE VIEW				
	1	62303-10601	GRILLE-RADIATOR	1		410	
*	2	62303-13200	ASSY-GRILLE,RADIATOR(FROM SEPT.-64)	1		410	N
	3	62329-10600	BRACKET-RADIATOR GRILLE,UPPER(UP TO SEPT.-64)	2		410	
	4	62330-10600	BRACKET-RADIATOR GRILLE,LOWER(R.H.)	1	5	410	
	5	62330-13200	BRACKET-RADIATOR GRILLE,LOWER(R.H.)(FROM SEPT.-64)	1	2	410	N
	6	62331-10600	BRACKET-RADIATOR GRILLE,LOWER(L.H.)	1		410	
	7	62331-13200	BRACKET-RADIATOR GRILLE,LOWER(L.H.)(FROM SEPT.-64)	1	1	410	N
	8	00911-14010	NUT TO FIX RADIATOR GRILLE	4		410	
	9	00915-11010	WASHER-LOCK TO FIX RADIATOR GRILLE	4	100	410	
	10	00314-41210	SCREW TO FIX BRACKET	4	50	410	
	11	00915-41410	WASHER-PLAIN TO FIX BRACKET	4		410	
	12	00915-11410	WASHER-LOCK TO FIX BRACKET	2		410	
	13	62332-13200	WASHER-VINYL(FROM SEPT.-64)	2	1	410	
	14	62800-11400	ASSY-EMBLEM,RADIATOR GRILLE	1	2	410	
	15	62800-13200	ASSY-EMBLEM,RADIATOR GRILLE(FROM SEPT.-64)	1	2	410	N

Printed in Japan

REVISED: SEPTEMBER,1968

S	KEY NO.	PART NO.	PART NAME	Q'TY	SALES UNIT	MODEL	ICA
	16	00911-10810	NUT TO FIX EMBLEM	2	50	410	
	17	00915-40810	WASHER-PLAIN TO FIX EMBLEM	2		410	
	18	00915-10810	WASHER-LOCK TO FIX EMBLEM	2		410	
*	19	62650-10650	ASSY-BUMPER,FRONT	1		R DRIVE 410	
	20	62650-13200	ASSY-BUMPER,FRONT	1		R DRIVE 410	Y
*	21	62650-10850	ASSY-BUMPER,FRONT	1		L DRIVE 410	
	22	62650-13900	ASSY-BUMPER,FRONT	1		L DRIVE 410	N
	23	00915-51610	WASHER-PLAIN TO FIX BUMPER TO STAY	4		410	
	24	00915-11610	WASHER-LOCK TO FIX BUMPER TO STAY	4		410	
	25	00911-14610	NUT TO FIX BUMPER TO STAY	4		410	
*	26	62671-10600	STAY-FRONT BUMPER,OUTER(R.H.)	1	2	410	
*	27	62672-10600	STAY-FRONT BUMPER,OUTER(L.H.)	1	1	410	
*	28	62673-10600	STAY-FRONT BUMPER,INNER(R.H.)	1		410	
*	29	62674-10600	STAY-FRONT BUMPER,INNER(L.H.)	1		410	
	30	00154-83510	BOLT TO FIX STAY TO SIDE MEMBER	4	100	410	
	31	00915-51810	WASHER-PLAIN TO FIX STAY TO SIDE MEMBER	4		410	
	32	00915-11810	WASHER-LOCK TO FIX STAY TO SIDE MEMBER	4	50	410	
*	33	62675-10601	RUBBER-SEALING,FRONT BUMPER STAY	2	5	410	

Printed in Japan

REVISED: SEPTEMBER,1968

S	KEY NO.	PART NO.	PART NAME	QTY	SALES UNIT	MODEL	ICA
	34	62675-10602	RUBBER-SEALING,FRONT BUMPER STAY	2		410	Y
	35	62672-36700	PLUG-FOG LAMP HOLE	2	10	410(EXC.D TYPE)	
	36	62663-11400	OVERRIDER-BUMPER	2		R DRIVE & WAGON 410	
	37	62663-10800	OVERRIDER-BUMPER,FRONT (R.H.)	1	2	L DRIVE 410	
	38	62665-13600	OVERRIDER-BUMPER,BODY FRONT RH(FROM 64-SEP)	1		410	Y
	39	62670-13600	OVERRIDER-BUMPER,RUBBER FRONT RH(FROM 64-SEP)	1	1	L DRIVE 410	Y
	40	62665-10800	OVERRIDER-BUMPER,FRONT LH	1		L DRIVE 410	C
	41	62666-13600	OVERRIDER-BUMPER BODY FRONT LH(FROM 64-SEP)	1		410	Y
	42	62670-13600	OVERRIDER-BUMPER,RUBBER FRONT LH(FROM 64-SEP)	1		410	Y
	43	00114-52010	BOLT TO FIX OVERRIDER	4		410	
	44	00915-41510	WASHER-PLAIN TO FIX OVERRIDER	4		410	
	45	00915-11510	WASHER-LOCK TO FIX OVERRIDER	4		410	
	46	00911-14510	NUT TO FIX OVERRIDER	4		410	
	47	96301-10600	MIRROR-BACK,OUTSIDE	2	1	410(EXC.A.B.TYPE)	
	48	96301-13200	ASSY-BACK MIRROR,OUTSIDE(FROM SEPT.-64)	2	1	410	Y
	49	63806-11401	EMBLEM-BODY SIDE(BLUEBIRD)	2	2	410	
	50	63806-10800	EMBLEM-BODY SIDE(DATSUN)	2	2	410	

Printed in Japan

REVISED: SEPTEMBER,1968

S	KEY NO.	PART NO.	PART NAME	Q'TY	SALES UNIT	MODEL	ICA
	51	63806-10801	EMBLEM-BODY SIDE(NISMO)	2	2	410	
	52	00918-11000	NUT-SPIRE TO FIX BODY SIDE EMBLEM	6		410	
	53	97331-32200	WASHER-VINYL TO FIX BODY SIDE EMBLEM	6	1	410	
	54	76882-12410	MARK-SS(R.H.)	1	1	SS 410	
	55	76883-12410	MARK-SS(L.H.)	1	1	SS 410	
	56	97331-32200	WASHER-VINYL	1	1	SS 410	
	57	76400-10630	ASSY-SILL,BODY(R.H.)	1		410	
	58	76401-10630	ASSY-SILL,BODY(L.H.)	1		410	
	59	73810-11400	SET-MOULDING,ROOF DRIP	1	1	SEDAN 410	
	60	73811-11400	MOULDING-ROOF DRIP,FRONT(R.H.)	1	1	SEDAN 410	
	61	73812-11400	MOULDING-ROOF DRIP,FRONT(L.H.)	1	1	SEDAN 410	
	62	73813-11400	MOULDING-ROOF DRIP,REAR(R.H.)	1	1	SEDAN 410	
	63	73814-11400	MOULDING-ROOF DRIP,REAR(L.H.)	1	10	SEDAN 410	
	64	73815-11400	CLIP-MOULDING,ROOF DRIP	3	20	SEDAN 410	
	65	73810-10900	SET-MOULDING,ROOF DRIP	1	1	WAGON 410	
	66	73811-10600	MOULDING-ROOF DRIP(R.H.)	1		WAGON 410	
	67	73812-10600	MOULDING-ROOF DRIP(L.H.)	1		WAGON 410	
	68	73813-10900	MOULDING-ROOF DRIP,REAR(R.H.)	1	1	WAGON 410	
	69	73814-10900	MOULDING-ROOF DRIP,REAR(L.H.)	1	1	WAGON 410	
	70	73815-10600	CLIP-MOULDING,ROOF DRIP	3		WAGON 410	

Printed in Japan

REVISED: SEPTEMBER,1968

S	KEY NO.	PART NO.	PART NAME	Q'TY	SALES UNIT	MODEL	ICA
	71	80970-10600	MOULDING-FRONT DOOR OUTSIDE(R.H.)	1	1	410	
	72	80971-10600	MOULDING-FRONT DOOR OUTSIDE(L.H.)	1	1	410	
	73	80972-10600	SCREW(TO FIX DOOR MOULDING)	8		410	
	74	82970-10600	MOULDING-REAR DOOR,OUTSIDE(R.H.)	1	2	410	
	75	82971-10600	MOULDING-REAR DOOR,OUTSIDE(L.H.)	1	1	410	
	76	76482-10651	SET-MOULDING,BODY SILL (FROM C/# SEE FIG 75)	2	1	410	N
	77	00911-14410	NUT TO FIX BODY SILL MOULDING	4		410	
	78	00915-11410	WASHER-LOCK TO FIX BODY SILL MOULDING	4		410	
	79	66330-10650	ASSY-GRILLE,COWL TOP	1	1	410	
	80	66312-10600	CAP-COWL GRILLE CLIP	2	10	410	
	81	00511-01010	SCREW	2	50	410	

Printed in Japan

REVISED: SEPTEMBER,1968

NOTE

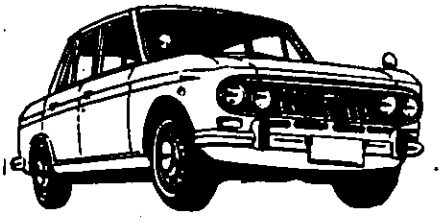

FRONT FENDER & HOOD PANEL

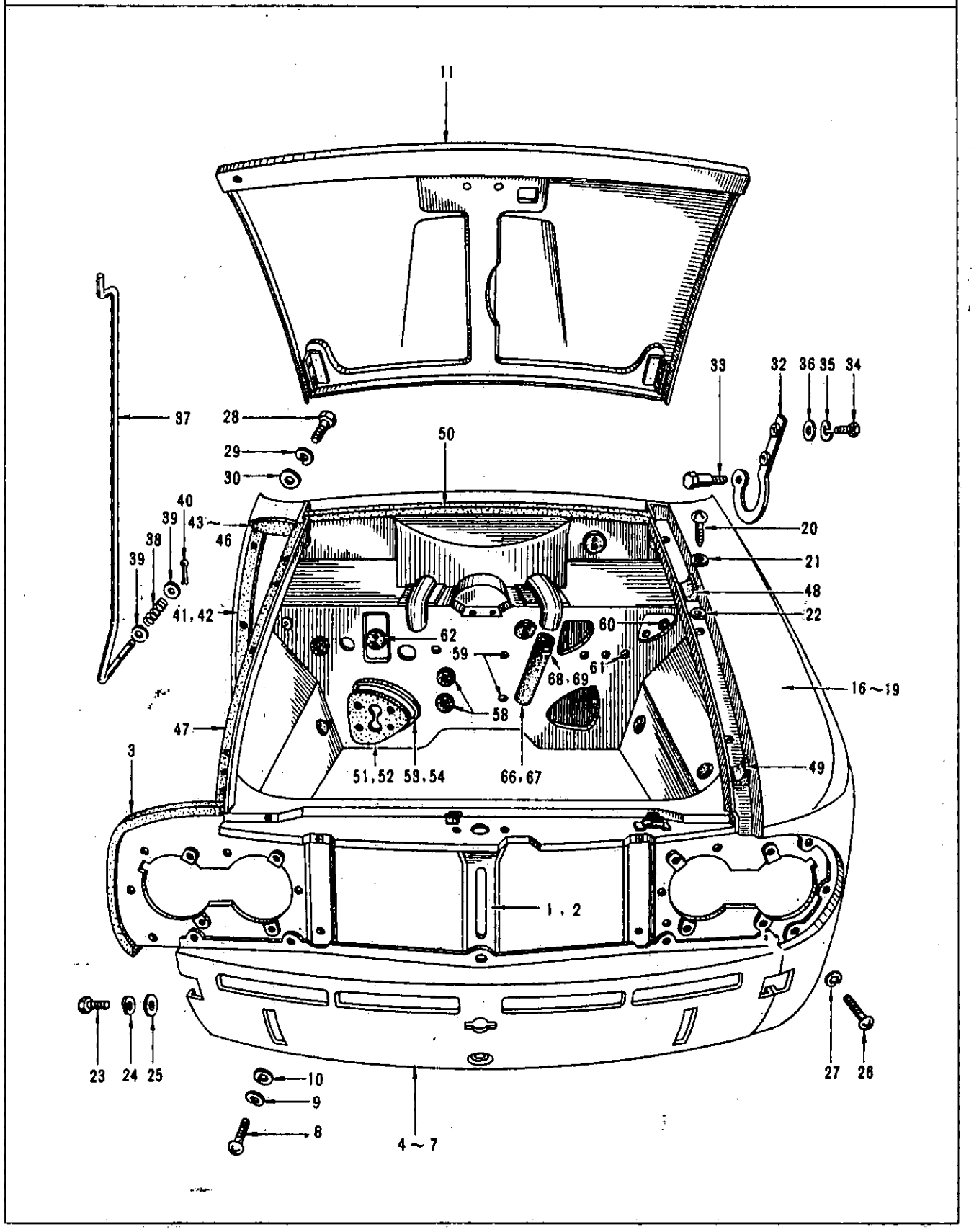

S	KEY NO.	PART NO.	PART NAME	Q'TY	SALES UNIT	MODEL	ICA
			FRONT FENDER & HOOD PANEL				
*	1	62500-10630	ASSY-PANEL,FRONT	1		R DRIVE 410	
*	2	62500-10830	ASSY-PANEL,FRONT	1	1	L DRIVE 410	
*	3	62811-10600	RUBBER-SEALING,FRONT PANEL	1	2	410	
*	4	62602-10630	ASSY-PANEL,FRONT APRON	1		R DRIVE 410	
	5	62604-13231	ASSY-PANEL,FRONT APRON (FROM SEPT.-64)	1		R DRIVE 410	Y
*	6	62602-10830	ASSY-PANEL,FRONT APRON	1		L DRIVE 410	
*	7	62602-13930	ASSY-PANEL,FRONT APRON (FROM SEPT.-64)	1	1	L DRIVE 410	Y
	8	00114-41610	BOLT TO FIX FRONT APRON TO FRONT MAIN PANEL	8	50	410	
	9	00915-11410	WASHER-LOCK TO FIX FRONT APRON TO FRONT MAIN PANEL	8		410	
	10	00915-41410	WASHER-PLAIN TO FIX FRONT APRON TO FRONT MAIN PANEL	8		410	
*	11	65100-10630	ASSY-PANEL,HOOD	1	1	410	
	12	63100-10630	ASSY-FENDER,FRONT(R.H.)	1	2	R DRIVE 410	
	13	63100-10631	ASSY-FENDER,FRONT(R.H.)	1		R DRIVE 410	N
	14	63100-10830	ASSY-FENDER,FRONT(R.H.)	1		L DRIVE 410	
	15	63100-10832	ASSY-FENDER,FRONT(R.H.)	1		L DRIVE 410	N

Printed in Japan

REVISED: SEPTEMBER,1968

S	KEY NO.	PART NO.	PART NAME	Q'TY	SALES UNIT	MODEL	ICA
	16	63101-10630	ASSY-FENDER,FRONT(L.H.)	1	2	R DRIVE 410	
	17	63101-10631	ASSY-FENDER,FRONT(L.H.)	1		R DRIVE 410	N
	18	63101-10830	ASSY-FENDER,FRONT(L.H.)	1		L DRIVE 410	
	19	63101-10834	ASSY-FENDER,FRONT(L.H.)	1		L DRIVE 410	N
	20	00344-51610	SCREW TO FIX FENDER TO HOOD LEDGE	6		410	
	21	00915-11510	WASHER-LOCK TO FIX FENDER TO HOOD LEDGE	6		410	
	22	00915-41510	WASHER-PLAIN TO FIX FENDER TO HOOD LEDGE	6		410	
	23	00114-51610	BOLT TO FIX FENDER TO FRONT APRON	4		410	
	24	00915-11510	WASHER-LOCK TO FIX FENDER TO FRONT APRON	4		410	
	25	00915-41510	WASHER-PLAIN TO FIX FENDER TO FRONT APRON	4		410	
	26	00314-41610	BOLT TO FIX FENDER TO FRONT PANEL	8	50	410	
	27	00915-11410	WASHER-LOCK TO FIX FENDER TO FRONT PANEL	8		410	
	28	00114-52010	BOLT TO FIX FENDER TO FRONT PILLAR	8		410	
	29	00915-11510	WASHER-LOCK TO FIX FENDER TO FRONT PILLAR	8		410	
	30	00915-41510	WASHER-PLAIN TO FIX FENDER TO FRONT PILLAR	8		410	
	31	65405-10600	HINGE-HOOD(R.H.)	1	10	410	
	32	65406-10600	HINGE-HOOD(L.H.)	1	10	410	
	33	65409-10600	PIN-HOOD HINGE	2	10	410	
	34	00114-41610	BOLT TO FIX HOOD HINGE	4	50	410	

Printed in Japan

REVISED: SEPTEMBER,1968

S	KEY NO.	PART NO.	PART NAME	QTY	SALES UNIT	MODEL	ICA
	35	00915-11410	WASHER-LOCK TO FIX HOOD HINGE	4		410	
	36	00915-41410	WASHER-PLAIN TO FIX HOOD HINGE	4		410	
	37	65710-10601	ROD-HOOD SUPPORT	1	1	410	
*	38	65715-10600	SPRING-HOOD SUPPORT	1		410	
	39	65716-10600	WASHER-SPECIAL	2		410	
	40	00921-01510	PIN-COTTER	1	50	410	
*	41	63145-10600	RUBBER-FRONT FENDER,REAR	2	2	410	
	42	63145-10601	RUBBER-FRONT FENDER,REAR	2	10	410	Y
*	43	63146-10600	RUBBER-FRONT FENDER,UPPER(R.H.)	1	5	410	
	44	63146-10601	RUBBER-FRONT FENDER,UPPER(R.H.)	1	1	410	Y
*	45	63147-10600	RUBBER-FRONT FENDER,UPPER(L.H.)	1	10	410	
	46	63147-10601	RUBBER-FRONT FENDER,UPPER(L.H.)	1	5	410	Y
	47	63148-10600	RUBBER-FRONT FENDER,SIDE	2		410	
*	48	65157-10600	BUMPER-HOOD	2		410	
	49	65158-10600	BUMPER-HOOD SIDE	2	10	410	
	50	67853-10600	RUBBER-SEALING,HOOD REAR	1	1	410	
	51	67811-10600	GROMMET-STEERING COLUMN	1	1	R DRIVE 410	
	52	67811-10800	GROMMET-STEERING COLUMN	1	1	L DRIVE 410	
	53	67812-10600	COVER-STEERING COLUMN GROMMET	1	1	R DRIVE 410	

Printed in Japan

REVISED: SEPTEMBER,1968

S	KEY NO.	PART NO.	PART NAME	Q'TY	SALES UNIT	MODEL	ICA
	54	67812-10800	COVER-STEERING COLUMN GROMMET	1	1	L DRIVE 410	
	55	67813-12400	PLUG-GROMMET,STEERING POST	1	5	4 SPEED,SS 410	
	56	00114-41610	BOLT TO FIX GROMMET	4	50	410	
	57	00915-41410	WASHER-PLAIN TO FIX GROMMET	4		410	
	58	67831-32200	PLUG-WATER PIPE HOLE,ROOM HEATER	2		U.L.LU.WL.UN.LN.LUN.410	
	59	66174-01500	PLUG-RUBBER(7)	7		U.L.LU.WL.UN.LN.LUN.410	
	60	67875-10600	PLUG-RUBBER(15)	1	1	410	
	61	67874-10600	PLUG-RUBBER,SERVOMOTOR HOLE(9)	1	10	P CLUTCH 410	
	62	67132-36720	COVER-CYLINDER HOLE	1		R DRIVE A CLUTCH 410	
*	63	67130-12100	ASSY-COVER,CYLINDER HOLE	1		L DRIVE A CLUTCH 410	
	64	00915-11510	WASHER-LOCK	2		R DRIVE A CLUTCH 410	
	65	00911-14510	NUT	2		R DRIVE A CLUTCH 410	
>	66	27167-10601	HOSE-DRAIN,AIR BOX(BHR 11A,3.5T)	2	5	410	
	67	27167-10602	HOSE-DRAIN,AIR BOX(NR 610,3.0T)	2	5	410	Y
	68	21504-30050	CLAMP-HOSE	2		3 SPEED 410	
	69	67815-12400	CLAMP-DRAIN,HOSE	1	1	4 SPEED,SS 410	
	70	27363-04100	GROMMET-WATER PIPE,ROOM HEATER	2	10	U.L.LU.WL.LN.LUN.410	

Printed in Japan

REVISED: SEPTEMBER,1968

NOTE

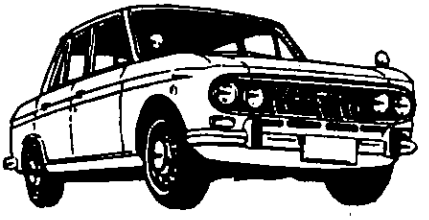

HOOD LOCK CONTROL

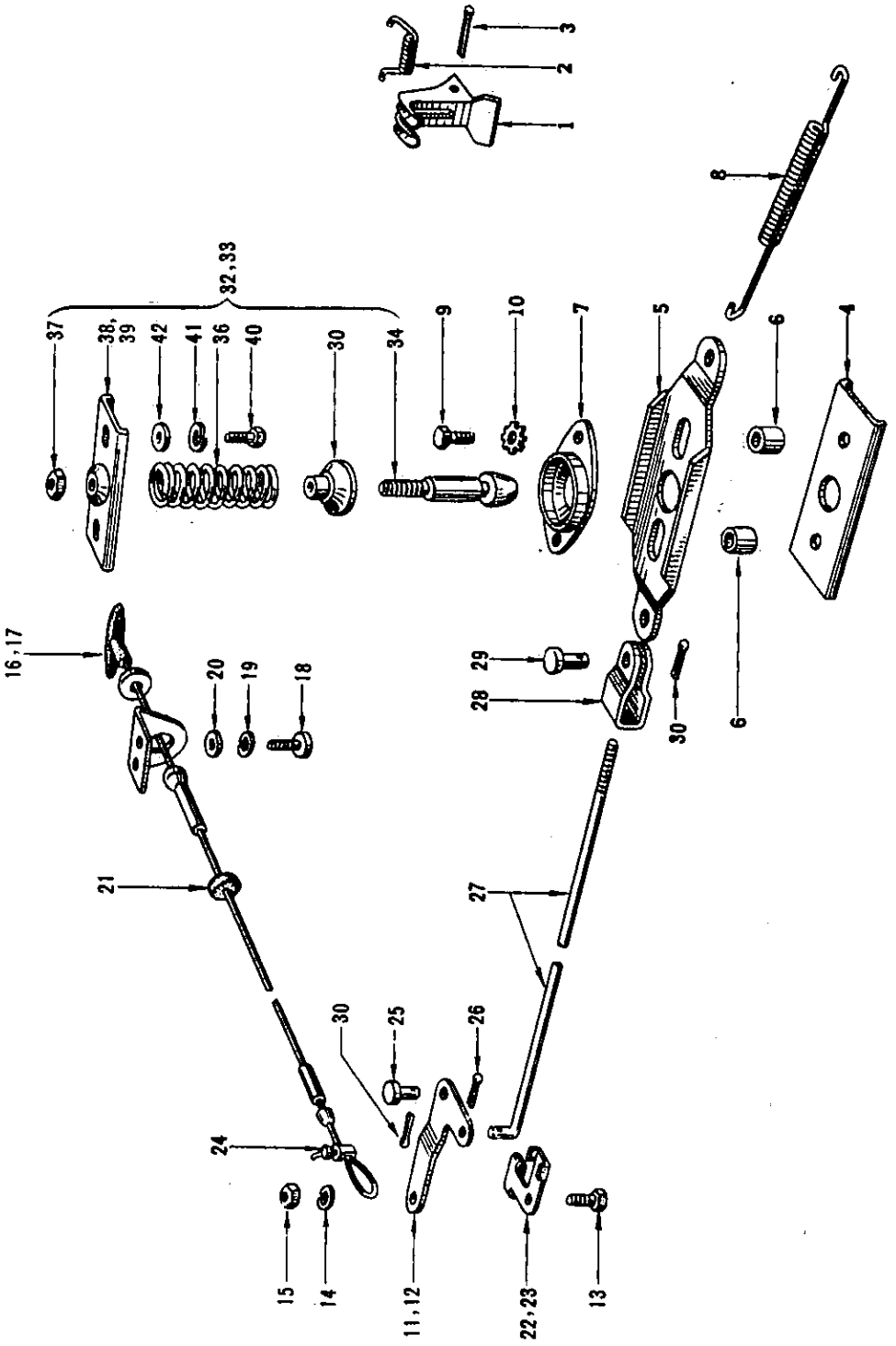

S	KEY NO.	PART NO.	PART NAME	QTY	SALES UNIT	MODEL	ICA
			HOOD LOCK CONTROL				
	1	65642-10600	HOOK-SAFETY CATCH	1	1	410	
	2	65644-26260	SPRING-SAFETY CATCH HOOK	1	10	410	
	3	00921-43510	PIN-COTTER	1	50	410	
	4	65618-04100	ASSY-BODY,HOOD LOCK	1	5	410	
	5	65621-04100	LEVER-HOOD LOCK	1		410	
	6	65628-26260	COLLAR-LEVER	2	100	410	
	7	65630-01300	PLATE-GUIDE,DOVETAIL BOLT	1	1	410	
	8	65622-10600	SPRING-HOOD LOCK LEVER	1	5	410	
	9	00114-42510	BOLT	2	50	410	
	10	00916-31410	WASHER	2	50	410	
	11	65658-10601	BELL CRANK-HOOD LOCK	1	1	R DRIVE 410	
	12	65658-10800	BELL CRANK-HOOD LOCK	1	10	L DRIVE 410	
	13	00114-51610	BOLT	1		410	
	14	00915-11510	WASHER-LOCK	1		410	
	15	00911-14510	NUT	1		410	
	16	65640-10600	ASSY-CABLE,HOOD LOCK CONTROL	1	5	410	
	17	65640-13200	ASSY-CABLE,HOOD LOCK CONTROL(FROM 64-9)	1	5	410	N
	18	00314-41410	SCREW	2	50	410	
	19	00915-11410	WASHER-LOCK	2		410	
	20	00915-41410	WASHER-PLAIN	2		410	

Printed in Japan

REVISED: SEPTEMBER,1968

S	KEY NO.	PART NO.	PART NAME	Q'TY	SALES UNIT	MODEL	ICA
	21	24050-27160	INSULATOR-RUBBER	1		410	
	22	65666-10600	CLIP-HOOD LOCK CONTROL CABLE	1	5	R DRIVE 410	
	23	65666-10800	CLIP-HOOD LOCK CONTROL CABLE	1	1	L DRIVE 410	
	24	65663-30001	COMP.-CLAMP,CABLE	1	10	410	
	25	65659-04100	RIVET-BELL CRANK	1	5	410	
	26	00921-11210	PIN-COTTER	1		410	
	27	65660-10600	ROD-HOOD LOCK TO BELL CRANK	1	5	410	
	28	65662-04100	CLAMP-HOOD LOCK LEVER	1	100	410	
	29	65663-04100	PIN-HOOD LOCK LEVER	1	10	410	
	30	00921-11210	PIN-COTTER	2		410	
	31	65649-10600	ASSY-HANDLE,HOOD CONTROL	1	5	L DRIVE 410	
	32	65601-10600	ASSY-LOCK,HOOD MALE	1		410	
	33	65601-10600	ASSY-LOCK,HOOD MALE	1	2	410	Y
	34	65604-04101	BOLT-DOVETAIL,HOOD LOCK	1		410	
	35	65605-01300	RETAINER-LIFT SPRING	1		410	
	36	65608-26260	SPRING-LIFT,HOOD LOCK	1	5	410	
	37	00911-14610	NUT	1		410	
	38	65609-04100	ASSY-SEAT,DOVETAIL BOLT	1		410	
	39	65609-10600	ASSY-SEAT,DOVETAIL BOLT	1	5	410	Y
	40	00114-41610	BOLT TO FIX DOVETAIL BOLT SEAT	2	50	410	
	41	00915-11410	WASHER-LOCK TO FIX DOVETAIL BOLT SEAT	2		410	

Printed in Japan

REVISED: SEPTEMBER,1968

S	KEY NO.	PART NO.	PART NAME	Q'TY	SALES UNIT	MODEL	ICA
	42	00915-41410	WASHER-PLAIN TO FIX DO VETAIL BOLT SEAT	2		410	

Printed in Japan

REVISED: SEPTEMBER,1968

NOTE

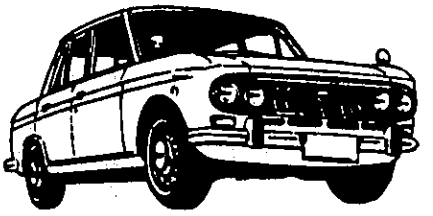

NOTE

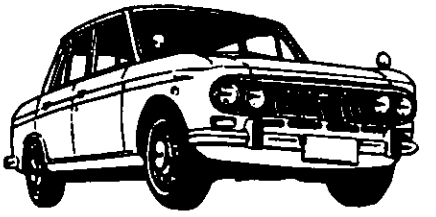

WINDSHIELD GLASS

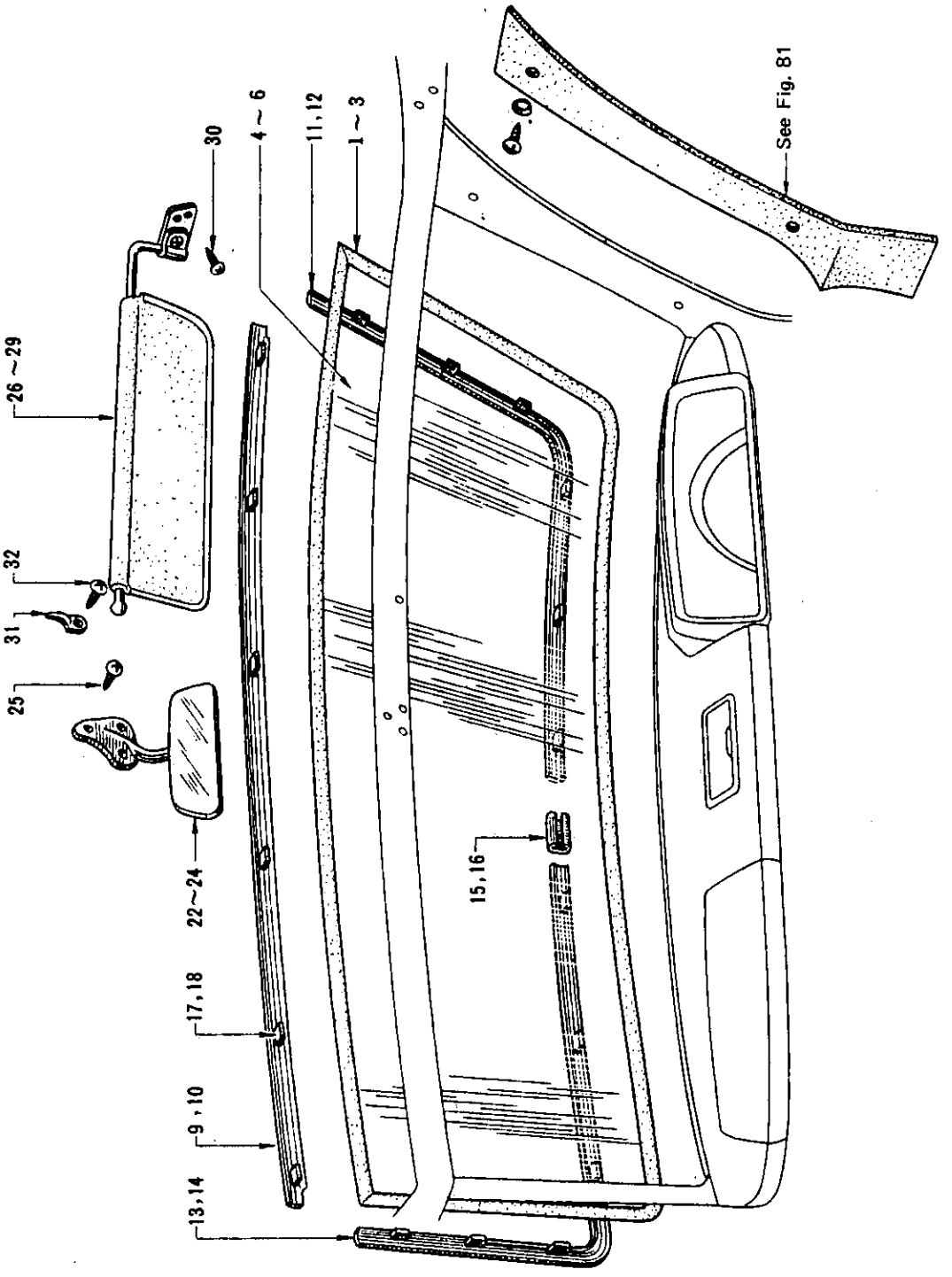

S	KEY NO.	PART NO.	PART NAME	Q'TY	SALES UNIT	MODEL	ICA
			WINDSHIELD GLASS				
	1	72610-10600	WEATHERSTRIP-WINDSHIELD	1	1	410 A TYPE	
	2	72610-11400	WEATHERSTRIP-WINDSHIELD	1	1	410(EXC.A TYPE)	
	3	72610-13600	WEATHERSTRIP-WINDSHIELD(FROM SEPT.-64)	1	1	410(EXC.A TYPE)	N
	4	72613-10800	GLASS-WINDSHIELD(SPECIALLY TOUGHENED)	1		410 A TYPE	
	5	72613-10801	GLASS-WINDSHIELD(SPECIALLY TOUGHENED,ANTI-SUN)	1		410 B.D. TYPE	
	6	72613-11400	GLASS-WINDSHIELD(TOUGHENED,ANTI-SUN)	1		R DRIVE 410 WAGON	
	7	72810-11400	SET-MOULDING,WINDSHIELD	1		410	
	8	72810-13600	SET-MOULDING,WINDSHIED (FROM SEPT.-64)	1		410	N
	9	72811-11400	MOULDING-WINDSHIELD(TOP)	1		410	
	10	72811-13600	MOULDING-WINDSHIELD(TOP)(FROM SEPT.-64)	1	1	410	N
	11	72812-11400	MOULDING-WINDSHIELD,SIDE(R.H.)	1	10	410	
	12	72812-13600	MOULDING-WINDSHIELD,SIDE(R.H.)(FROM SEPT.-64)	1	1	410	N
	13	72813-11400	MOULDING-WINDSHIELD,SIDE(L.H.)	1		410	
	14	72813-13600	MOULDING-WINDSHIELD,SIDE(L.H.)(FROM SEPT.-64)	1	1	410	N
	15	72816-11400	CLIP-MOULDING	1	10	410	

Printed in Japan

REVISED: SEPTEMBER,1968

S	KEY NO.	PART NO.	PART NAME	Q'TY	SALES UNIT	MODEL	ICA
	16	72814-13600	CLIP-MOULDING,WINDSHIELD	6	10	410	N
*	17	72819-11400	CLIP-MOULDING,INSIDE	17		410	
	18	72819-11401	CLIP-MOULDING,INSIDE	17	1	410	Y
	19	72815-13600	CORNER-MOULDING(R.H.)(FROM SEPT.-64)	1		410	
	20	72816-13600	CORNER-MOULDING(L.H.)(FROM SEPT.-64)	1		410	
	21	96321-10600	ASSY-MIRROR,BACK,INSIDE	1		SEDAN 410	
*	22	96321-10901	ASSY-MIRROR,BACK,INSIDE	1		410	Y
*	23	96321-10900	ASSY-MIRROR,BACK,INSIDE	1		WAGON 410	
*	24	96321-10901	ASSY-MIRROR,BACK,INSIDE	1		410	Y
*	25	00334-01220	SCREW	3	50	410	
	26	96400-10600	ASSY-SUN VISOR	1		410 A.B TYPE	
	27	96400-10800	ASSY-SUN VISOR	1	1	410 A.B TYPE	
*	28	96400-11400	ASSY-SUN VISOR	1	1	410 D TYPE	
*	29	96401-11400	ASSY-SUN VISOR	1		410 D TYPE	
	30	00434-01620	SCREW	AR	50	410	
*	31	96409-10600	HOLDER-SUN VISOR	AR	10	410	
	32	00531-01610	SCREW	AR		410	
*	33	79713-10800	GLASS-BACK WINDOW(SPECIALLY TOUGHENED)	1		410 SEDAN A TYPE	
*	34	79713-10801	GLASS-BACK WINDOW(SPECIALLY TOUGHENED,ANTI-SUN)	1		410 SEDAN B.D.TYPE	

Printed in Japan

REVISED: SEPTEMBER,1968

NOTE

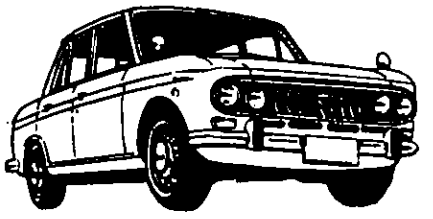

INSTRUMENT PANEL & FITTING

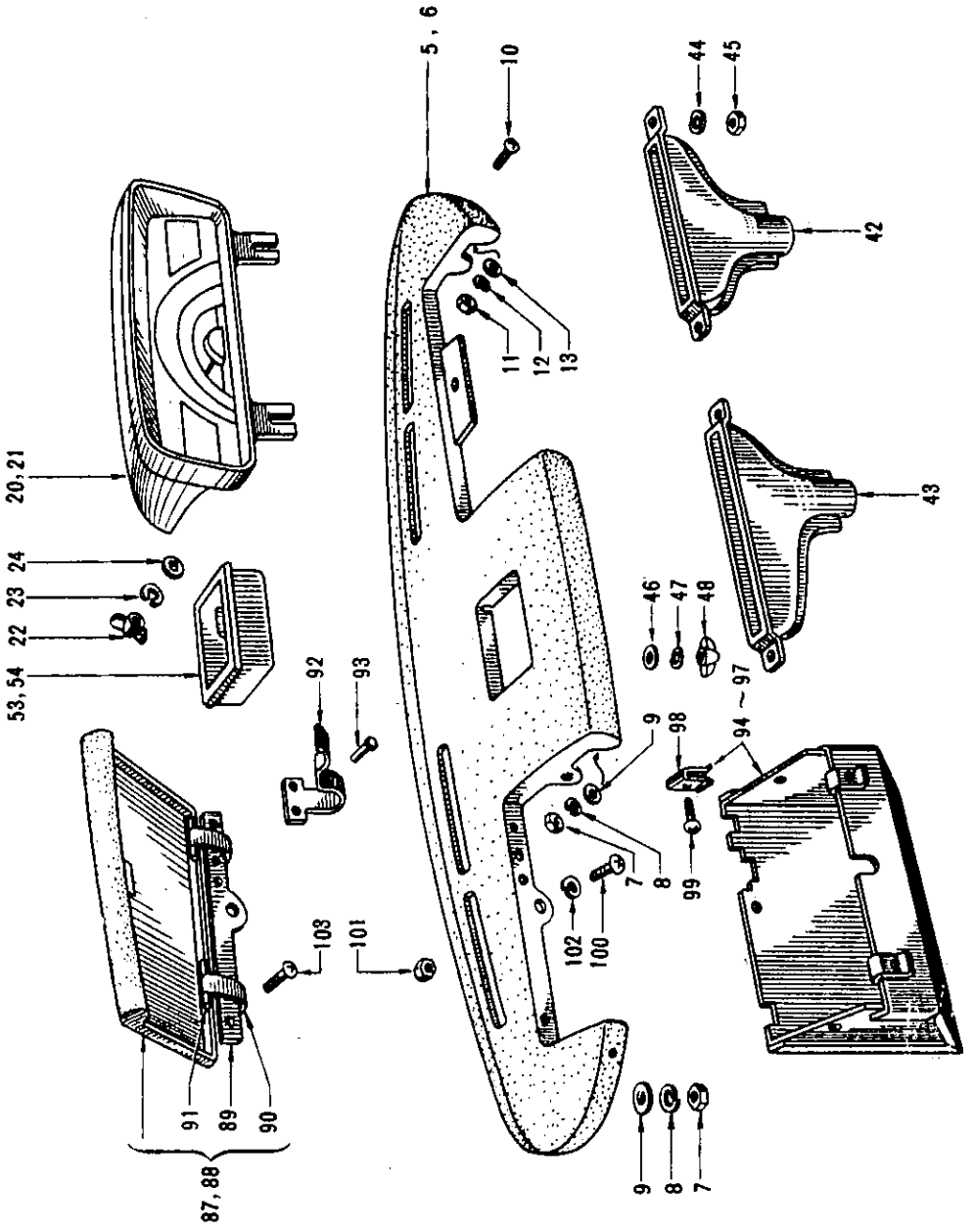

INSTRUMENT PANEL & FITTING

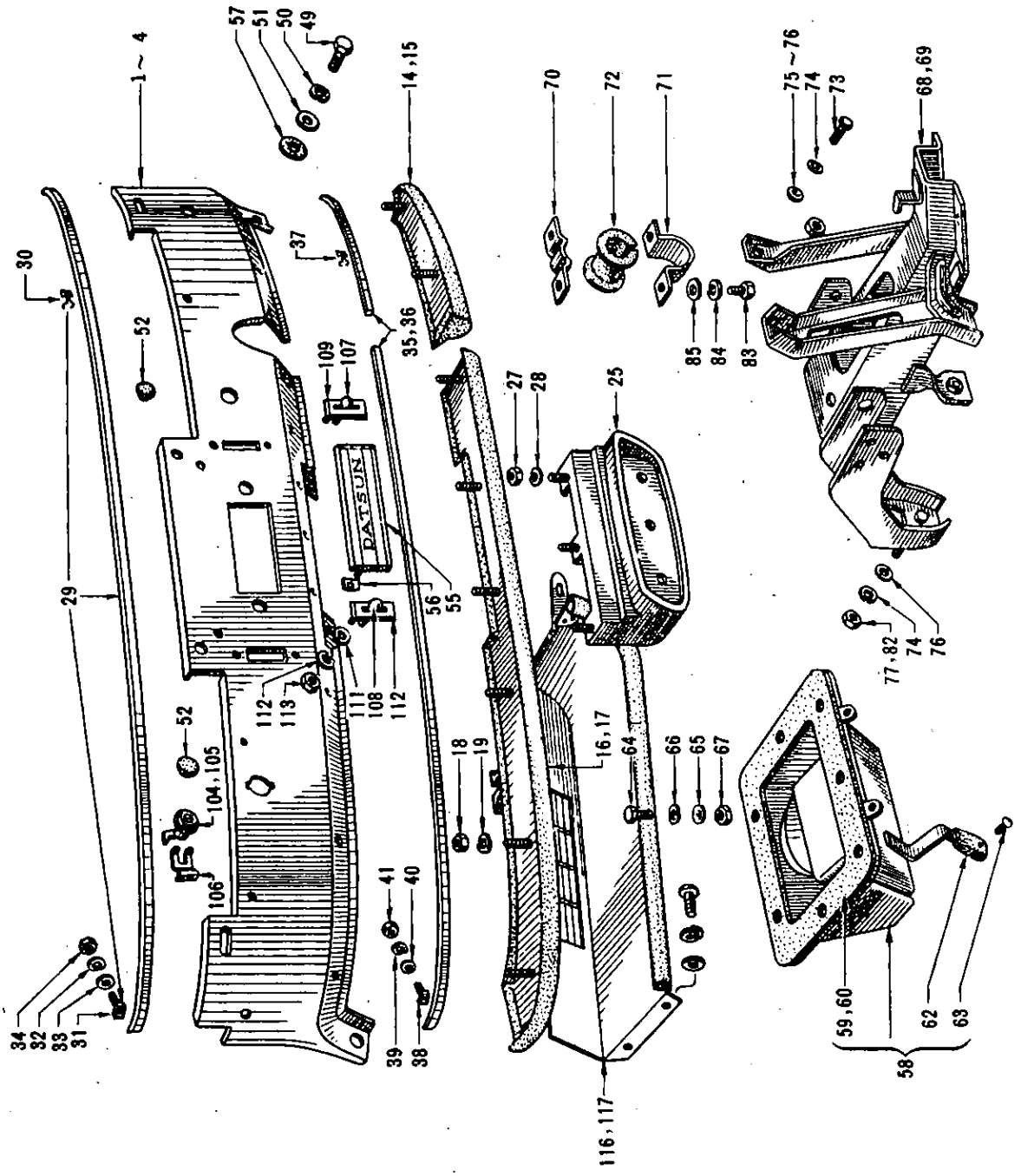

S	KEY NO.	PART NO.	PART NAME	QTY	SALES UNIT	MODEL	ICA
			INSTRUMENT PANEL & FITTING				
	1	68100-10630	ASSY-PANEL,INSTRUMENT	1		R DRIVE 410	
	2	68100-13230	ASSY-PANEL,INSTRUMENT(FROM SEPT.-64)	1		R DRIVE 410	N
*	3	68100-10830	ASSY-PANEL,INSTRUMENT	1		L DRIVE 410	
	4	68100-13930	ASSY-PANEL,INSTRUMENT(FROM SEPT.-64)	1	1	L DRIVE 410	N
	5	68304-10600	ASSY-PAD,INSTRUMENT,UPPER	1	1	R DRIVE 410	
	6	68304-10800	ASSY-PAD,INSTRUMENT,UPPER	1	1	L DRIVE 410	
	7	00911-14010	NUT TO FIX INSTRUMENT PANEL	4		410	
	8	00915-11010	WASHER-LOCK TO FIX INSTRUMENT PANEL	4	100	410	
	9	00915-41010	WASHER-PLAIN TO FIX INSTRUMENT PANEL	4		410	
	10	00314-01210	SCREW TO FIX INSTRUMENT PAD UPPER	2	50	410	
	11	00911-14010	NUT TO FIX INSTRUMENT PAD UPPER	2		410	
	12	00915-11010	WASHER-LOCK TO FIX INSTRUMENT PAD UPPER	2	100	410	
	13	00915-41010	WASHER-PLAIN TO FIX INSTRUMENT PAD UPPER	2		410	
*	14	68350-10600	ASSY-PAD,INSTRUMENT,LOWER(R.H.)	1		R DRIVE 410	
*	15	68350-10800	ASSY-PAD,INSTRUMENT,LOWER(R.H.)	1	1	L DRIVE 410	

Printed in Japan

REVISED: SEPTEMBER,1968

S	KEY NO.	PART NO.	PART NAME	Q'TY	SALES UNIT	MODEL	ICA
*	16	68351-10600	ASSY-PAD,INSTRUMENT,LOWER(L.H.)	1		R DRIVE 410	
	17	68351-10800	ASSY-PAD,INSTRUMENT,LOWER(L.H.)	1		L DRIVE 410	
	18	00911-14010	NUT TO FIX PAD	8		410	
	19	00915-11010	WASHER-LOCK TO FIX PAD	8	100	410	
	20	68401-10600	ASSY-METER COVER	1		410	
	21	68401-13200	ASSY-METER COVER(FROM SEPT.-64)	1	1	410	N
	22	00913-44410	NUT-WING TO FIX METER COVER	3		410	
	23	00915-11410	WASHER-LCOK TO FIX METER COVER	3		410	
	24	00915-41410	WASHER-PLAIN TO FIX METER COVER	2		410	
	25	68831-10600	BRACKET-FIXING KNOB	1		410	
	26	68831-13200	BRACKET-FIXING KNOB(FROM SEPT.-64)	1	1	410	N
	27	00911-14410	NUT TO FIX KNOB BRACKET	3		410	
	28	00915-11410	WASHER-LOCK TO FIX KNOB BRACKET	3		410	
	29	68860-10650	SET-MOULDING,INSTRUMENT,UPPER	1		410	
	30	68865-10600	CLIP-MOLDING,INSTRUMENT	6	1	410	
	31	68866-10600	RETAINER-MOLDING,INSTRUMENT	2	10	410	
	32	00915-10610	WASHER-LOCK TO FIX MOULDING,UPPER	2		410	
	33	00915-40610	WASHER-PLAIN TO FIX MOULDING,UPPER	2		410	
	34	00911-10610	NUT TO FIX MOULDING,UPPER	2		410	

Printed in Japan

REVISED: SEPTEMBER,1968

S	KEY NO.	PART NO.	PART NAME	QTY	SALES UNIT	MODEL	ICA
	35	68861-10650	SET-MOULDING,INSTRUMENT,LOWER	1	1	R DRIVE 410	
	36	68861-10850	SET-MOULDING,INSTRUMENT,LOWER	1	1	L DRIVE 410	
	37	68865-10600	CLIP-MOULDING,INSTRUMENT	2	1	410	
	38	68866-10600	RETAINER-MOULDING,INSTRUMENT	1	10	410	
	39	00915-10610	WASHER-LOCK TO FIX MOULDING,LOWER	2		410	
	40	00915-40610	WASHER-PLAIN TO FIX MOULDING,LOWER	2		410	
	41	00911-10610	NUT TO FIX MOULDING,LOWER	2		410	
*	42	27040-10600	ASSY-NOZZLE,DEMISTER(R.H.)	1	1	410	
*	43	27041-10600	ASSY-NOZZLE,DEMISTER(L.H.)	1	1	410	
	44	00915-11010	WASHER-LOCK TO FIX NOZZLE	2	100	410	
	45	00911-14010	NUT TO FIX NOZZLE	2		410	
	46	00915-41410	WASHER-PLAIN TO FIX INSTRUMENT ASSY,UPPER	3		410	
	47	00915-11410	WASHER-LOCK TO FIX INSTRUMENT ASSY,UPPER	3		410	
	48	00913-44410	NUT-WING TO FIX INSTRUMENT ASSY,UPPER	3		410	
	49	00114-41210	BOLT TO FIX INSTRUMENT ASSY,SIDE	2		410	
	50	00915-11410	WASHER-LOCK TO FIX INSTRUMENT ASSY,SIDE	2		410	
	51	00915-41410	WASHER-PLAIN TO FIX INSTRUMENT ASSY,SIDE	2		410	
	52	68871-10600	PLUG-INSTRUMENT	2	1	410 A.B. TYPE	

Printed in Japan

REVISED: SEPTEMBER,1968

S	KEY NO.	PART NO.	PART NAME	Q'TY	SALES UNIT	MODEL	ICA
*	53	96500-10600	ASSY-ASH TRAY	1	2	410	
*	54	96500-13200	ASSY-ASH TRAY(BLACK)(FROM SEPT.-64)	1	1	410	N
	55	68880-10600	MASK-RADIO APERTURE	1	1	410	
	56	00918-11000	SPIRE-FIXING	2		410	
	57	68875-10600	WASHER-INSTRUMENT	5	5	410	
	58	66501-10600	ASSY-CONTROL BOX,AIR VENTILATOR	1	1	410	
	59	66510-10600	PACKING-AIR VENTILATOR	1	1	410	
	60	66513-10601	SPRING-AIR VENTILATOR LID	1	1	410	
	61	66514-10600	BUMPER-AIR VENTILATOR LID	1	1	410	
	62	66515-10600	KNOB-AIR VENTILATOR LEVER	1	1	410	
	63	66569-32200	SCREW	1	2	410	
	64	00469-01210	SCREW TO FIX CONTROL BOX	7	50	410	
	65	00915-41010	WASHER-PLAIN TO FIX CONTROL BOX	7		410	
	66	00915-11010	WASHER-LOCK TO FIX CONTROL BOX	7	100	410	
	67	00911-14010	NUT TO FIX CONTROL BOX	7		410	
*	68	46470-10600	ASSY-BRACKET,PEDAL & STEERING COLUMN	1		R DRIVE 410	
	69	46470-10800	ASSY-BRACKET,PEDAL & STEERING COLUMN	1		L DRIVE 410	
	70	48324-10600	CLAMP-STEERING COLUMN UPPER	1	1	410	
	71	48326-10600	CLAMP-STEERING COLUMN LOWER	1		410	
	72	48325-04100	PACKING-RUBBER,STEERING COLUMN	1	5	410	

Printed in Japan

REVISED: SEPTEMBER,1968

S	KEY NO.	PART NO.	PART NAME	Q'TY	SALES UNIT	MODEL	ICA
	73	00114-41410	BOLT TO FIX STEERING BRACKET TO DASH UPPER	8	50	R DRIVE 410	
	74	00915-11410	WASHER-LOCK TO FIX STEERING BRACKET TO DASH UPPER	8		R DRIVE 410	
	75	00915-41410	WASHER-PLAIN TO FIX STEERING BRACKET TO DASH UPPER	3		R DRIVE 410	
	76	00915-51410	WASHER-PLAIN TO FIX STEERING BRACKET TO DASH UPPER	5		R DRIVE 410	
	77	00911-11410	NUT TO FIX STEERING BRACKET TO DASH UPPER	2		R DRIVE 410	
	78	00114-41610	BOLT TO FIX STEERING BRACKET TO DASH UPPER	5	50	L DRIVE 410	
	79	00915-11410	WASHER-LOCK TO FIX STEERING BRACKET TO DASH UPPER	5		L DRIVE 410	
	80	00915-41410	WASHER-PLAIN TO FIX STEERING BRACKET TO DASH UPPER	2		L DRIVE 410	
	81	00915-51410	WASHER-PLAIN TO FIX STEERING BRACKET TO DASH UPPER	3		L DRIVE 410	
	82	00911-11410	NUT TO FIX STEERING BRACKET TO DASH UPPER	2		L DRIVE 410	
	83	00114-41810	BOLT TO FIX STEERING BRACKET TO INSTRUMENT PANEL	2	100	410	
	84	00915-11410	WASHER-LOCK TO FIX STEERING BRACKET TO INSTRUMENT PANEL	2		410	
	85	00915-41410	WASHER-PLAIN TO FIX STEERING BRACKET TO INSTRUMENT PANEL	2		410	
	86	67830-10600	SEAL-AIR BOX SIDE	2	10	410	
	87	68600-10600	ASSY-PANEL,GLOVE BOX LID	1		R DRIVE 410	

Printed in Japan

REVISED: SEPTEMBER,1968

S	KEY NO.	PART NO.	PART NAME	Q'TY	SALES UNIT	MODEL	ICA
	88	68600-10800	ASSY-PANEL,GLOVE BOX L ID	1		L DRIVE 41 0	
	89	68228-10601	HINGE-GLOVE BOX LID,FE MALE	1	10	410	
	90	68609-10600	ROLLER-GLOVE BOXLID	2	1	410	
	91	68332-10600	PIN-HINGE,GLOVE BOX LI D	2	1	410	
	92	68608-10600	SPRING-GLOVE BOX LID	1		410	
	93	00610-30400	RIVET	2		410	
	94	68601-10651	BOX-GLOVE	1	1	R DRIVE 41 0	
*	95	68601-13250	BOX-GLOVE(FROM 30-OCT. -64)	1	1	R DRIVE 41 0	Y
	96	68601-10851	BOX-GLOVE	1		L DRIVE 41 0	
*	97	68601-13350	BOX-GLOVE(FROM C/# P41 0-306621)	1		L DRIVE 41 0	Y
*	98	68635-09400	NUT-U TYPE	4		410	
	99	00514-01010	SCREW TO FIX GLOVE BOX	4	50	410	
	100	00314-01210	SCREW TO FIX GLOVE BOX	1	50	410	
	101	00911-14010	NUT TO FIX GLOVE BOX	1		410	
	102	00915-41010	WASHER-PLAIN TO FIX GL OVE BOX	1		410	
	103	00314-01210	SCREW(TO FIX GLOVE BOX LID HINGE)	2	50	410	
	104	68630-11400	ASSY-LOCK,GLOVE BOX LI D	1	5	R DRIVE 41 0	
	105	68630-10800	ASSY-LOCK,GLOVE BOX LI D	1		L DRIVE 41 0	
	106	80590-10601	CLIP-RETAINING,CYLINDE R LOCK	1	10	410	
	107	27135-10600	ASSY-LEVER,HEATER CONT ROL(R.H.)	1		410	

S	KEY NO.	PART NO.	PART NAME	Q'TY	SALES UNIT	MODEL	ICA
	108	27145-10600	ASSY-LEVER,ROOM DEFROSTER(L.H.)	1	1	410	
	109	27155-10600	ASSY-ESCUTCHEON,HEATER CONTROL(R.H.)	1	5	410	
	110	27156-10600	ASSY-ESCUTCHEON,ROOM DEFROSTER(L.H.)	1	1	410	
	111	00915-40810	WASHER-PLAIN	4		410	
	112	00915-10810	WASHER-LOCK	4		410	
	113	00911-10810	NUT	4	50	410	
	114	68835-10600	FILLER-INSTRUMENT SIDE	2	1	410	
	115	85107-09400	CLIP	4		410	
*	116	96800-13200	ASSY-PACKAGE TRAY(FROM SEPT.-64)	1		R DRIVE 410	
*	117	96800-13300	ASSY-PACKAGE TRAY(FROM SEPT.-64)	1		L DRIVE 410	

Printed in Japan

REVISED: SEPTEMBER,1968

NOTE

DASH TRIMMING

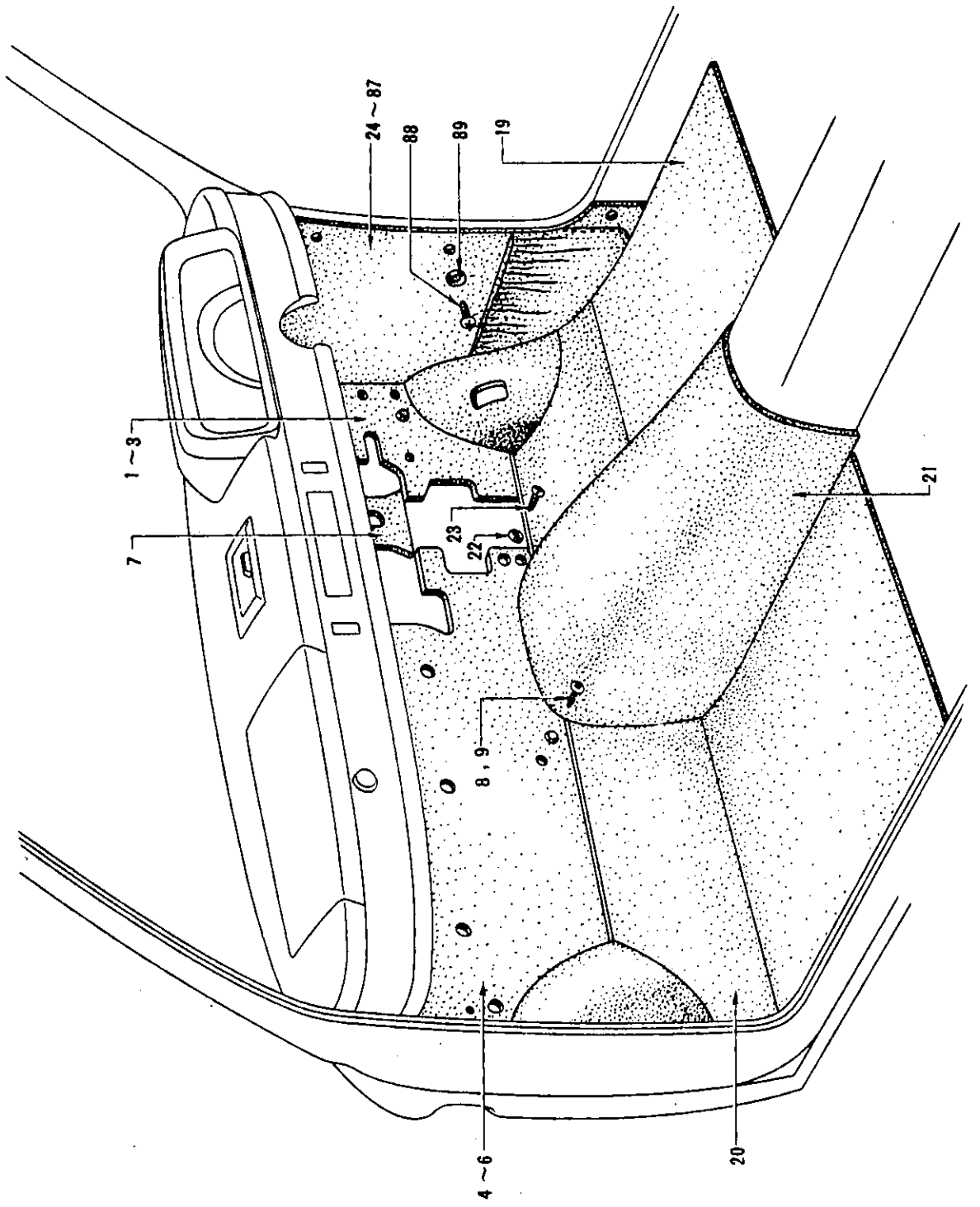

S	KEY NO.	PART NO.	PART NAME	Q'TY	SALES UNIT	MODEL	ICA
			DASH TRIMMING				
	1	67900-10600	ASSY-TRIM,DASH(R.H.)	1	1	R DRIVE 41 0	
	2	67900-10800	ASSY-TRIM,DASH(R.H.)	1		L DRIVE 41 0	
	3	67900-13300	ASSY-TRIM,DASH(R.H.)(FROM SEPT.-64)	1	1	L DRIVE 41 0	N
	4	67901-10600	ASSY-TRIM,DASH(L.H.)	1		R DRIVE 41 0	
	5	67901-13200	ASSY-TRIM,DASH(L.H.)(FROM SEPT.-64)	1	1	R DRIVE 41 0	N
	6	67901-10800	ASSY-TRIM,DASH(L.H.)	1	1	L DRIVE 41 0	
	7	67902-10600	ASSY-TRIM,DASH PEDAL BRACKET	1		R DRIVE 41 0	
	8	67931-08700	FASTENER-TRIM	7	10	R DRIVE 41 0	
	9	67931-08700	FASTENER-TRIM	8	10	L DRIVE 41 0	
	10	67905-10600	INSULATOR-DASH UPPER,A (R.H.)	1		R DRIVE 41 0	
	11	67905-10800	INSULATOR-DASH UPPER,A (R.H.)	1	1	L DRIVE 41 0	
	12	67906-10600	INSULATOR-DASH UPPER,A (L.H.)	1	1	R DRIVE 41 0	
	13	67906-10800	INSULATOR-DASH UPPER,A (L.H.)	1	1	L DRIVE 41 0	
	14	67907-10800	INSULATOR-DASH UPPER,A (CENTER)	1		L DRIVE 41 0	
	15	67908-10600	INSULATOR-DASH UPPER,B (R.H.)	1	1	R DRIVE 41 0	

Printed in Japan

REVISED: SEPTEMBER,1968

S	KEY NO.	PART NO.	PART NAME	Q'TY	SALES UNIT	MODEL	ICA
	16	67908-10800	INSULATOR-DASH UPPER,B (R.H.)	1	1	L DRIVE 410	
	17	67909-10600	INSULATOR-DASH UPPER,B (L.H.)	1	1	R DRIVE 410	
	18	67909-10800	INSULATOR-DASH UPPER,B (L.H.)	1	1	L DRIVE 410	
	19	74920-10800	BOARD-ASPHALT,FLOOR,FRONT(R.H.)	1		410(EXC.L.LN.)	
	20	74921-10600	BOARD-ASPHALT,FLOOR,FRONT(L.H.)	1	1	410 (EXC. L.LN)	
	21	74922-10600	BOARD-ASPHALT,FLOOR,FRONT(CENTER)	1		410 (EXC. L.LN)	
	22	74933-30000	FASTENER-MALE	4		410 (EXC. L.LN)	
	23	00530-61010	SCREW	4	50	410 (EXC. L.LN)	
	24	66900-10604	ASSY-TRIM,DASH SIDE,WITH POCKET(RED)RH(UP TO C/# P410-005883)	1		R DRIVE 410	
	25	66900-10608	ASSY-TRIM,DASH SIDE,WITH PACKET(RED)RH(UP TO C/# P410-009330)	1		R DRIVE 410	N
*	26	66900-13200	ASSY-TRIM,DASH SIDE,WITH POCKET(RED)RH(FROM C/# P4100-100059)	1		R DRIVE 410	N
	27	66900-10605	ASSY-TRIM,DASH SIDE,WITH POCKET(BLUE)RH	1	1	R DRIVE 410	
	28	66900-10609	ASSY-TRIM,DASH SIDE,WITH POCKET(BLUE)RH	1		R DRIVE 410	N
	29	66900-13201	ASSY-TRIM,DASH SIDE,WITH POCKET(BLUE)RH	1		R DRIVE 410	N
	30	66900-10606	ASSY-TRIM,DASH SIDE,WITH POCKET(BROWN)RH	1	1	R DRIVE 410	
	31	66900-10610	ASSY-TRIM,DASH SIDE,WITH POCKET(BROWN)RH	1		R DRIVE 410	N

Printed in Japan

REVISED: SEPTEMBER,1968

S	KEY NO.	PART NO.	PART NAME	QTY	SALES UNIT	MODEL	ICA
	32	66900-13202	ASSY-TRIM,DASH SIDE,WITH POCKET(BROWN)RH	1		R DRIVE 410	N
	33	66900-10607	ASSY-TRIM,DASH SIDE,WITH POCKET(GREEN)RH	1		R DRIVE 410	
	34	66900-10611	ASSY-TRIM,DASH SIDE,WITH POCKET(GREEN)RH	1		R DRIVE 410	N
*	35	66900-13203	ASSY-TRIM,DASH SIDE,WITH POCKET(GREEN)RH	1		R DRIVE 410	N
	36	66900-10808	ASSY-TRIM,DASH SIDE,WITHOUT POCKET(RED)RH	1		L DRIVE 410	
	37	66900-10816	ASSY-TRIM,DASH SIDE,WITHOUT POCKET(RED)RH	1		L DRIVE 410	N
*	38	66900-13300	ASSY-TRIM,DASH SIDE,WITHOUT POCKET(RED)RH	1		L DRIVE 410	N
	39	66900-10809	ASSY-TRIM,DASH SIDE,WITHOUT POCKET(BLUE)RH	1		L DRIVE 410	
	40	66900-10817	ASSY-TRIM,DASH SIDE,WITHOUT POCKET(BLUE)RH	1	1	L DRIVE 410	N
	41	66900-13301	ASSY-TRIM,DASH SIDE,WITHOUT POCKET(BLUE)RH	1		L DRIVE 410	N
	42	66900-10810	ASSY-TRIM,DASH SIDE,WITHOUT POCKET(BROWN)RH	1		L DRIVE 410	
	43	66900-10818	ASSY-TRIM,DASH SIDE,WITHOUT POCKET(BROWN)RH	1		L DRIVE 410	N
*	44	66900-13302	ASSY-TRIM,DASH SIDE,WITHOUT POCKET(BROWN)RH	1		L DRIVE 410	N
	45	66900-10811	ASSY-TRIM,DASH SIDE,WITHOUT POCKET(GREEN)RH	1		L DRIVE 410	
	46	66900-10819	ASSY-TRIM,DASH SIDE,WITHOUT POCKET(GREEN)RH	1		L DRIVE 410	N
	47	66900-13303	ASSY-TRIM,DASH SIDE,WITHOUT POCKET(GREEN)RH	1		L DRIVE 410	N
	48	66900-10812	ASSY-TRIM,DASH SIDE,WITH POCKET(RED)RH	1		L DRIVE 410	

REVISED: SEPTEMBER,1968

Printed in Japan

S	KEY NO.	PART NO.	PART NAME	Q'TY	SALES UNIT	MODEL	ICA
	49	66900-10820	ASSY-TRIM,DASH SIDE,WITH POCKET(RED)RH	1		L DRIVE 410	N
	50	66900-10813	ASSY-TRIM,DASH SIDE,WITH POCKET(BLUE)RH	1		L DRIVE 410	
	51	66900-10821	ASSY-TRIM,DASH SIDE,WITH POCKET(BLUE)RH	1		L DRIVE 410	N
	52	66900-10814	ASSY-TRIM,DASH SIDE,WITH POCKET(BROWN)RH	1		L DRIVE 410	
	53	66900-10822	ASSY-TRIM,DASH SIDE,WITH POCKET(BROWN)RH	1		L DRIVE 410	N
	54	66900-10815	ASSY-TRIM,DASH SIDE,WITH POCKET(GREEN)RH	1	1	L DRIVE 410	
	55	66900-10823	ASSY-TRIM,DASH SIDE,WITH POCKET(GREEN)RH	1		L DRIVE 410	N
	56	66901-10608	ASSY-TRIM,DASH SIDE,WITHOUT POCKET(RED)LH	1		R DRIVE 410	
	57	66901-10616	ASSY-TRIM,DASH SIDE,WITHOUT POCKET(RED)LH	1		R DRIVE 410	N
	58	66901-13200	ASSY-TRIM,DASH SIDE,WITHOUT POCKET(RED)LH	1	1	R DRIVE 410	N
	59	66901-10609	ASSY-TRIM,DASH SIDE,WITHOUT POCKET(BLUE)LH	1	1	R DRIVE 410	
	60	66901-10617	ASSY-TRIM,DASH SIDE,WITHOUT POCKET(BLUE)LH	1		R DRIVE 410	N
*	61	66901-13201	ASSY-TRIM,DASH SIDE,WITHOUT POCKET(BLUE)LH	1	1	R DRIVE 410	N
	62	66901-10610	ASSY-TRIM,DASH SIDE,WITHOUT POCKET(BROWN)LH	1	1	R DRIVE 410	
	63	66901-10618	ASSY-TRIM,DASH SIDE,WITHOUT POCKET(BROWN)LH	1		R DRIVE 410	N
	64	66901-13202	ASSY-TRIM,DASH SIDE,WITHOUT POCKET(BROWN)LH	1	1	R DRIVE 410	N
	65	66901-10611	ASSY-TRIM,DASH SIDE,WITHOUT POCKET(GREEN)LH	1	1	R DRIVE 410	

Printed in Japan

REVISED: SEPTEMBER,1968

S	KEY NO.	PART NO.	PART NAME	Q'TY	SALES UNIT	MODEL	ICA
	66	66901-10619	ASSY-TRIM,DASH SIDE,WITHOUT POCKET(GREEN)LH	1		R DRIVE 410	N
	67	66901-13203	ASSY-TRIM,DASH SIDE,WITHOUT POCKET(GREEN)LH	1		R DRIVE 410	N
	68	66901-10612	ASSY-TRIM,DASH SIDE,WITH POCKET(RED)LH	1		R DRIVE 410	
	69	66901-10620	ASSY-TRIM,DASH SIDE,WITH POCKET(RED)LH	1		R DRIVE 410	N
	70	66901-10613	ASSY-TRIM,DASH SIDE,WITH POCKET(BLUE)LH	1		R DRIVE 410	
	71	66901-10621	ASSY-TRIM,DASH SIDE,WITH POCKET(BLUE)LH	1		R DRIVE 410	N
	72	66901-10614	ASSY-TRIM,DASH SIDE,WITH POCKET(BROWN)LH	1		R DRIVE 410	
	73	66901-10622	ASSY-TRIM,DASH SIDE,WITH POCKET(BROWN)LH	1		R DRIVE 410	N
	74	66901-10615	ASSY-TRIM,DASH SIDE,WITH POCKET(GREEN)LH	1		R DRIVE 410	
	75	66901-10623	ASSY-TRIM,DASH SIDE,WITH POCKET(GREEN)LH	1		R DRIVE 410	N
	76	66901-10804	ASSY-TRIM,DASH SIDE,WITH POCKET(RED)LH	1		L DRIVE 410	
	77	66901-10808	ASSY-TRIM,DASH SIDE,WITH POCKET(RED)LH	1		L DRIVE 410	N
	78	66901-13300	ASSY-TRIM,DASH SIDE,WITH POCKET(RED)LH	1		L DRIVE 410	N
	79	66901-10805	ASSY-TRIM,DASH SIDE,WITH POCKET(BLUE)LH	1		L DRIVE 410	
	80	66901-10809	ASSY-TRIM,DASH SIDE,WITH POCKET(BLUE)LH	1		L DRIVE 410	N
	81	66901-13301	ASSY-TRIM,DASH SIDE,WITH POCKET(BLUE)LH	1		L DRIVE 410	N
	82	66901-10806	ASSY-TRIM,DASH SIDE,WITH POCKET(BROWN)LH	1		L DRIVE 410	

Printed in Japan

REVISED: SEPTEMBER,1968

S	KEY NO.	PART NO.	PART NAME	QTY	SALES UNIT	MODEL	ICA
	83	66901-10810	ASSY-TRIM,DASH SIDE,WITH POCKET(BROWN)LH	1		L DRIVE 410	N
	84	66901-13302	ASSY-TRIM,DASH SIDE,WITH POCKET(BROWN)LH	1		L DRIVE 410	N
	85	66901-10807	ASSY-TRIM,DASH SIDE,WITH POCKET(GREEN)LH	1		L DRIVE 410	
	86	66901-10811	ASSY-TRIM,DASH SIDE,WITH POCKET(GREEN)LH	1		L DRIVE 410	N
	87	66901-13303	ASSY-TRIM,DASH SIDE,WITH POCKET(GREEN)LH	1		L DRIVE 410	N
	88	00530-61620	SCREW TO FIX DASH SIDE TRIM	6		410	
	89	00915-80620	WASHER TO FIX DASH SIDE TRIM	6	50	410	

Printed in Japan

REVISED: SEPTEMBER,1968

NOTE

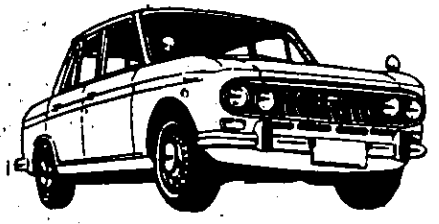

BODY SIDE TRIMMING

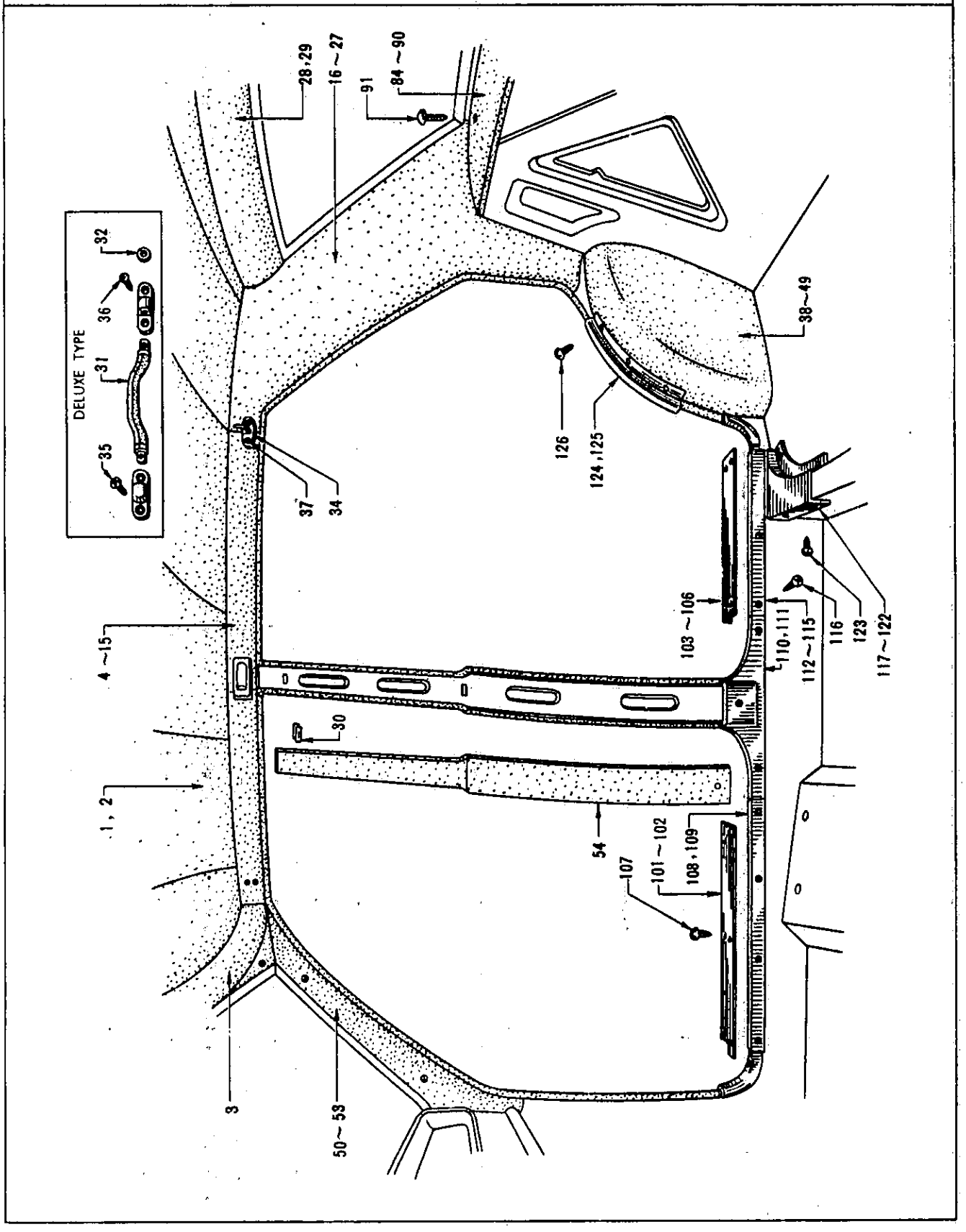

BODY SIDE TRIMMING

S	KEY NO.	PART NO.	PART NAME	Q'TY	SALES UNIT	MODEL	ICA
	1	73910-10600	CLOTH_HEAD LINING			410	
	2	73901-10900	ASSY_CLOTH,HEAD LINING	1	1	WAGON 410	
	3	73911-10600	MOULDING_GARNISH,ROOF FRONT	1	1	410	
	4	73912-10600	MOULDING_GARNISH,ROOF SIDE(R.H.)	1		SEDAN 410	
	5	73912-10601	MOULDING_GARNISH,ROOF SIDE(R.H.)	1	1	SEDAN 410	N
	6	73912-13600	MOULDING_GARNISH,ROOF SIDE(R.H.)	1	1	DELUXE 410	Y
	7	73912-10900	MOULDING_GARNISH,ROOF SIDE(R.H.)	1		WAGON 410	
	8	73912-10901	MOULDING_GARNISH,ROOF SIDE(R.H.)	1		WAGON 410	N
*	9	73912-10902	MOULDING_GARNISH,ROOF SIDE(R.H.)	1		WAGON 410	Y
	10	73913-10600	MOULDING_GARNISH,ROOF SIDE(L.H.)	1		SEDAN 410	
	11	73913-10601	MOULDING_GARNISH,ROOF SIDE(L.H.)	1	1	SEDAN 410	N
	12	73913-13600	MOULDING_GARNISH,ROOF SIDE(L.H.)	1	1	DELUXE 410	Y
	13	73913-10900	MOULDING_GARNISH,ROOF SIDE(L.H.)	1		WAGON 410	
	14	73913-10901	MOULDING_GARNISH,ROOF SIDE(L.H.)	1		WAGON 410	N
*	15	73913-10902	MOULDING_GARNISH,ROOF SIDE(L.H.)	1	1	WAGON 410	Y
	16	73914-10600	MOULDING_GARNISH,REAR CORNER(R.H.)	1	1	SEDAN 410	

Printed in Japan

REVISED: SEPTEMBER,1968

S	KEY NO.	PART NO.	PART NAME	Q'TY	SALES UNIT	MODEL	ICA
	17	73914-10601	MOULDING_GARNISH,REAR CORNER(R.H.)	1	1	SEDAN 410	N
	18	73914-13200	MOULDING_GARNISH,REAR CORNER(R.H.)	1	1	STANDARD 410	Y
	19	73914-10601	MOULDING_GARNISH,REAR CORNER(R.H.)	1	1	SEDAN 410	
	20	73914-13600	MOULDING_GARNISH,REAR CORNER(R.H.)	1	1	DELUXE 410	Y
	21	73914-10900	MOULDING_GARNISH,REAR SIDE(R.H.)	1		WAGON 410	
	22	73914-10901	MOULDING_GARNISH,REAR SIDE(R.H.)	1		WAGON 410	N
*	23	73914-10902	MOULDING_GARNISH,REAR SIDE(R.H.)	1		WAGON 410	Y
	24	73915-10600	MOULDING_GARNISH,REAR CORNER(L.H.)	1	1	SEDAN 410	
	25	73915-10601	MOULDING_GARNISH,REAR CORNER(L.H.)	1	1	SEDAN 410	N
	26	73915-10901	MOULDING_GARNISH,REAR SIDE(L.H.)	1		WAGON 410	N
*	27	73915-10902	MOULDING_GARNISH,REAR SIDE(L.H.)	1		WAGON 410	Y
	28	73916-10600	MOULDING_GARNISH,ROOF REAR	1	1	SEDAN 410	
*	29	73916-10900	MOULDING_GARNISH,ROOF TAIL	1		WAGON 410	
	30	73918-10601	FASTENER_GARNISH MOULDING	28	1	SEDAN 410	
	31	96700-11400	ASSY_STRAP,ASSIST	2	1	WAGON 410	
*	32	96750-11400	HANGER_COAT	2		WAGON 410	
	33	96750-13600	HANGER_COAT(FROM 649)	2	2	WAGON 410	Y
	34	96750-32201	HANGER_COAT	2	5	SEDAN 410	
	35	00434-01020	SCREW	4	50	WAGON 410	

REVISED: SEPTEMBER,1968

Printed in Japan

S	KEY NO.	PART NO.	PART NAME	QTY	SALES UNIT	MODEL	ICA
	36	00434-02020	SCREW	2	50	WAGON 410	
	37	00530-61320	SCREW	4	50	SEDAN 410	
	38	76905-10600	ASSY_TRIM,REAR WHEEL HOUSE(YELLOW #386)RH	1	1	410	
*	39	76905-13200	ASSY_TRIM,REAR WHEEL HOUSE(GRAY)RH	1		410	N
	40	76905-10601	ASSY_TRIM,REAR WHEEL HOUSE(BLUE #382)RH	1	1	410	
	41	76905-13201	ASSY_TRIM,REAR WHEEL HOUSE(BLUE)RH	1		410	N
	42	76905-10602	ASSY_TRIM,REAR WHEEL HOUSE(GREEN #384)RH	1	1	410	
	43	76905-13203	ASSY_TRIM,REAR WHEEL HOUSE(GREEN)RH	1	1	410	N
	44	76906-10600	ASSY_TRIM,REAR WHEEL HOUSE(YELLOW #386)RH	1	1	410	
	45	76906-13200	ASSY_TRIM,REAR WHEEL HOUSE(GRAY)RH	1		410	N
	46	76906-10601	ASSY_TRIM,REAR WHEEL HOUSE(BLUE #382)RH	1	1	410	
	47	76906-13201	ASSY_TRIM,REAR WHEEL HOUSE(BLUE)RH	1		410	N
	48	76906-10602	ASSY_TRIM,REAR WHEEL HOUSE(GREEN #384)RH	1	1	410	
	49	76906-13203	ASSY_TRIM,REAR WHEEL HOUSE(GREEN)RH	1	1	410	N
*	50	76911-10600	MOULDING_GARNISH,WINDSHIELD PILLAR(R.H.)	1	5	410	
	51	76911-13200	MOULDING_GARNISH,WINDSHIELD PILLAR(R.H.)	1	1	410	Y
*	52	76912-10600	MOULDING_GARNISH,WINDSHIELD PILLAR(L.H.)	1	10	410	
	53	76912-13200	MOULDING_GARNISH,WINDSHIELD PILLAR(L.H.)	1	1	410	Y

Printed in Japan

REVISED: SEPTEMBER,1968

S	KEY NO.	PART NO.	PART NAME	Q'TY	SALES UNIT	MODEL	ICA
	54	76921-10600	MOULDING_GARNISH,CENTE R PILLAR(RED)(RH)	1	1	410	
	55	76921-10608	MOULDING_GARNISH,CENTE R PILLAR(RED)(RH)	1		410	N
*	56	76921-13200	MOULDING_GARNISH,CENTE R PILLAR(RED)(RH)	1		410	N
	57	76921-13204	MOULDING_GARNISH,CENTE R PILLAR(RH)	1	1	410	N
	58	76921-10601	MOULDING_GARNISH,CENTE R PILLAR(BLUE)(RH)	1	1	410	
	59	76921-10609	MOULDING_GARNISH,CENTE R PILLAR(BLUE)(RH)	1	1	410	N
	60	76921-13201	MOULDING_GARNISH,CENTE R PILLAR(BLUE)(RH)	1		410	N
	61	76921-13204	MOULDING_GARNISH,CENTE R PILLAR(RH)	1	1	410	N
	62	76921-10602	MOULDING_GARNISH,CENTE R PILLAR(BROWN)(RH)	1	1	410	
	63	76921-10610	MOULDING_GARNISH,CENTE R PILLAR(BROWN)(RH)	1		410	N
	64	76921-13204	MOULDING_GARNISH,CENTE R PILLAR(RH)	1	1	410	N
	65	76921-10603	MOULDING_GARNISH,CENTE R PILLAR(GREEN)(RH)	1		410	
	66	76921-10611	MOULDING_GARNISH,CENTE R PILLAR(GREEN)(RH)	1		410	N
	67	76921-13203	MOULDING_GARNISH,CENTE R PILLAR(GREEN)(RH)	1	1	410	N
	68	76921-13204	MOULDING_GARNISH,CENTE R PILLAR(RH)	1	1	410	N
	69	76922-10600	MOULDING_GARNISH,CENTE R PILLAR(RED)(LH)	1	1	410	
	70	76922-10608	MOULDING_GARNISH,CENTE R PILLAR(RED)(LH)	1		410	N

Printed in Japan

REVISED: SEPTEMBER,1968

S	KEY NO.	PART NO.	PART NAME	Q'TY	SALES UNIT	MODEL	ICA
*	71	76922-13200	MOULDING_GARNISH,CENTER PILLAR(RED)(LH)	1		410	N
	72	76922-13204	MOULDING_GARNISH,CENTER PILLAR(LH)	1	1	410	N
	73	76922-10601	MOULDING_GARNISH,CENTER PILLAR(BLUE)(LH)	1	1	410	
	74	76922-10609	MOULDING_GARNISH,CENTER PILLAR(BLUE)(LH)	1		410	N
	75	76922-13201	MOULDING_GARNISH,CENTER PILLAR(BLUE)(LH)	1		410	N
	76	76922-13204	MOULDING_GARNISH,CENTER PILLAR(LH)	1	1	410	N
	77	76922-10602	MOULDING_GARNISH,CENTER PILLAR(BROWN)(LH)	1	1	410	
	78	76922-10610	MOULDING_GARNISH,CENTER PILLAR(BROWN)(LH)	1		410	N
	79	76922-13204	MOULDING_GARNISH,CENTER PILLAR(LH)	1	1	410	N
	80	76922-10603	MOULDING_GARNISH,CENTER PILLAR(GREEN)(LH)	1		410	
	81	76922-10611	MOULDING_GARNISH,CENTER PILLAR(GREEN)(LH)	1	1	410	N
	82	76922-13203	MOULDING_GARNISH,CENTER PILLAR(GREEN)(LH)	1	1	410	N
	83	76922-13204	MOULDING_GARNISH,CENTER PILLAR(L.H.)	1	1	410	N
	84	79910-10600	ASSY_FINISH,REAR PARCEL SHELF(YELLOW)	1	1	410	
	85	79910-13200	ASSY_FINISH,REAR PARCEL SHELF(YELLOW)(FROM SEPT.64)	1		410	N
	86	79910-10601	ASSY_FINISH,REAR PARCEL SHELF(BLUE)	1	1	410	
	87	79910-13201	ASSY_FINISH,REAR PARCEL SHELF(BLUE)(FROM SEPT.64)	1		U.L.LU UN.LN.LUN.410 (A.B TYPE)	N

Printed in Japan

REVISED: SEPTEMBER,1968

S	KEY NO.	PART NO.	PART NAME	Q'TY	SALES UNIT	MODEL	ICA
	88	79910-10602	ASSY_FINISH,REAR PARCEL SHELF(GREEN)	1	1	U,L,LU UN, LN,LUN,410 (A,B TYPE)	
	89	79910-13203	ASSY_FINISH,REAR PARCEL SHELF(GREEN)(FROM SEPT.64)	1		410	N
	90	79910-11600	ASSY_FINISH,REAR PARCEL SHELF(CREAM)	1		410 A.B TYPE	
	91	79915-10600	FASTENER_TRIM	7		U,L,LU,UN, LN,LUN,410 (A,B TYPE)	
	92	79910-11400	ASSY_FINISH,REAR PARCEL SHELF(YELLOW)	1		410	
	93	79910-11403	ASSY_FINISH,REAR PARCEL SHELF(YELLOW)(FROM SET.64)	1	1	410	Y
	94	79910-11401	ASSY_FINISH,REAR PARCEL SHELF(BLUE)	1		410	
	95	79910-11404	ASSY_FINISH,REAR PARCEL SHELF(BLUE)	1	1	U,L,LU,UN, LN,LUN,410 (D TYPE)	Y
	96	79910-13605	ASSY_FINISH,REAR PARCEL SHELF(BLUE)(FROM SEPT.64)	1		U,L,LU,UN, LN,LUN,410 (D TYPE)	N
	97	79910-11402	ASSY_FINISH,REAR PARCEL SHL(GREEN)	1	1	U,L,LU,UN, LN,LUN,410 (D TYPE)	
	98	79910-11405	ASSY_FINISH,REAR PARCEL SHELF(GEEN)	1	1	U,L,LU,UN, LN,LUN,410 (D TYPE)	Y
	99	79910-13606	ASSY_FINISH,REAR PARCEL SHELF(GREEN)(FROM SEPT.64)	1		410	N
	100	80919-32200	CLIP_DOOR FINISH	7	10	U,L,LU,UN, LN,LUN,410 (D TYPE)	
	101	76931-10600	PLATE_SCUFF,FRONT(R.H.)	1		410(EXC.A.B.TYPE)	

Printed in Japan

REVISED: SEPTEMBER,1968

S	KEY NO.	PART NO.	PART NAME	Q'TY	SALES UNIT	MODEL	ICA
	102	76932-10600	PLATE_SCUFF,FRONT(L.H.)	1		410(EXC.A.B.TYPE)	
*	103	76933-10600	PLATE_SCUFF,REAR(R.H.)	1	1	410(EXC.A.B.TYPE)	
	104	76933-10601	PLATE_SCUFF,REAR(R.H.)	1	1	410(EXC.A.B.TYPE)	Y
*	105	76934-10600	PLATE_SCUFF,REAR(L.H.)	1		410(EXC.A.B.TYPE)	
*	106	76934-10601	PLATE_SCUFF,REAR(L.H.)	1		410(EXC.A.B.TYPE)	Y
	107	00510-61010	SCREW	22	50	410 (EXC.A.B.TYPE)	
	108	76935-10600	RETAINER_SCUFF,FRONT(R.H.)	1	1	410	
	109	76936-10600	RETAINER_SCUFF,FRONT(L.H.)	1	1	410	
*	110	76937-10600	RETAINER_SCUFF,CENTER(UP TO C#4410000199)(UP TO C#4P410003499)	2		410	
	111	76937-10601	RETAINER_SCUFF,CENTER(FROM C#4410000200)(FROM C#4P410003500)	2	1	410	N
*	112	76939-10600	RETAINER_SCUFF,REAR(R.H.)(UP TO C#4410000199)(UP TO C#4P410003499)	1	1	410	
	113	76939-10601	RETAINER_SCUFF,REAR(R.H.)(FROM C#4410000200)(FROM C#4P410003500)	1		410	N
*	114	76940-10600	RETAINER_SCUFF,REAR(L.H.)(UP TO C#4410000199)(UP TO C#4P410003499)	1	1	410	
	115	76940-10601	RETAINER_SCUFF,REAR(L.H.)(FROM C#4410000200)(FROM C#4P410003500)	1		410	N
	116	00530-61010	SCREW	18	50	410	

Printed in Japan

REVISED: SEPTEMBER,1968

S	KEY NO.	PART NO.	PART NAME	QTY	SALES UNIT	MODEL	ICA
	117	76941-10600	FINISHER_CROSS MEMBER SIDE REAR(R.H.)(UP TO C#4410000199)(UP TO C#4P410003499)	1		410	
	118	76941-10601	FINISHER_CROSS MEMBER SIDE REAR(R.H.)(FROM C#4410000200)(FROM C#4P410003500)	1	1	410	N
	119	76941-10901	FINISHER_CROSS MEMBER SIDE REAR(R.H.)	1	1	WAGON 410	
	120	76942-10600	FINISHER_CROSS MEMBER SIDE REAR(L.H.)(UP TO C#4410000199)(UP TO C#4P410003499)	1	1	410	
	121	76942-10601	FINISHER_CROSS MEMBER SIDE REAR(L.H.)(FROM C#4410000200)(FROM C#4P410003500)	1	1	410	N
	122	76942-10901	FINISHER_CROSS MEMBER SIDE REAR(L.H.)	1		WAGON 410	
	123	00510-61010	SCREW	8	50	410	
	124	76945-10600	RETAINER_WEATHERSTRIP, REAR WHEEL HOUSE(R.H.)	1		410	
	125	76946-10600	RETAINER_WEATHERSTRIP, REAR WHEEL HOUSE(L.H.)	1	10	410	
	126	00530-61310	SCREW	6	50	410	
	127	66174-01500	PLUG_RUBBER(7)	1		U.L.LU.UN. LN.LUN.WL. 410	
	128	86350-10600	PLUG_RUBBER(FOR DOOR SWITCH HOLE)	1		U.L.LU.UN. LN.LUN.WL. 410	

Printed in Japan

REVISED: SEPTEMBER,1968

NOTE

FLOOR TRIMMING (3 SPEED)

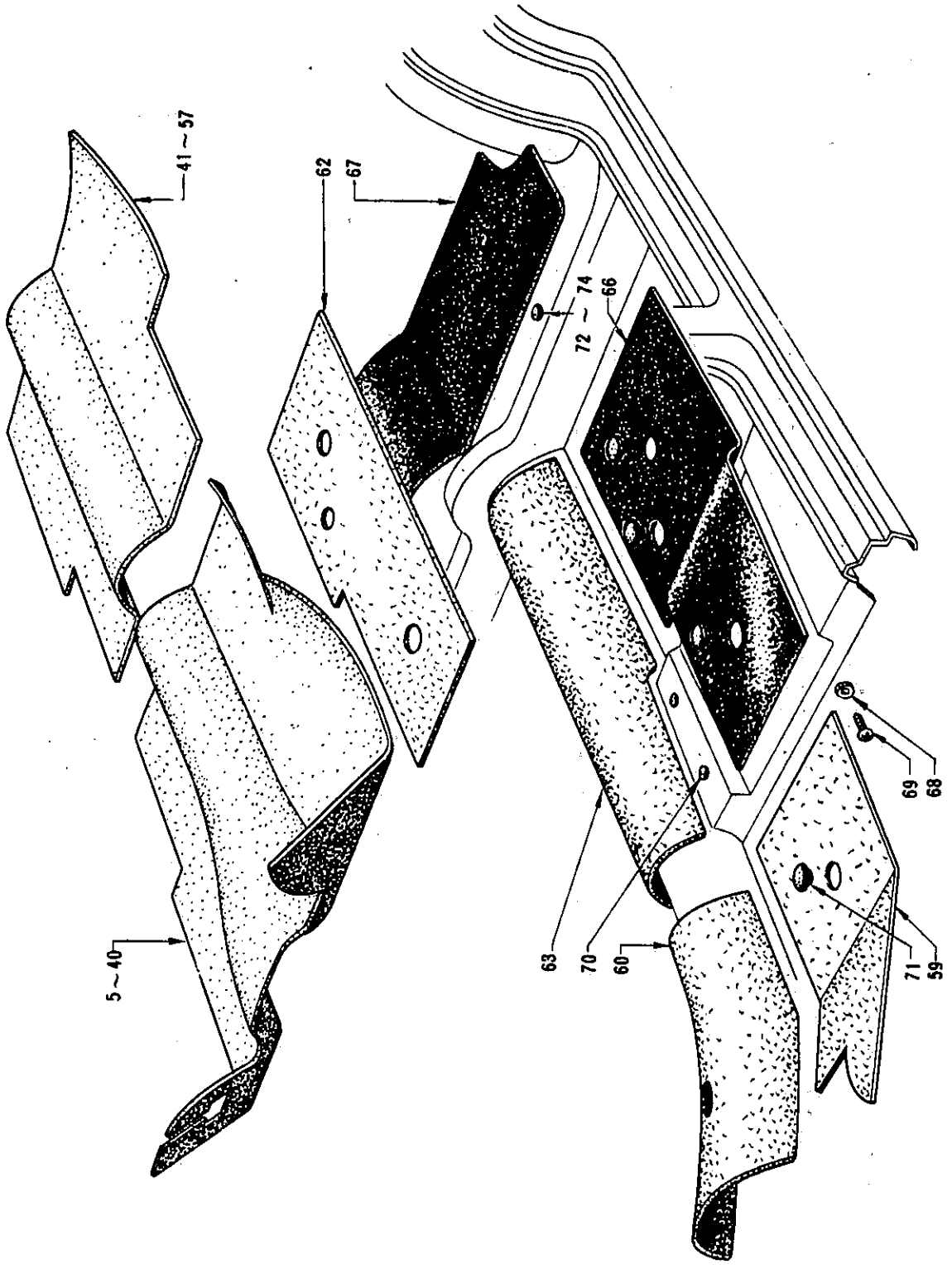

S	KEY NO.	PART NO.	PART NAME	QTY	SALES UNIT	MODEL	ICA
			FLOOR TRIMMING (3-SPEED)				
	1	74902-10600	MAT_FLOOR,FRONT(VINYL)	1		U.UN.3 SPEED(A.B TYPE)410	
	2	74902-13200	MAT_FLOOR,FRONT(VINYL) (FROM 649)	1		U.UN.3 SPEED(A.B TYPE)410	N
	3	74902-10800	MAT_FLOOR,FRONT(VINYL)	1		L DRIVE(A.B TYPE)3 SPEED 410	
	4	74902-13300	MAT_FLOOR,FRONT(VINYL) (FROM 649)	1		L DRIVE(A.B TYPE)3 SPEED 410	N
	5	74902-11400	CARPET_FLOOR,FRONT(RED)	1		U,UN,(D.TYPE)& WAGON 3SPEED 410	
	6	74902-13600	CARPET_FLOOR,FRONT(RED)	1		U,UN,(D.TYPE)& WAGON 3SPEED 410	N
	7	74902-11401	CARPET_FLOOR,FRONT(BLUE)	1		U,UN,(D.TYPE)& WAGON 3SPEED 410	
	8	74902-13601	CARPET_FLOOR,FRONT(BLUE)	1		U,UN,(D.TYPE)& WAGON 3SPEED 410	N
	9	74902-11402	CARPET_FLOOR,FRONT(BROWN)	1		U,UN,(D.TYPE)& WAGON 3SPEED 410	
	10	74902-13602	CARPET_FLOOR,FRONT(BROWN)	1	1	U,UN,(D.TYPE)& WAGON 3SPEED 410	N

Printed in Japan

REVISED: SEPTEMBER,1968

S	KEY NO.	PART NO.	PART NAME	Q'TY	SALES UNIT	MODEL	ICA
	11	74902-11403	CARPET_FLOOR,FRONT(GREEN)	1		U,UN,(D.TYPE)& WAGON 3SPEED 410	
	12	74902-13603	CARPET_FLOOR,FRONT(GREEN)	1	1	U,UN,(D.TYPE)& WAGON 3SPEED 410	N
	13	74902-10802	CARPET_FLOOR,FRONT(RED)	1		L DRIVE(D.TYPE)& WAGON 3 SPEED 410	
	14	74902-13302	CARPET_FLOOR,FRONT(RED)	1		L DRIVE(D.TYPE)& WAGON 3 SPEED 410	N
	15	74902-10803	CARPET_FLOOR,FRONT(BLUE)	1		L DRIVE(D.TYPE)& WAGON 3 SPEED 410	
	16	74902-13303	CARPET_FLOOR,FRONT(BLUE)	1		L DRIVE(D.TYPE)& WAGON 3 SPEED 410	N
	17	74902-10804	CARPET_FLOOR,FRONT(BROWN)	1		L DRIVE(D.TYPE)& WAGON 3 SPEED 410	
	18	74902-13304	CARPET_FLOOR,FRONT(BROWN)	1		L DRIVE(D.TYPE)& WAGON 3 SPEED 410	N
	19	74902-10805	CARPET_FLOOR,FRONT(GREEN)	1		L DRIVE(D.TYPE)& WAGON 3 SPEED 410	
	20	74902-13305	CARPET_FLOOR,FRONT(GREEN)	1	1	L DRIVE(D.TYPE)& WAGON 3 SPEED 410	N

Printed in Japan

REVISED: SEPTEMBER,1968

S	KEY NO.	PART NO.	PART NAME	Q'TY	SALES UNIT	MODEL	ICA
	21	74902-10806	CARPET_FLOOR,FRONT(RED)	1		L DRIVE(D. TYPE)& WAG ON 3 SPEED 410	
	22	74902-13306	CARPET_FLOOR,FRONT(RED)	1		L DRIVE(D. TYPE)& WAG ON 3 SPEED 410	N
	23	74902-10807	CARPET_FLOOR,FRONT(BLUE)	1		L DRIVE(D. TYPE)& WAG ON 3 SPEED 410	
	24	74902-13307	CARPET_FLOOR,FRONT(BLUE)	1		L DRIVE(D. TYPE)& WAG ON 3 SPEED 410	N
	25	74902-10808	CARPET_FLOOR,FRONT(BROWN)	1		L DRIVE(D. TYPE)& WAG ON 3 SPEED 410	
	26	74902-13308	CARPET_FLOOR,FRONT(BROWN)	1		L DRIVE(D. TYPE)& WAG ON 3 SPEED 410	N
	27	74902-10809	CARPET_FLOOR,FRONT(GREEN)	1		L DRIVE(D. TYPE)& WAG ON 3 SPEED 410	
	28	74902-13309	CARPET_FLOOR,FRONT(GREEN)	1		L DRIVE(D. TYPE)& WAG ON 3 SPEED 410	N
	29	74902-11800	CARPET_FLOOR,FRONT(RED)	1		U.UN.(D,TYPE)3 SPEED 410	
	30	74902-14000	CARPET_FLOOR,FRONT(RED)	1		U.UN.(D,TYPE)3 SPEED 410	N
	31	74902-11801	CARPET_FLOOR,FRONT(BLUE)	1		U.UN.(D,TYPE)3 SPEED 410	

S	KEY NO.	PART NO.	PART NAME	Q'TY	SALES UNIT	MODEL	ICA
	32	74902-14001	CARPET_FLOOR,FRONT(BLUE)	1		U.UN.(D,TYPE)3 SPEED 410	N
	33	74902-11802	CARPET_FLOOR,FRONT(BROWN)	1		U.UN.(D TYPE)3 SPEED 410	
	34	74902-14002	CARPET_FLOOR,FRONT(BROWN)	1		U.UN.(D TYPE)3 SPEED 410	N
	35	74902-11803	CARPET_FLOOR,FRONT(GREEN)	1		U.UN.(D TYPE)3 SPEED 410	
	36	74902-14003	CARPET_FLOOR,FRONT(GREEN)	1		U.UN.(D TYPE)3 SPEED 410	N
	37	74907-10600	MAT_FLOOR,REAR(VINYL,GRAY)	1		U.UN.(A.B TYPE) 3SPEED 410	
	38	74907-13200	MAT_FLOOR,REAR(VINYL,GRAY)(FROM 649)	1		U.UN.(A.B TYPE) 3SPEED 410	N
	39	74907-11100	MAT_FLOOR,REAR(FOR SEPARATE SEAT)	1	1	U.L.LU.UN.LN.LUN.(B TYPE)3 SPEED 410	
	40	74907-11101	MAT_FLOOR,REAR(FOR SEPARATE SEAT)(FROM 649)	1		U.L.LU.UN.LN.LUN.(B TYPE)3 SPEED 410	N
	41	74907-11400	CARPET_FLOOR,REAR(RED)	1		WAGON 410	
	42	74907-13600	CARPET_FLOOR,REAR(RED)	1		WAGON 410	N
	43	74907-11401	CARPET_FLOOR,REAR(BLUE)	1		WAGON 410	
	44	74907-13601	CARPET_FLOOR,REAR(BLUE)	1		WAGON 410	N
	45	74907-11402	CARPET_FLOOR,REAR(BROWN)	1		WAGON 410	

Printed in Japan

REVISED: SEPTEMBER,1968

S	KEY NO.	PART NO.	PART NAME	Q'TY	SALES UNIT	MODEL	ICA
	46	74907-13602	CARPET_FLOOR,REAR(BROWN)	1		WAGON 410	N
	47	74907-11403	CARPET_FLOOR,REAR(GREEN)	1		WAGON 410	
	48	74907-13603	CARPET_FLOOR,REAR(GREEN)	1		WAGON 410	N
	49	74907-11800	CARPET_FLOOR,REAR(RED) FOR SEPARATE SEAT	1		L DRIVE(D. TYPE)410	
	50	74907-14000	CARPET_FLOOR,REAR(RED) FOR SEPARATE SEAT	1		L DRIVE(D. TYPE)410	N
	51	74907-11801	CARPET_FLOOR,REAR(BLUE)SOR SEPARATE SEAT	1		L DRIVE(D. TYPE)410	
	52	74907-14001	CARPET_FLOOR,REAR(BLUE)FOR SEPARATE SEAT	1		L DRIVE(D. TYPE)410	N
	53	74907-11802	CARPET_FLOOR,REAR(BROWN)FOR SEPARATE SEAT	1		L DRIVE(D TYPE)410	
	54	74907-14002	CARPET_FLOOR,REAR(BROWN)SOR SEPARATE SEAT	1		L DRIVE(D TYPE)410	N
	55	74907-11803	CARPET_FLOOR,REAR(GREEN)FOR SEPARATE SEAT	1		L DRIVE(D TYPE)410	
	56	74907-14003	CARPET_FLOOR,REAR(GREEN)FOR SEPARATE SEAT	1	1	L DRIVE(D TYPE)410	N
	57	74907-11501	CARPET_FLOOR,REAR	1		DLM.DLMN.410	
	58	74910-10800	INSULATOR_FLOOR,FRONT(R.H.)	1		410	
	59	74911-10600	INSULATOR_FLOOR,FRONT(L.H.)	1	1	410	
	60	74912-10600	INSULATOR_FLOOR,FRONT CENTER	1	1	410	
	61	74913-10600	INSULATOR_FLOOR,REAR(R.H.)	1	1	410	
	62	74914-10600	INSULATOR_FLOOR,REAR(L.H.)	1	1	3 SPEED 410	

Printed in Japan

REVISED: SEPTEMBER,1968

S	KEY NO.	PART NO.	PART NAME	Q'TY	SALES UNIT	MODEL	ICA
	63	74915-10600	INSULATOR_FLOOR,REAR CENTER	1	1	3 SPEED 410	
	64	74942-10900	PLUG(20)(FIXED TO SECOND CROSS MEMBER	1		3 SPEED 410	
	65	74923-10600	BOARD_ASPHALT,FLOOR,REAR(R.H.)	1	1	3 SPEED 410	
	66	74924-10600	BOARD_ASPHALT,FLOOR,REAR(L.H.)	1	1	3 SPEED 410	
	67	74925-10600	BOARD_ASPHALT,FLOOR,REAR SEAT	1		3 SPEED 410	
	68	74933-30000	FASTENER_MALE	2		3 SPEED 410	
	69	00530-61010	SCREW	2	50	3 SPEED 410	
	70	64821-32200	PLUG_LOCATION HOLE(10)	4	50	3 SPEED 410	
	71	74942-04100	PLUG_RUBBER(25)	8		3 SPEED 410	
	72	86350-00100	PLUG_DRAIN HOLE	2	5	3 SPEED 410	
	73	76916-00100	PLUG_RUBBER(12)	4	1	3 SPEED 410	
	74	74942-09500	PLUG_RUBBER(21)	1		U.L.LU.UN.LN,LUN.WL.3 SPEED 410	

Printed in Japan

REVISED: SEPTEMBER,1968

NOTE

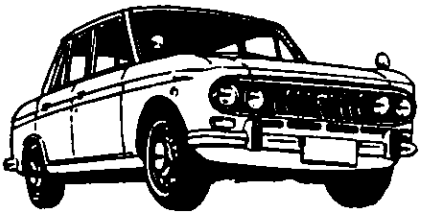

FLOOR TRIMMING (4 SPEED)

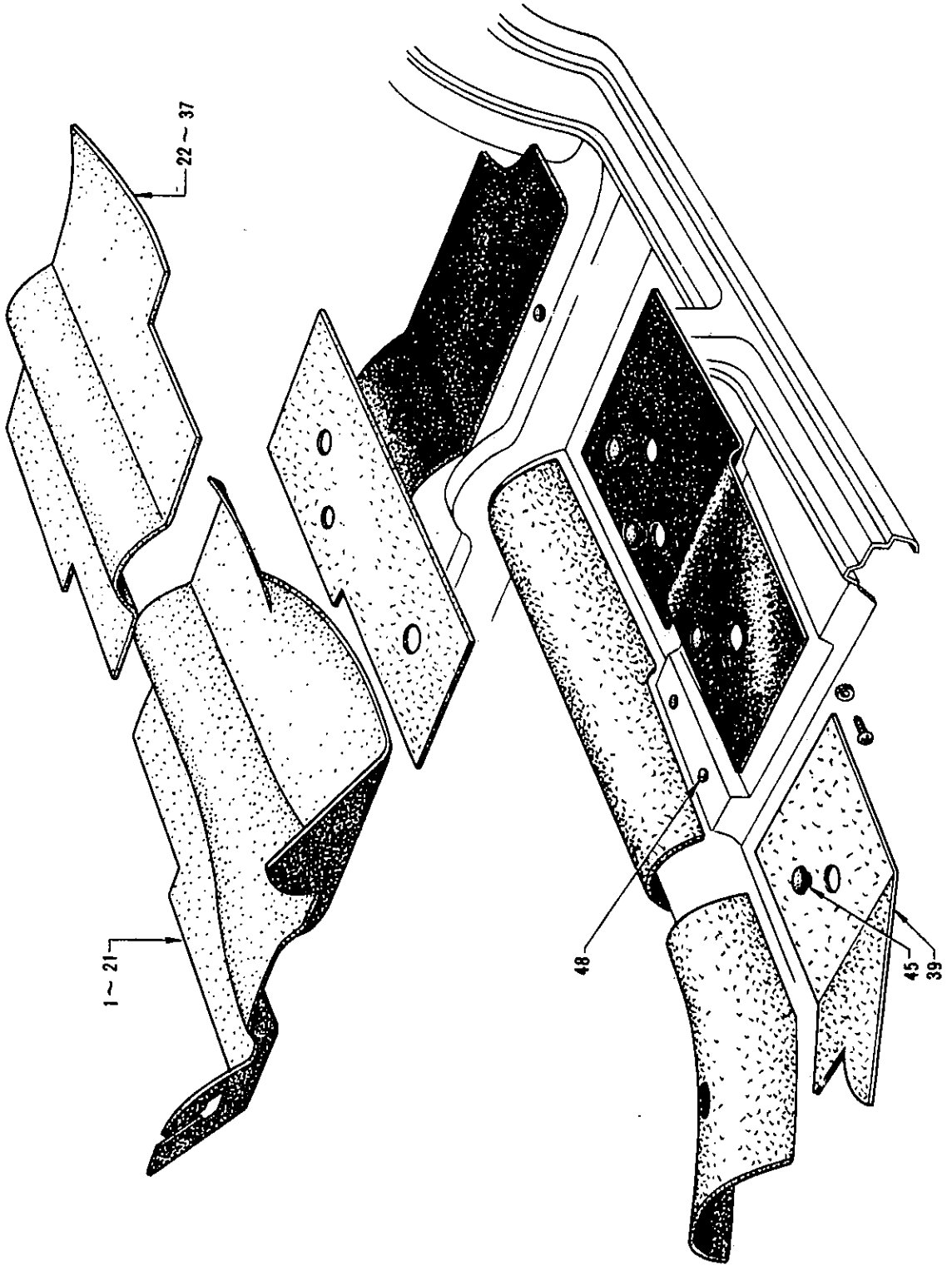

S	KEY NO.	PART NO.	PART NAME	Q'TY	SALES UNIT	MODEL	ICA
			FLOOR TRIMMING (4 SPEED)				
	1	74902-12400	MAT_FLOOR,FRONT(VINYL)	1		R DRIVE 4 SPEED,SS 410	
	2	74902-14300	MAT_FLOOR,FRONT(VINYL) (FROM 649)	1		R DRIVE 4 SPEED,SS 410	N
	3	74902-12500	MAT_FLOOR,FRONT(VINYL)	1		L DRIVE 4 SPEED 410	
	4	74902-14400	MAT_FLOOR,FRONT(VINYL) (FROM 649)	1		L DRIVE 4 SPEED 410	N
	5	74907-10600	MAT_FLOOR,REAR(VINYL)	1		4 SPEED,SS 410	
	6	74902-12402	CARPET_FLOOR,FRONT(RED)	1		R DRIVE 4 SPEED,SS 410	
	7	74902-14302	CARPET_FLOOR,FRONT(RED)	1		R DRIVE 4 SPEED,SS 410	N
	8	74902-12403	CARPET_FLOOR,FRONT(BLUE)	1		R DRIVE 4 SPEED,SS 410	
	9	74902-14303	CARPET_FLOOR,FRONT(BLUE)	1		R DRIVE 4 SPEED,SS 410	N
	10	74902-12404	CARPET_FLOOR,FRONT(BROWN)	1		R DRIVE 4 SPEED,SS 410	
	11	74902-14304	CARPET_FLOOR,FRONT(BROWN)	1		R DRIVE 4 SPEED,SS 410	N
	12	74902-12405	CARPET_FLOOR,FRONT(GREEN)	1		R DRIVE 4 SPEED,SS 410	

Printed in Japan

REVISED: SEPTEMBER,1968

S	KEY NO.	PART NO.	PART NAME	Q'TY	SALES UNIT	MODEL	ICA
	13	74902-14305	CARPET_FLOOR,FRONT(GREEN)	1		R DRIVE 4 SPEED,SS 410	N
	14	74902-12502	CARPET_FLOOR,FRONT(RED)	1		L DRIVE 4 SPEED 410	
	15	74902-14402	CARPET_FLOOR,FRONT(RED)	1		L DRIVE 4 SPEED 410	N
	16	74902-12503	CARPET_FLOOR,FRONT(BLUE)	1		L DRIVE 4 SPEED 410	
	17	74902-14403	CARPET_FLOOR,FRONT(BLUE)	1		L DRIVE 4 SPEED 410	N
	18	74902-12504	CARPET_FLOOR,FRONT(BROWN)	1		L DRIVE 4 SPEED 410	
	19	74902-14404	CARPET_FLOOR,FRONT(BROWN)	1	1	L DRIVE 4 SPEED 410	N
	20	74902-12505	CARPET_FLOOR,FRONT(GREEN)	1		L DRIVE 4 SPEED 410	
	21	74902-14405	CARPET_FLOOR,FRONT(GREEN)	1		L DRIVE 4 SPEED 410	N
	22	74907-11400	CARPET_FLOOR,REAR(RED)	1		4 SPEED,SS 410	
	23	74907-13600	CARPET_FLOOR,REAR(RED)	1		4 SPEED,SS 410	N
	24	74907-11401	CARPET_FLOOR,REAR(BLUE)	1		4 SPEED,SS 410	
	25	74907-13601	CARPET_FLOOR,REAR(BLUE)	1		4 SPEED,SS 410	N
	26	74907-11402	CARPET_FLOOR,REAR(BROWN)	1		4 SPEED,SS 410	
	27	74907-13602	CARPET_FLOOR,REAR(BROWN)	1		4 SPEED,SS 410	N
	28	74907-11403	CARPET_FLOOR,REAR(GREEN)	1		4 SPEED,SS 410	
	29	74907-13603	CARPET_FLOOR,REAR(GREEN)	1		4 SPEED,SS 410	N

Printed in Japan

REVISED: SEPTEMBER,1968

S	KEY NO.	PART NO.	PART NAME	Q'TY	SALES UNIT	MODEL	ICA
	30	74907-11800	CARPET_FLOOR,REAR(RED)	1		4 SPEED,SS 410	
	31	74907-14000	CARPET_FLOOR,REAR(RED)	1		4 SPEED,SS 410	N
	32	74907-11801	CARPET_FLOOR,REAR(BLUE)	1		4 SPEED,SS 410	
	33	74907-14001	CARPET_FLOOR,REAR(BLUE)	1		4 SPEED,SS 410	N
	34	74907-11802	CARPET_FLOOR,REAR(BROWN)	1		4 SPEED,SS 410	
	35	74907-14002	CARPET_FLOOR,REAR(BROWN)	1		4 SPEED,SS 410	N
	36	74907-11803	CARPET_FLOOR,REAR(GREEN)	1		4 SPEED,SS 410	
	37	74907-14003	CARPET_FLOOR,REAR(GREEN)	1	1	4 SPEED,SS 410	N
	38	74910-12400	INSULATOR_FLOOR,FRONT(R.H.)	1	1	4 SPEED 410	
	39	74911-12400	INSULATOR_FLOOR,FRONT(L.H.)	1	1	4 SPEED 410	
	40	74920-12400	BOARD_ASPHALT,FLOOR,FRONT(R.H.)	1	1	4 SPEED 410	
	41	74921-12400	BOARD_ASPHALT,FLOOR,FRONT(L.H.)	1		4 SPEED 410	
	42	74942-10900	PLUG(20)	1		4 SPEED 410	
	43	32869-03200	BOOT_RUBBER,CONTROL LEVER	1		4 SPEED,SS 410	
	44	74939-12400	PLUG_REVERSE LAMP SETTING HOLE	1	1	4 SPEED,SS 410	
	45	74942-04100	PLUG_RUBBER(25)	8		4 SPEED,SS 410	
	46	86350-00100	PLUG_DRAIN HOLE	2	5	4 SPEED,SS 410	

S	KEY NO.	PART NO.	PART NAME	Q'TY	SALES UNIT	MODEL	ICA
	47	32021-35000	PLUG_TRANSMISSION INSPECTION HOLE	2	5	4 SPEED,SS 410	
	48	64821-32200	PLUG_LOCATION HOLE(10)	4	50	4 SPEED,SS 410	

Printed in Japan

REVISED: SEPTEMBER,1968

NOTE

FRONT DOOR PANEL

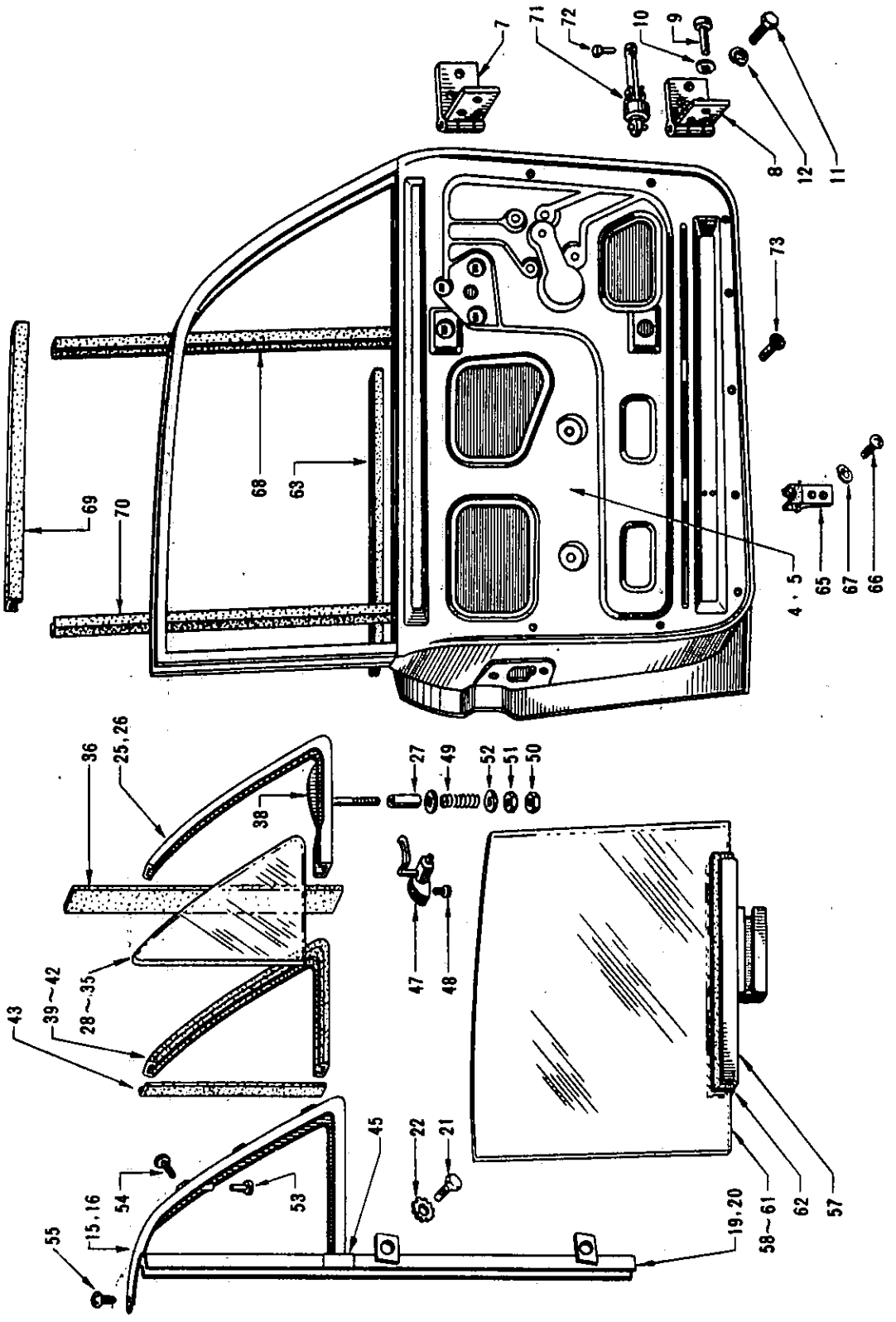

S	KEY NO.	PART NO.	PART NAME	Q'TY	SALES UNIT	MODEL	ICA
			FRONT DOOR PANEL				
	1	80100-10630	ASSY_PANEL,FRONT DOOR(R.H.)	1		410	
	2	80100-10631	ASSY_PANEL,FRONT DOOR(R.H.)(FROM SEPT.64)	1		410	N
	3	80212-11400	SET_COVER,SASH,FRONT D OOR(R.H.)	1	1	U.L.LU.DLN .UN.LN.LUN .& R DRIVE WAGON 410	
	4	80101-10630	ASSY_PANEL,FRONT DOOR(L.H.)	1		410	
	5	80101-10631	ASSY_PANEL,FRONT DOOR(L.H.)(FROM SEPT.64)	1		410	N
	6	80213-11400	SET_COVER,SASH,FRONT D OOR(L.H.)	1	1	U.L.LU.DLN .UN.LN.LUN .& R DRIVE WAGON 410	
	7	80400-10600	ASSY_HINGE,FRONT DOOR, UPPER	2		410	
	8	80402-10600	ASSY_HINGE,FRONT DOOR, LOWER	2	1	410	
	9	00620-81600	RIVET TO FIX HINGE	12	50	410	
*	10	00915-51500	WASHER_PLAIN TO FIX HI NGE	12	50	410	
	11	00114-51610	BOLT TO FIX HINGE TO F RONT PILLAR	12		410	
	12	00915-11510	WASHER_LOCK TO FIX HIN GE TO FRONT PILLAR	12		410	
	13	80270-10600	ASSY_FRAME,VENTILATOR(R.H.)	1		410	
	14	80270-10601	ASSY_FRAME,VENTILATOR(R.H.)	1		410	N

Printed in Japan

REVISED: SEPTEMBER,1968

S	KEY NO.	PART NO.	PART NAME	Q'TY	SALES UNIT	MODEL	ICA
	15	80271-10600	ASSY_FRAME,VENTILATOR(L.H.)	1		410	
	16	80271-10601	ASSY_FRAME,VENTILATOR(L.H.)	1		410	N
*	17	80220-10600	SASH_CENTER,FRONT DOOR (R.H.)	1		410	
	18	80220-10601	SASH_CENTER,FRONT DOOR (R.H.)	1	1	410	N
*	19	80221-10600	SASH_CENTER,FRONT DOOR (L.H.)	1		410	
	20	80221-10601	SASH_CENTER,FRONT DOOR (L.H.)	1	1	410	N
	21	00114-41010	BOLT TO FIX SASH CENTE R	4		410	
	22	00916-31410	WASHER_LOCK TO FIX SAS H CENTER	4	50	410	
	23	80250-10600	ASSY_CHANNEL,VENTILATO R GLASS(R.H.)	1		410	
	24	80250-10601	ASSY_CHANNEL,VENTILATO R GLASS(R.H.)	1		410	N
	25	80251-10600	ASSY_CHANNEL,VENTILATO R GLASS(L.H.)	1		410	
	26	80251-10601	ASSY_CHANNEL,VENTILATO R GLASS(L.H.)	1	1	410	N
	27	80263-10600	TUBE_DISTANCE,BOTTOM P IVOT	2	10	410	
*	28	80255-10600	GLASS_DOOR VENTILATOR(TOUGHENED)	2		U.410	
	29	80255-10601	GLASS_DOOR VENTILATOR(TOUGHENED)	2		U.410	N
	30	80255-11400	GLASS_DOOR VENTILATOR(TOUGHENED,ANTI_SUN)	2		R DRIVE WA GON 410	
*	31	80255-11401	GLASS_DOOR VENTILATOR(TOUGHENED,ANTI_SUN)	2		R DRIVE WA GON 410	N

Printed in Japan

REVISED: SEPTEMBER,1968

S	KEY NO.	PART NO.	PART NAME	Q'TY	SALES UNIT	MODEL	ICA
*	32	80255-10800	GLASS_DOOR VENTILATOR(SPECIALLY TOUGHENED)	2		L DRIVE 41 0	
*	33	80255-10802	GLASS_DOOR VENTILATOR(SPECIALLY TOUGHENED)	2		L DRIVE 41 0	N
*	34	80255-10801	GLASS_DOOR VENTILATOR(SPECIALLY TOUGHENED,AN TI_SUN)	2	1	L DRIVE 41 0	
*	35	80255-10803	GLASS_DOOR VENTILATOR(SPECIALLY TOUGHENED,AN TI_SUN)	2		L DRIVE 41 0	N
	36	80285-10600	RUBBER_GLAZING,VENTILA TOR	2	1	410	
	37	80256-10600	DRAIN_CHANNEL,VENTILAT OR(R.H.)	1		410	
	38	80257-10600	DRAIN_CHANNEL,VENTILAT OR(L.H.)	1		410	
	39	80241-10600	WEATHERSTRIP_VENTILATO R,FRONT(R.H.)	1		410	
	40	80241-10601	WEATHERSTRIP_VENTILATO R,FRONT(R.H.)	1		410	N
	41	80242-10600	WEATHERSTRIP_VENTILATO R,FRONT(L.H.)	1		410	
	42	80242-10601	WEATHERSTRIP_VENTILATO R,FRONT(L.H.)	1		410	N
	43	80243-10600	WEATHERSTRIP_VENTILATO R,REAR(R.H.)	1		410	
	44	80244-10600	WEATHERSTRIP_VENTILATO R,REAR(L.H.)	1	5	410	
	45	80233-10600	COVER_SASH,CENTER	2	5	410	
*	46	80206-10600	ASSY_HANDLE,CATCH,VENT ILATOR(R.H.)	1	1	410	
*	47	80207-10600	ASSY_HANDLE,CATCH,VENT ILATOR(L.H.)	1		410	
	48	80295-10600	RIVET(TO FIX CATCH HAN DLE)	4	5	410	

Printed in Japan

REVISED: SEPTEMBER,1968

S	KEY NO.	PART NO.	PART NAME	Q'TY	SALES UNIT	MODEL	ICA
	49	80247-32200	SPRING_DOOR VENTILATOR	2	10	410	
	50	00911-34410	NUT_LOCK	2		410	
	51	00911-14410	NUT	2		410	
	52	00915-41410	WASHER_PLAIN	4		410	
	53	00660-40620	RIVER(TO FIX PIVOT TOP & LOWER BRACKET)	2	50	410	
	54	00513-80720	SCREW	6	50	410	
	55	00310-80620	SCREW	4	50	410	
	56	80302-10600	ASSY_CHANNEL,BOTTOM,FRONT DOOR GLASS(R.H.)	1	1	410	
	57	80303-10600	ASSY_CHANNEL,BOTTOM,FRONT DOOR GLASS(L.H.)	1	1	410	
	58	80308-10600	GLASS_WINDOW,FRONT DOOR(TOUGHENED)	2		U.UN.410	
	59	80308-11400	GLASS_WINDOW,FRONT DOOR(TOUGHENED,ANTI_SUN)	2		RDRIVE WAGON 410	
*	60	80308-10800	GLASS_WINDOW,FRONT DOOR(SPECIALLY TOUGHENED)	2		L DRIVE 410	
*	61	80308-10801	GLASS_WINDOW,FRONT DOOR(SPECIALLY TOUGHENED, ANTI_SUN	2		L DRIVE 410	
	62	80312-10600	RUBBER_GLAZING,FRONT DOOR WINDOW	2	5	410	
*	63	80320-10600	ASSY_WEATHERSTRIP,FRONT DOOR WINDOW	2	2	410	
*	64	80320-10601	ASSY_WEATHERSTRIP,FRONT DOOR WINDOW	2	2	410	Y
	65	80315-10650	ASSY_SPPORT & CUSHION DOOR WINDOW	2	1	410	
	66	00314-01220	SCREW TO FIX SUPPORT	4	50	410	
	67	00915-11010	WASHER_LOCK TO FIX SUPPORT	4	100	410	
	68	80335-10600	RUBBER_GLASS RUN(A)	2	1	410	

Printed in Japan

REVISED: SEPTEMBER,1968

S	KEY NO.	PART NO.	PART NAME	Q'TY	SALES UNIT	MODEL	ICA
	69	80336-10600	RUBBER_GLASS RUN(B)	2	5	410	
*	70	80337-10600	RUBBER_GLASS RUN(C)	2	10	410	
*	71	80410-10600	ASSY_LINK,CHECK,DOOR	2	1	410	
	72	00660-51010	RIVET(TO FIX CHECK LIN K)	2	50	410	
	73	80929-32200	CAP_DOOR FINISH CLIP	18	1	410	
	74	80995-10600	RUBBER_DUST SEAL	4	50	410	

Printed in Japan

REVISED: SEPTEMBER,1968

NOTE

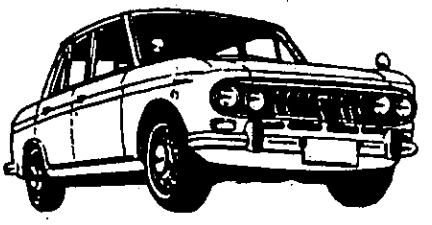

NOTE

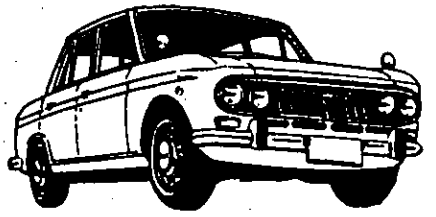

FRONT DOOR TRIMMING

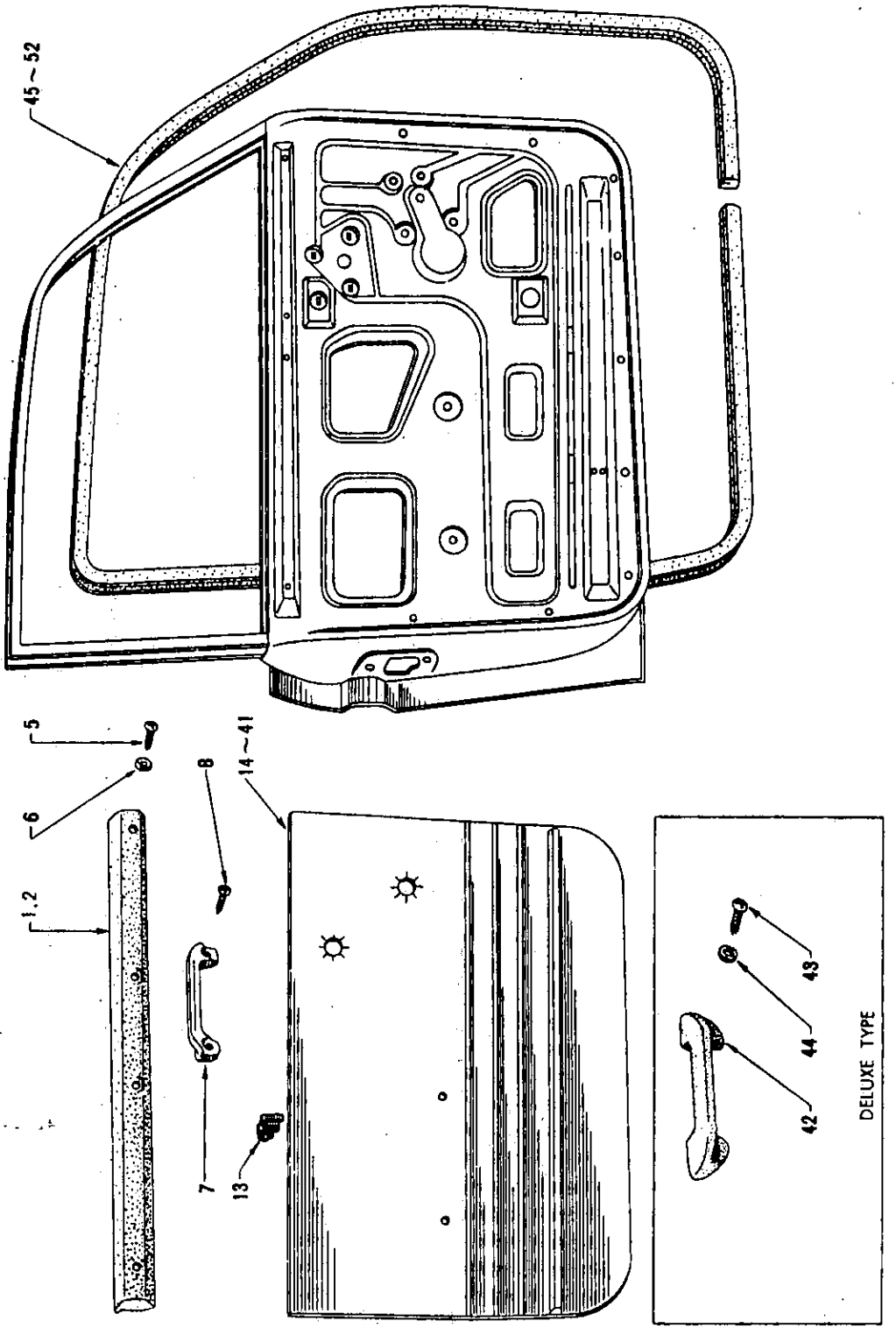

S	KEY NO.	PART NO.	PART NAME	QTY	SALES UNIT	MODEL	ICA
			FRONT DOOR TRIMMING				
*	1	80948-11400	ASSY_MOULDING,GARNISH, INSIDE(R.H.)	1		410	
	2	80948-11401	ASSY_MOULDING,GARNISH, INSIDE(R.H.)(FROM C/# P410233462)	1		410	N
*	3	80949-11400	ASSY_MOULDING,GARNISH, INSIDE(L.H.)	1		410	
	4	80949-11401	ASSY_MOULDING,GARNISH, INSIDE(L.H.)(FROM C/# P410233462)	1		410	N
	5	00530-60710	SCREW	4		SEDAN 410	
	6	80999-11100	WASHER_TRIM	4	50	SEDAN 410	
	7	80691-26261	HANDLE_PULL	2	2	WAGON 410	
	8	00314-01620	SCREW	4	50	WAGON 410	
	9	80900-11400	ASSY_FINISH,FRONT DOOR (R.H.)RED(#380)YELLOW(#386)	1		U.L.LU.UN. LN.LUN. 41 0	
	10	80900-11404	ASSY_FINISH,FRONT DOOR (R.H.)RED(#380)YELLOW(#386)	1		U.L.LU.UN. LN.LUN. 41 0	N
	11	80901-11400	ASSY_FINISH,FRONT DOOR (L.H.)RED(#380)YELLOW(#386)	1		U.L.LU.UN. LN.LUN. 41 0	
	12	80901-11404	ASSY_FINISH,FRONT DOOR (L.H.)RED(#380)YELLOW(#386)	1		U.L.LU.UN. LN.LUN. 41 0	N
	13	80919-32200	CLIP_TRIM PAD	18	10	410	
	14	80900-11600	ASSY_FINISH,FRONT DOOR (R.H.)RED(#380)YELLOW(#386)	1		410(A.B TY PE)	

Printed in Japan

REVISED: SEPTEMBER,1968

S	KEY NO.	PART NO.	PART NAME	Q'TY	SALES UNIT	MODEL	ICA
	15	80900-11604	ASSY_FINISH,FRONT DOOR (R.H.)RED(#380)YELLOW(#386)	1		410(A.B TYPE)	N
	16	80901-11600	ASSY_FINISH,FRONT DOOR (L.H.)RED(#380)YELLOW(#386)	1		410(A.B TYPE)	
	17	80901-11604	ASSY_FINISH,FRONT DOOR (L.H.)RED(#380)YELLOW(#386)	1	10	410(A.B TYPE)	N
	18	80900-11401	ASSY_FINISH,FRONT DOOR (R.H.)BLUE(#382,#383)			U.L.LU.UN.LN.LUN. 410	
	19	80900-11405	ASSY_FINISH,FRONT DOOR (R.H.)BLUE(#382,#383)			U.L.LU.UN.LN.LUN. 410	N
	20	80901-11401	ASSY_FINISH,FRONT DOOR (L.H.)BLUE(#382,#383)			U.L.LU.UN.LN.LUN. 410	
	21	80901-11405	ASSY_FINISH,FRONT DOOR (L.H.)BLUE(#382,#383)			U.L.LU.UN.LN.LUN. 410	N
	22	80900-11402	ASSY_FINISH,FRONT DOOR (R.H.)BROWN(#387)YELLOW(#386)			U.L.LU.UN.LN.LUN. 410	
	23	80900-11406	ASSY_FINISH,FRONT DOOR (R.H.)BROWN(#387)YELLOW(#386)			U.L.LU.UN.LN.LUN. 410	N
	24	80901-11402	ASSY_FINISH,FRONT DOOR (L.H.)BROWN(#387)YELLOW(#386)			U.L.LU.UN.LN.LUN. 410	
	25	80901-11406	ASSY_FINISH,FRONT DOOR (L.H.)BROWN(#387)YELLOW(#386)			U.L.LU.UN.LN.LUN. 410	N
	26	80900-11403	ASSY_FINISH,FRONT DOOR (R.H.)GREEN(#384,#385)			U.L.LU.UN.LN.LUN. 410	
	27	80900-11407	ASSY_FINISH,FRONT DOOR (R.H.)GREEN(#384,#385)			U.L.LU.UN.LN.LUN. 410	N

Printed in Japan

REVISED: SEPTEMBER,1968

S	KEY NO.	PART NO.	PART NAME	Q'TY	SALES UNIT	MODEL	ICA
	28	80901-11403	ASSY_FINISH,FRONT DOOR (L.H.)GREEN(#384,#385)			U.L.LU.UN. LN.LUN. 410	
	29	80901-11407	ASSY_FINISH,FRONT DOOR (L.H.)GREEN(#384,#385)			U.L.LU.UN. LN.LUN. 410	N
	30	80900-11601	ASSY_FINISH,FRONT DOOR (R.H.)BLUE(#382,#383)			410(A,B TYPE)	
	31	80900-11605	ASSY_FINISH,FRONT DOOR (R.H.)BLUE(#382,#383)			410(A,B TYPE)	N
	32	80901-11601	ASSY_FINISH,FRONT DOOR (L.H.)BLUE(#382,#383)			410(A,B TYPE)	
	33	80901-11605	ASSY_FINISH,FRONT DOOR (L.H.)BLUE(#382,#383)		10	410(A,B TYPE)	N
	34	80900-11602	ASSY_FINISH,FRONT DOOR (R.H.)BROWN(#387)YELLOW(#386)			410(A,B TYPE)	
	35	80900-11606	ASSY_FINISH,FRONT DOOR (R.H.)BROWN(#387)YELLOW(#386)			410(A,B TYPE)	N
	36	80901-11602	ASSY_FINISH,FRONT DOOR (L.H.)BROWN(#387)YELLOW(#386)			410(A,B TYPE)	
	37	80901-11606	ASSY_FINISH,FRONT DOOR (L.H.)BROWN(#387)YELLOW(#386)		1	410(A,B TYPE)	N
	38	80900-11603	ASSY_FINISH,FRONT DOOR (R.H.)GREEN(#384,#385)			410(A,B TYPE)	
	39	80900-11607	ASSY_FINISH,FRONT DOOR (R.H.)GREEN(#384,#385)			410(A,B TYPE)	N
	40	80901-11603	ASSY_FINISH,FRONT DOOR (L.H.)GREEN(#384,#385)			410(A,B TYPE)	
	41	80901-11607	ASSY_FINISH,FRONT DOOR (L.H.)GREEN(#384,#385)			410(A,B TYPE)	N
*	42	80940-11400	COMP._ARM REST(BLACK)	2	4	410	
	43	00414-43010	SCREW TO FIX ARM REST	4	50	410	

Printed in Japan

REVISED: SEPTEMBER,1968

S	KEY NO.	PART NO.	PART NAME	Q'TY	SALES UNIT	MODEL	ICA
	44	00915-11410	WASHER_LOCK TO FIX ARM REST	4		410	
*	45	76800-10600	ASSY_WEATHERSTRIP,FRONT DOOR(R.H.)(UP TO C/# 4410000199)(UP TO C/# 4P410003499)	1		410	
*	46	76800-10601	ASSY_WEATHERSTRIP,FRONT DOOR(R.H.)(FROM C/# 4410000200)(FROM C/# 4P410003500)	1		410	N
*	47	76800-10603	ASSY_WEATHERSTRIP,FRONT DOOR(R.H.)(FROM C/# 4410056136)	1		410	Y
*	48	76800-10604	ASSY_WEATHERSTRIP,FRONT DOOR(R.H.)	1	1	410	N
*	49	76801-10600	ASSY_WEATHERSTRIP,FRONT DOOR(L.H.)(UP TO C/# 4410000199)(UP TO C/# 4P410003499)	1		410	
*	50	76801-10601	ASSY_WEATHERSTRIP,FRONT DOOR(L.H.)(FROM C/# 4410000200)(FROM C/# 4P410003500)	1	1	410	N
*	51	76801-10603	ASSY_WEATHERSTRIP,FRONT DOOR(L.H.)	1		410	Y
*	52	76801-10604	ASSY_WEATHERSTRIP,FRONT DOOR(L.H.)	1	1	410	N

Printed in Japan

REVISED: SEPTEMBER,1968

NOTE

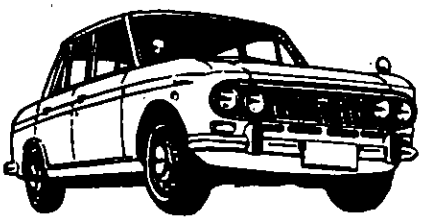

FRONT DOOR LOCK & REGULATOR

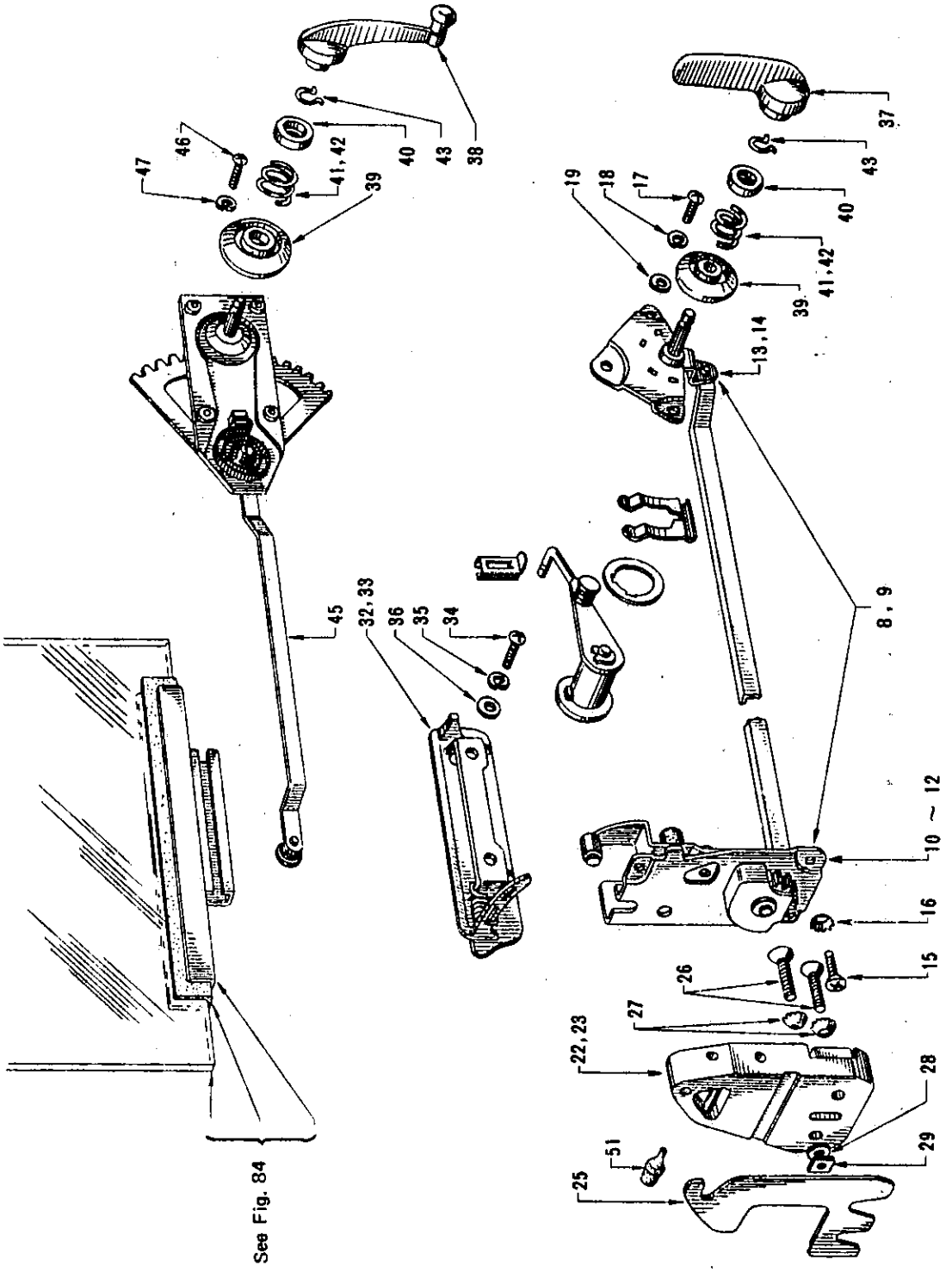

S	KEY NO.	PART NO.	PART NAME	Q'TY	SALES UNIT	MODEL	ICA
			FRONT DOOR LOCK & REGULATOR				
*	1	80500-10600	ASSY_LOCK & REMOTE CONTROL,FRONT DOOR(R.H.)	1		410	
*	2	80500-10601	ASSY_LOCK & REMOTE CONTROL,FRONT DOOR(R.H.)	1	1	410	Y
*	3	80502-10600	ASSY_LOCK,FRONT DOOR(R.H.)	1		410	
*	4	80502-10601	ASSY_LOCK,FRONT DOOR(R.H.)	1	1	410	Y
	5	80502-10602	ASSY_LOCK,FRONT DOOR(R.H.)	1	1	410	Y
*	6	80504-10600	ASSY_REMOTE CONTROL(R.H.)	1	1	410	
	7	80504-10601	ASSY_REMOTE CONTROL(R.H.)	1	1	410	Y
*	8	80501-10600	ASSY_LOCK & REMOTE CONTROL,FRONT DOOR(L.H.)	1		410	
*	9	80501-10601	ASSY_LOCK & REMOTE CONTROL,FRONT DOOR(L.H.)	1	1	410	Y
*	10	80503-10600	ASSY_LOCK,FRONT DOOR(L.H.)	1		410	
*	11	80503-10601	ASSY_LOCK,FRONT DOOR(L.H.)	1	1	410	Y
	12	80503-10602	ASSY_LOCK,FRONT DOOR(L.H.)	1	1	410	Y
*	13	80505-10600	ASSY_REMOTE CONTROL(L.H.)	1	1	410	
	14	80505-10601	ASSY_REMOTE CONTROL(L.H.)	1	1	410	Y
	15	00324-00810	SCREW TO FIX LOCK TO DOOR	6	50	410	

S	KEY NO.	PART NO.	PART NAME	Q'TY	SALES UNIT	MODEL	ICA
	16	00916-41010	WASHER_LOCK TO FIX LOCK TO DOOR	6		410	
	17	00314-00810	SCREW TO FIX REMOTE CONTROL TO DOOR	6	50	410	
	18	00915-11010	WASHER_LOCK TO FIX REMOTE CONTROL TO DOOR	6	100	410	
	19	00915-41010	WASHER_PLAIN TO FIX REMOTE CONTROL TO DOOR	6		410	
*	20	80570-10600	ASSY_STRIKER,DOOR LOCK (R.H.)	1	5	410	
	21	80570-10602	ASSY_STRIKER,DOOR LOCK (R.H.)	1	1	410	Y
*	22	80571-10600	ASSY_STRIKER,DOOR LOCK (L.H.)	1	5	410	
	23	80571-10602	ASSY_STRIKER,DOOR LOCK (L.H.)	1	1	410	Y
	24	80585-35000	BUMPER_RUBBER	2	1	410	
	25	80630-10601	SHIM_ADJUSTING,DOOR LOCK STRIKER	AR	5	410	
	26	00324-43010	SCREW TO FIX STRIKAR TO PILLAR	4	50	410	
	27	00916-41410	WASHER_LOCK TO FIX STRIKAR TO PILLAR	4		410	
	28	00915-51410	WASHER_PLAIN TO FIX STRIKAR TO PILLAR	2		410	
	29	80631-10600	NUT TO FIX STRIKAR TO PILLAR	2		410	
	30	80605-10601	ASSY_HANDLE,DOOR OUTSIDE,FRONT(R.H.)	1	2	410	
	31	80605-10602	ASSY_HANDLE,DOOR OUTSIDE,FRONT(R.H.)(FROM 649)	1		410	N
*	32	80606-10601	ASSY_HANDLE,DOOR OUTSIDE,FRONT(L.H.)	1	1	410	

Printed in Japan

REVISED: SEPTEMBER,1968

S	KEY NO.	PART NO.	PART NAME	Q'TY	SALES UNIT	MODEL	ICA
	33	80606-10602	ASSY_HANDLE,DOOR OUTSIDE,FRONT(L.H.)(FROM 649)	1	1	410	N
	34	00314-01210	SCREW TO FIX HANDLE	4	50	410	
	35	00915-11010	WASHER_LOCK TO FIX HANDLE	4	100	410	
	36	00915-41010	WASHER_PLAIN TO FIX HANDLE	4		410	
	37	80672-32200	HANDLE_DOOR,INSIDE	2	2	410	
	38	80760-10600	ASSY_HANDLE,DOOR WINDOW REGULATOR	2	2	410	
	39	80675-10600	ESCUTCHEON_DOOR HANDLE	4	2	410	
	40	80676-10400	CROWN_ESCUTCHEON	4	2	410	
*	41	80674-10600	SPRING_ESCUTCHEON	4	10	410	
	42	80674-10601	SPRING_ESCUTCHEON	4	50	410	Y
	43	80673-32200	SPRING_RETAINING,HANDLE	4	10	410	
	44	80700-10600	ASSY_REGULATOR,FRONT DOOR(R.H.)	1	1	410	
	45	80701-10600	ASSY_REGULATOR,FRONT DOOR(L.H.)	1	1	410	
	46	00314-41010	SCREW TO FIX REGULATOR	8	50	410	
	47	00915-11410	WASHER_LOCK TO FIX REGULATOR	8		410	
	48	80600-10600	ASSY_CYLINDER,DOOR LOCK(R.H.)	1		410	
	49	80601-10600	ASSY_CYLINDER,DOOR LOCK(L.H.)	1	1	410	
	50	80590-10601	CLIP_RETAINING,CYLINDER LOCK	2	10	410	
	51	80585-35000	BUMPER_RUBBER	2	1	410	

Printed in Japa.

REVISED: SEPTEMBER,1968

NOTE

NOTE

REAR DOOR PANEL

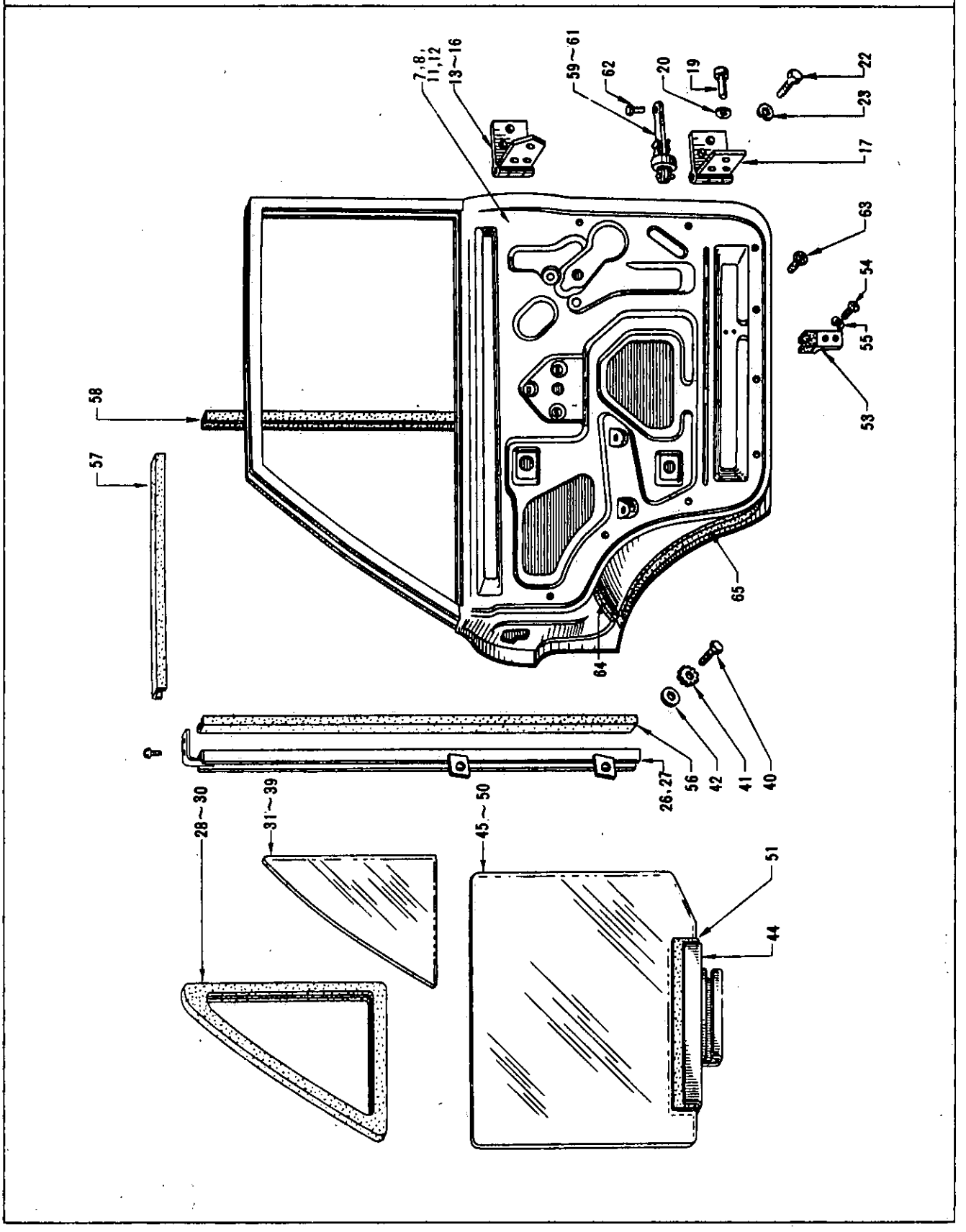

S	KEY NO.	PART NO.	PART NAME	Q'TY	SALES UNIT	MODEL	ICA
			REAR DOOR PANEL				
	1	82100-10630	ASSY_PANEL,REAR DOOR(R.H.)(UP TO C# 4410000199)(UP TO C# 4P410003499)	1	1	410	
	2	82100-10631	ASSY_PANEL,REAR DOOR(R.H.)(FROM C# 4410000199)(FROM C# 4P410003499)	1		410	N
	3	82212-11400	SET_COVER,REAR DOOR(R.H.)	1	1	DLN.410	
	4	82210-10901	ASSY_SASH,REAR DOOR(R.H.)	1		WAGON 410	
	5	82100-10930	ASSY_PANEL,REAR DOOR(R.H.)	1		R DRIVE WAGON 410	
	6	82100-11030	ASSY_PANEL,REAR DOOR(R.H.)	1	1	L DRIVE WAGON 410	
	7	82101-10630	ASSY_PANEL,REAR DOOR(L.H.)(UP TO C# 4410000199)(UP TO C# 4P410003499)	1	1	410	
	8	82101-10631	ASSY_PANEL,REAR DOOR(L.H.)(FROM C# 4410000200)(FROM C# 4P410003500)	1		410	N
	9	82213-11400	SET_COVER,REAR DOOR(L.H.)	1	1	DLN.410	
	10	82211-10901	ASSY_SASH,REAR DOOR(L.H.)	1		WAGON 410	
	11	82101-10930	ASSY_PANEL,REAR DOOR(L.H.)	1		R DRIVE WAGON 410	
	12	82101-11030	ASSY_PANEL,REAR DOOR(L.H.)	1	1	L DRIVE WAGON 410	

Printed in Japan

REVISED: SEPTEMBER,1968

S	KEY NO.	PART NO.	PART NAME	Q'TY	SALES UNIT	MODEL	ICA
	13	82400-10600	ASSY_HINGE,REAR DOOR,UPPER(UP TO C# 4410000199)(UP TO C# 4P410003500)	2	1	410	
	14	82400-10601	ASSY_HINGE,REAR DOOR,UPPER(FROM C# 4410000200)(FROM C# 4P410003500)	2	1	410	N
	15	82402-10600	ASSY_HINGE,REAR DOOR,LOWER(R.H.)(UP TO C# 4410000199)(UP TO C# 4P410003499)	1	1	410	
	16	82402-10601	ASSY_HINGE,REAR DOOR,LOWER(R.H.)(FROM C# 4410000200)(FROM C# 4P410003500)	1	1	410	N
	17	82403-10600	ASSY_HINGE,REAR DOOR LOWER(L.H.)(UP TO C# 4410000199)(UP TO C# 4P410003499)	1	2	410	
	18	82403-10601	ASSY_HINGE,REAR DOOR LOWER(L.H.)(FROM C# 4410000200)(FROM C# 4P410003499)	1		410	N
	19	00620-81600	RIVET TO FIX HINGE	6	50	410	
*	20	00915-51500	WASHER_PLAIN TO FIX HINGE	6	50	410	
	21	80451-10600	SHIM_DOOR HINGE,UPPER(FROM C# 4410000200)(FROM C# 4P410003499)	AR	1	410	
	22	00114-52010	BOLT TO FIX HINGE TO CENTER PILLER	12		410	
	23	00915-11510	WASHER_LOCK TO FIX HINGE TO CENTER PILLER	12		410	
	24	82220-10600	ASSY_SASH CENTER,REAR,DOOR(R.H.)	1	1	SEDAN 410	
	25	82220-10900	ASSY_SASH,CENTER,REAR DOOR(R.H.)	1		WAGON 410	

Printed in Japan

REVISED: SEPTEMBER,1968

S	KEY NO.	PART NO.	PART NAME	Q'TY	SALES UNIT	MODEL	ICA
	26	82221-10600	ASSY_SASH,CENTER,REAR DOOR(L.H.)	1	1	SEDAN 410	
	27	82221-10900	ASSY_SASH,CENTER,REAR DOOR(L.H.)	1		WAGON 410	
*	28	82241-10600	WEATHERSTRIP_REAR DOOR PARTITION(UP TO C# 4410000199)(UP TO C# 4P410003499)	2	1	SEDAN 410	
	29	82241-10601	WEATHERSTRIP_REAR DOOR PARTITION(FROM C# 4410000200)(FROM C# 4P410003500)	2	1	SEDAN 410	N
*	30	82241-10900	WEATHERSTRIP_REAR DOOR PARTITION	2	1	WAGON 410	
	31	82255-10600	GLASS_REAR DOOR PARTITION(TOUGHENED)(UP TO C# 4410000199)(UP TO C# 4P410003499)	2		U,UN.410	
	32	82255-10601	GLASS_REAR DOOR PARTITION(TOUGHENED)(FROM C# 4410000200)(FROM C# 4P410003500)	2		U,UN.410	N
*	33	82255-10800	GLASS_REAR DOOR PARTITION(SPECIALLY TOUGHENED)(UP TO C#4410000199)(UP TO C# 4P410003499)	2		SEDAN 410	
	34	82255-10801	GLASS_REAR DOOR PARTITION(SPECIALLY TOUGHENED,ANTI_SUN)	2		SEDAN 410	C
*	35	82255-10802	GLASS_REAR DOOR PARTITION(SPECIALLY TOUGHENED)	2		SEDAN 410	
*	36	82255-10803	GLASS_REAR DOOR PARTITION(SPECIALLY TOUGHENED,ANTI_SUN)(FROM C# 4410000200)(FROM C# 4P410003500)	2		SEDAN 410	C
	37	82255-10900	GLASS_REAR DOOR PARTITION(TOUGHENED,ANTI_SUN)	2		R DRIVE WAGON 410	

Printed in Japan

REVISED: SEPTEMBER,1968

S	KEY NO.	PART NO.	PART NAME	Q'TY	SALES UNIT	MODEL	ICA
*	38	82255-11000	GLASS_REAR PARTITION(SPECIALLY TOUGHENED)	2		L DRIVE WAGON 410	
	39	82255-11001	GLASS_REAR DOOR PARTITION(SPECIALLY TOUGHENED,ANTI_SUN)	2		L DRIVE WAGON 410	
	40	00114-41010	BOLT TO FIX CENTER SASH	2		410	
	41	00916-31410	WASHER_LOCK TO FIX CENTER SASH	2	50	410	
	42	00310-80620	SCREW TO FIX CENTER SASH	2	50	410	
	43	82302-10600	ASSY_CHANNEL,BOTTOM,REAR DOOR GLASS(R.H.)	1	1	410	
*	44	82303-10600	ASSY_CHANNEL,BOTTOM,REAR DOOR GLASS(L.H.)	1	1	410	
	45	82308-10600	GLASS_WINDOW,REAR DOOR (TOUGHENED)	2		U.UN.410	
*	46	82308-10800	GLASS_WINDOW,REAR DOOR (SPECIALLY TOUGHENED)	2		SEDAN 410	
*	47	82308-10801	GLASS_WINDOW,REAR DOOR (SPECIALLY TOUGHENED,ANTI-SUN)	2		SEDAN 410	
	48	82308-10900	GLASS_WINDOW,REAR DOOR (TOUGHENED,ANTI_SUN)	2		R DRIVE WAGON 410	
*	49.	82308-11000	GLASS_WINDOW,REAR DOOR (SPECIALLY TOUGHENED)	2		L DRIVE WAGON 410	
*	50	82308-11001	GLASS_WINDOW,REAR DOOR (SPECIALLY TOUGHENED,ANTI_SUN)	2		L DRIVE WAGON 410	
	51	82312-10600	RUBBER_GLAZING,REAR DOOR WINDOW	2		410	
*	52	82320-10600	ASSY_WEATHERSTRIP,REAR DOOR WINDOW	2		410	
	53	80315-10650	ASSY_SUPPORT & CUSHION ,DOOR WINDOW	2	1	410	
	54	00314-01220	SCREW TO FIX SUPPORT	4	50	410	

Printed in Japan

REVISED: SEPTEMBER,1968

S	KEY NO.	PART NO.	PART NAME	Q'TY	SALES UNIT	MODEL	ICA
	55	00915-11010	WASHER_LOCK TO FIX SUPPORT	4	100	410	
*	56	82335-10600	RUBBER_GLASS RUN(D)	2	5	410	
	57	82336-10600	RUBBER_GLASS RUN(E)	2	5	410	
*	58	82337-10600	RUBBER_GLASS RUN(F)	2	5	410	
	59	82410-10600	ASSY_LINK,CHECK,DOOR(UP TO C# 4410000199)(UP TO C# 4P410003499)	2	10	410	
*	60	82410-10602	ASSY_LINK,CHECK,DOOR(FROM C# 4410000200)(FROM C# 4P4P410003500)	2		410	N
	61	82410-10601	ASSY_LINK,CHECK,DOOR	2		410	Y
	62	00660-51010	RIVET(TO FIX CHECK LINK)	2	50	410	
	63	80929-32200	CAP_DOOR FINISH CLIP	18	1	410	
	64	82976-10600	SEAL_RUBBER,REAR DOOR, UPPER	2	1	410	
	65	82975-10600	SEAL_RUBBER,REAR DOOR, LONG	2		410	

Printed in Japan

REVISED: SEPTEMBER,1968

NOTE

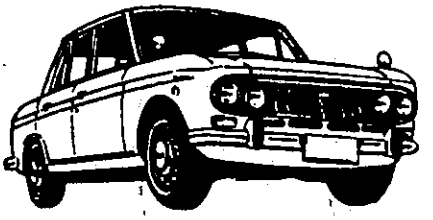

NOTE

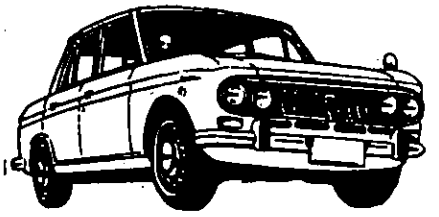

REAR DOOR TRIMMING

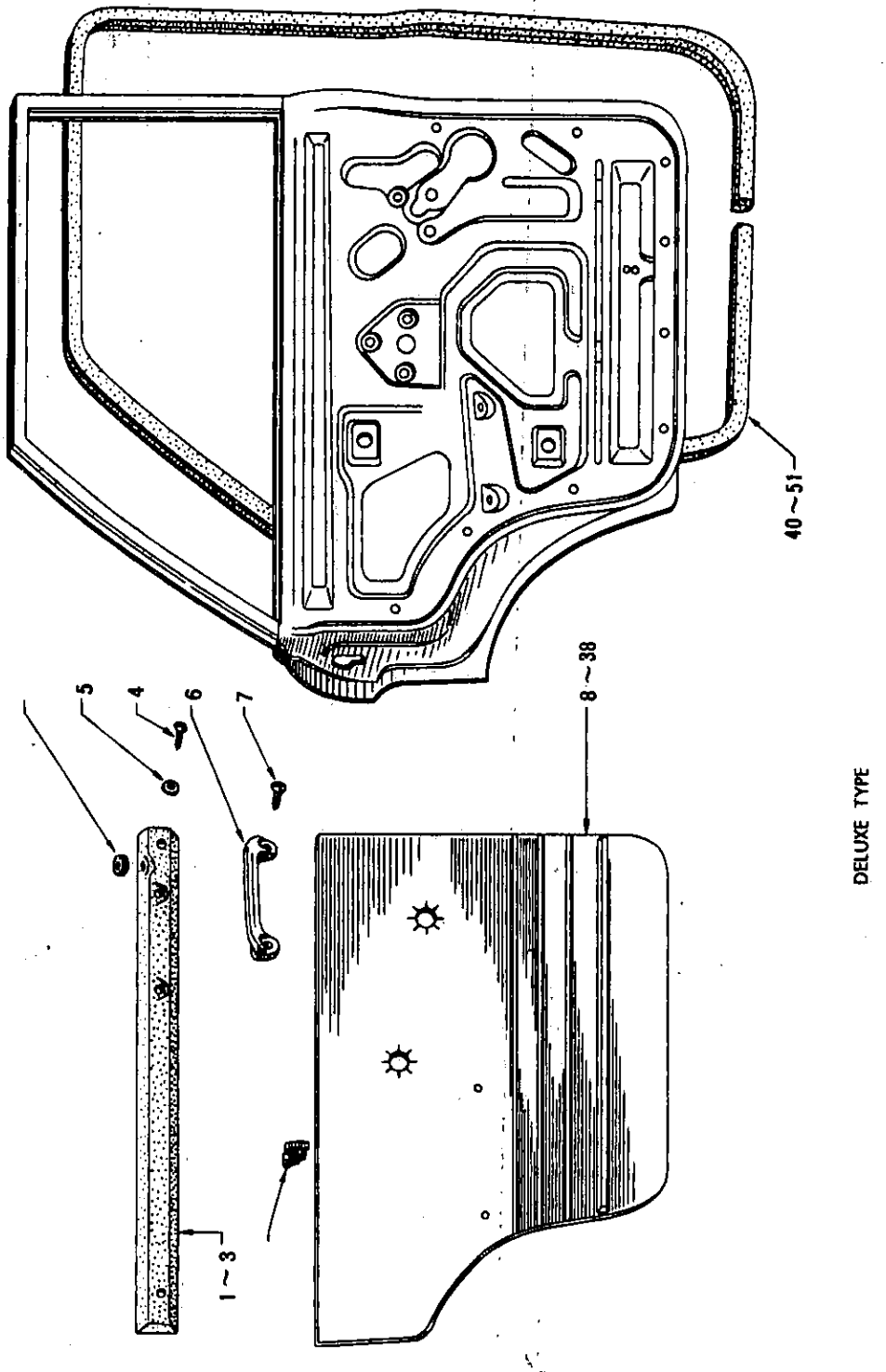

S	KEY NO.	PART NO.	PART NAME	Q'TY	SALES UNIT	MODEL	ICA
			REAR DOOR TRIMMING				
	1	82948-10601	ASSY_MOULDING,GARNISH, REAR DOOR INSIDE(R.H.) (FROM C/# P410233439)	1		410	N
*	2	82949-10600	ASSY_MOULDING,GARNISH, REAR DOOR INSIDE(L.H.)	1		410	
	3	80949-10601	ASSY_MOULDING,GARNISH, REAR DOOR INSIDE(L.H.) (FROM C/# P410233439)	1		410	N
	4	00530-60710	SCREW TO FIX GARNISH M OULDING	4		410	
	5	80999-11100	WASHER_TRIM TO FIX GAR NISH MOULDING	4	50	410	
	6	80691-26261	HANDLE_PULL	2	2	410	
	7	00314-01620	SCREW	4	50	410	
	8	82900-10600	ASSY_FINISH,REAR DOOR(R.H.)RED(#380),YELLOW(#386)	1		410(A.B.TY PE)	
	9	82900-10603	ASSY_FINISH,REAR DOOR(R.H.)RED(#380),YELLOW(#386)	1		410	N
	10	82901-10600	ASSY_FINISH,REAR DOOR(L.H.)RED(#380),YELLOW(#386)	1		410(A.B.TY PE)	
	11	82900-10900	ASSY_FINISH,REAR DOOR(R.H.)RED(#380),YELLOW(#386)	1		410(D TYPE)	
	12	82900-10904	ASSY_FINISH,REAR DOOR(R.H.)RED(#380),YELLOW(#386)	1		410(D TYPE)	N
	13	82901-10900	ASSY_FINISH,REAR DOOR(L.H.)RED(#380),YELLOW(#386)	1		410(D TYPE)	

Printed in Japan

REVISED: SEPTEMBER,1968

S	KEY NO.	PART NO.	PART NAME	Q'TY	SALES UNIT	MODEL	ICA
	14	82901-10904	ASSY_FINISH,REAR DOOR(L.H.)RED(#380),YELLOW(#386)	1	1	410(D TYPE)	N
	15	82900-10601	ASSY_FINISH,REAR DOOR(R.H.)BLUE(#382,#383)	1		410(A.B.TYPE)	
	16	82900-10604	ASSY_FINISH,REAR DOOR(R.H.)BLUE(#382,#383)	1		410(A.B.TYPE)	N
	17	82901-10601	ASSY_FINISH,REAR DOOR(L.H.)BLUE(#382,#383)	1		410(A.B.TYPE)	
	18	82901-10604	ASSY_FINISH,REAR DOOR(L.H.)BLUE(#382,#383)	1		410(A.B.TYPE)	N
	19	82900-10602	ASSY_FINISH,REAR DOOR(R.H.)GREEN(#384,#385)	1		410(A.B.TYPE)	
	20	82900-10605	ASSY_FINISH,REAR DOOR(R.H.)GREEN(#384,#385)	1		410(A.B.TYPE)	N
	21	82901-10602	ASSY_FINISH,REAR DOOR(L.H.)GREEN(#384,#385)	1		410(A.B.TYPE)	
	22	82901-10605	ASSY_FINISH,REAR DOOR(L.H.)GREEN(#384,#385)	1		410(A.B.TYPE)	N
	23	82900-11600	ASSY_FINISH,REAR DOOR(R.H.)BROWN(#387),YELLOW(#386)	1	1	410(A.B.TYPE)	
*	24	82900-11601	ASSY_FINISH,REAR DOOR(R.H.)BROWN(#387),YELLOW(#386)	1		410(A.B.TYPE)	N
	25	82901-11600	ASSY_FINISH,REAR DOOR(L.H.)BROWN(#387),YELLOW(#386)	1	1	410(A.B.TYPE)	
	26	82901-11601	ASSY_FINISH,REAR DOOR(L.H.)BROWN(#387),YELLOW(#386)	1	1	410(A.B.TYPE)	N
	27	82900-10901	ASSY_FINISH,REAR DOOR(R.H.)BLUE(#382,#383)			410(D TYPE)	
	28	82900-10905	ASSY_FINISH,REAR DOOR(R.H.)BLUE(#382,#383)			410(D TYPE)	N
	29	82901-10901	ASSY_FINISH,REAR DOOR(L.H.)BLUE(#382,#383)			410(D TYPE)	

Printed in Japan

REVISED: SEPTEMBER,1968

S	KEY NO.	PART NO.	PART NAME	Q'TY	SALES UNIT	MODEL	ICA
	30	82901-10905	ASSY_FINISH,REAR DOOR(L.H.)BLUE(#382,#383)		1	410(D TYPE)	N
	31	82900-10902	ASSY_FINISH,REAR DOOR(R.H.)BROWN(#387),YELLOW(#386)			410(D TYPE)	
	32	82900-10906	ASSY_FINISH,REAR DOOR(R.H.)BROWN(#387),YELLOW(#386)			410(D TYPE)	N
	33	82901-10902	ASSY_FINISH,REAR DOOR(L.H.)BROWN(#387),YELLOW(#386)			410(D TYPE)	
	34	82901-10906	ASSY_FINISH,REAR DOOR(L.H.)BROWN(#387),YELLOW(#386)		1	410(D TYPE)	N
	35	82900-10903	ASSY_FINISH,REAR DOOR(R.H.)GREEN(#384,#385)			410(D TYPE)	
	36	82900-10907	ASSY_FINISH,REAR DOOR(R.H.)GREEN(#384,#385)		1	410(D TYPE)	N
	37	82901-10903	ASSY_FINISH,REAR DOOR(L.H.)GREEN(#384,#385)		1	410(D TYPE)	
	38	82901-10907	ASSY_FINISH,REAR DOOR(L.H.)GREEN(#384,#385)		1	410(D TYPE)	N
	39	82963-10600	GROMMET_DOOR INSIDE KNOB	2	20	410	
*	40	76802-10600	ASSY_WEATHERSTRIP,REAR DOOR(R.H.)(UP TO C/# 4410000199)(UP TO C/# 4P41000349)	1	5	410	
*	41	76802-10601	ASSY_WEATHERSTRIP,REAR DOOR(R.H.)(FROM C/# 4410000200)(FROM C/# 4P410003500)	1	1	410	N
*	42	76802-10603	ASSY_WEATHERSTRIP,REAR DOOR(R.H.)(FROM C/# 4410056136)	1	1	410	Y
*	43	76802-10604	ASSY_WEATHERSTRIP,REAR DOOR(R.H.)	1		410	N

Printed in Japan

REVISED: SEPTEMBER,1968

S	KEY NO.	PART NO.	PART NAME	Q'TY	SALES UNIT	MODEL	ICA
*	44	76802-10902	ASSY_WEATHERSTRIP,REAR DOOR(R.H.)	1		WAGON 410	
	45	76802-10903	ASSY_WEATHERSTRIP,REAR DOOR(R.H.)	1		WAGON 410	Y
*	46	76803-10600	ASSY_WEATHERSTRIP,REAR DOOR(L.H.)(UP TO C/# 441000199)(UP TO C/# 4P41000349)	1		410	
*	47	76803-10601	ASSY_WEATHERSTRIP,REAR DOOR(L.H.)(FROM C/# 4410000200)(FROM C/# 4P410003500)	1		410	N
*	48	76803-10603	ASSY_WEATHERSTRIP,REAR DOOR(L.H.)(FROM C/# 410056136)	1		410	Y
*	49	76803-10604	ASSY_WEATHERSTRIP,REAR DOOR(L.H.)	1		410	N
*	50	76803-10902	ASSY_WEATHERSTRIP,REAR DOOR(L.H.)	1		WAGON 410	
	51	76803-10903	ASSY_WEATHERSTRIP,REAR DOOR(L.H.)	1		WAGON 410	Y
	52	76805-10601	SPACER_WEATHERSTRIP(FROM C/# 4410000200)(FROM C/# 4P410003500)	8		410	

Printed in Japan

REVISED: SEPTEMBER,1968

NOTE

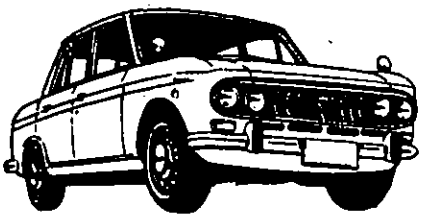

NOTE

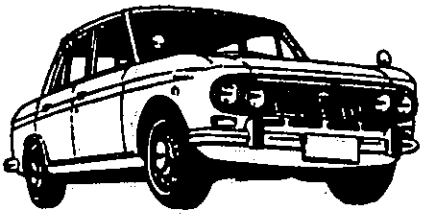

S	KEY NO.	PART NO.	PART NAME	Q'TY	SALES UNIT	MODEL	ICA
			REAR DOOR LOCK & REGULATOR				
	1	82500-10600	ASSY_LOCK & REMOTE CONTROL,REAR DOOR(R.H.)	1	1	410	
	2	82502-10600	ASSY_LOCK,REAR DOOR(R.H.)	1	1	410	
	3	82504-10600	ASSY_REMOTE CONTROL(R.H.)	1	1	410	
	4	82501-10600	ASSY_LOCK & REMOTE CONTROL,REAR DOOR(L.H.)	1	1	410	
	5	82503-10600	ASSY_LOCK,REAR DOOR(L.H.)	1	1	410	
	6	82505-10600	ASSY_REMOTE CONTROL(L.H.)	1	1	410	
	7	80595-36700	KNOB_HANDLE	2	10	410	
	8	00324-00810	SCREW TO FIX LOCK TO DOOR	6	50	410	
	9	00916-41010	WASHER_LOCK TO FIX LOCK TO DOOR	6		410	
	10	00314-00810	SCREW TO FIX REMOTE CONTROL TO DOOR	6	50	410	
	11	00915-11010	WASHER_LOCK TO FIX REMOTE CONTROL TO DOOR	6	100	410	
	12	00915-41010	WASHER_PLAIN TO FIX REMOTE CONTROL TO DOOR	6		410	
	13	00324-00810	SCREW TO FIX BELL CRANK TO DOOR	4	50	410	
	14	00916-41010	WASHER_LOCK TO FIX BELL CRANK TO DOOR	4		410	
*	15	80570-10600	ASSY_STRIKER,DOOR LOCK (R.H.)	1	5	410	
	16	80570-10602	ASSY_STRIKER,DOOR LOCK (R.H.)	1	1	410	Y

Printed in Japan

REVISED: SEPTEMBER,1968

S	KEY NO.	PART NO.	PART NAME	Q'TY	SALES UNIT	MODEL	ICA
*	17	80571-10600	ASSY_STRIKER,DOOR LOCK (L.H.)	1	5	410	
	18	80571-10602	ASSY_STRIKER,DOOR LOCK (L.H.)	1	1	410	Y
	19	80585-35000	BUMPER_RUBBER	2	1	410	
	20	80630-10600	SHIM_ADJUSTING	AR	10	410	
	21	00324-43010	SCREW TO FIX STRIKER T O PILLEAR	4	50	410	
	22	00916-41410	WASHER_LOCK TO FIX STR IKER TO PILLEAR	4		410	
	23	82605-10601	ASSY_HANDLE,DOOR OUTSI DE,REAR(R.H.)	1	1	410	
	24	82606-10601	ASSY_HANDLE,DOOR OUTSI DE,REAR(L.H.)	1	2	410	
	25	00314-01210	SCREW TO FIX HANDLE	4	50	410	
	26	00915-11010	WASHER_LOCK TO FIX HAN DLE	4	100	410	
	27	00915-41010	WASHER_PLAIN TO FIX HA NDLE	4		410	
	28	80672-32200	HANDLE_DOOR INSIDE	2	2	410	
	29	80760-10600	ASSY_HANDLE,DOOR WINDO W REGULATOR	2	2	410	
	30	80675-10600	ESCUTCHEON_DOOR HANDLE	4	2	410	
	31	80676-10400	CROWN_ESCUTCHEON	4	2	410	
*	32	80674-10600	SPRING_ESCUTCHEON	4	10	410	
	33	80674-10601	SPRING_ESCUTCHEON	4	50	410	Y
	34	80673-32200	SPRING_RETAINING,HANDL E	4	10	410	
	35	82700-10600	ASSY_REGULATOR,REAR DO OR(R.H.)	1		410	
	36	82701-10600	ASSY_REGULATOR,REAR DO OR(L.H.)	1	1	410	

Printed in Japan

REVISED: SEPTEMBER,1968

S	KEY NO.	PART NO.	PART NAME	Q'TY	SALES UNIT	MODEL	ICA
	37	00314-41010	SCREW TO FIX REGULATOR TO DOOR	8	50	410	
	38	00915-11410	WASHER_SPRING TO FIX REGULATOR TO DOOR	8		410	

Printed in Japan

REVISED: SEPTEMBER,1968

REAR DOOR LOCK & REGULATOR

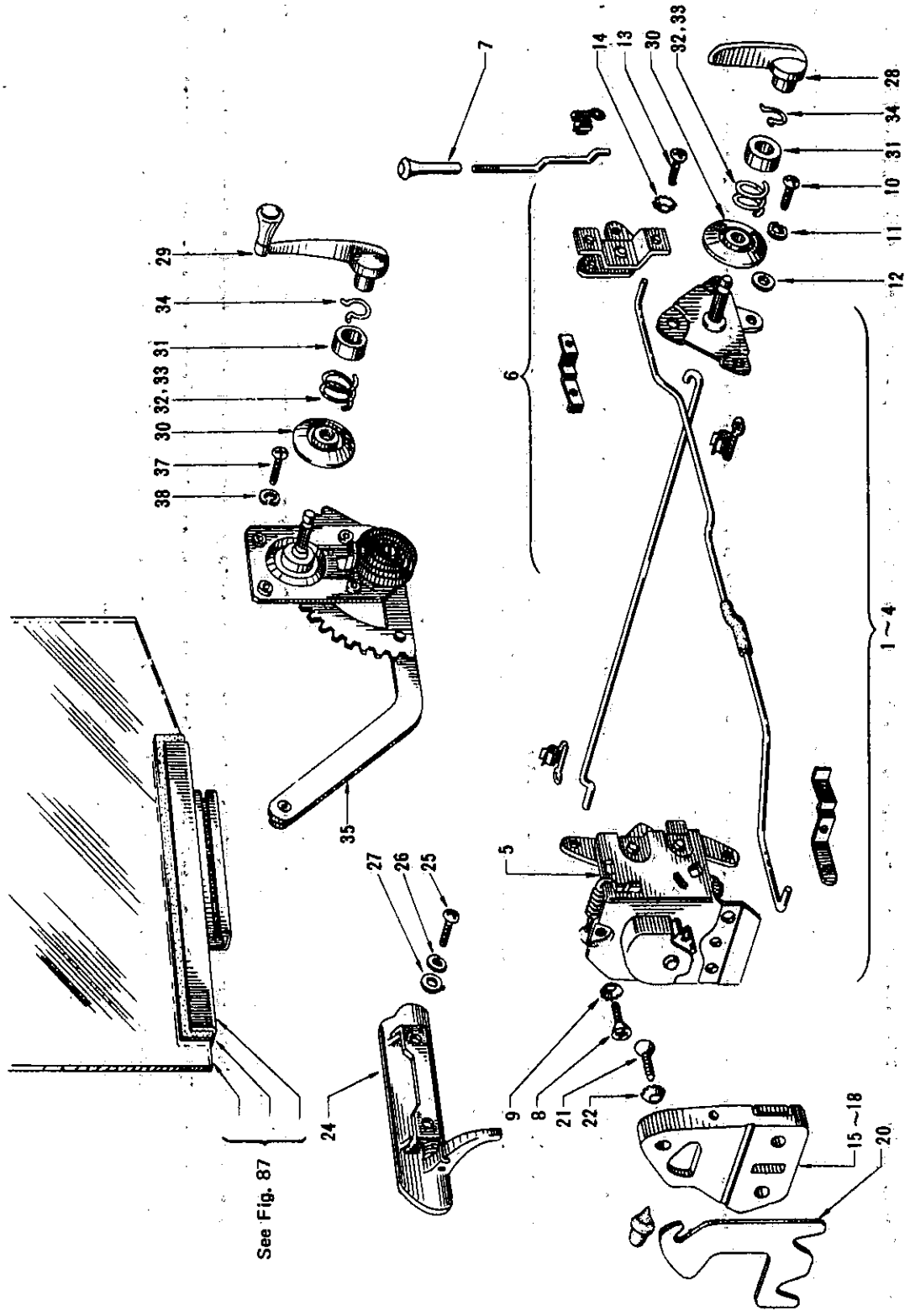

SEPTEMBER, 1968 Printed in Japan

NOTE

REAR FENDER & BUMPER

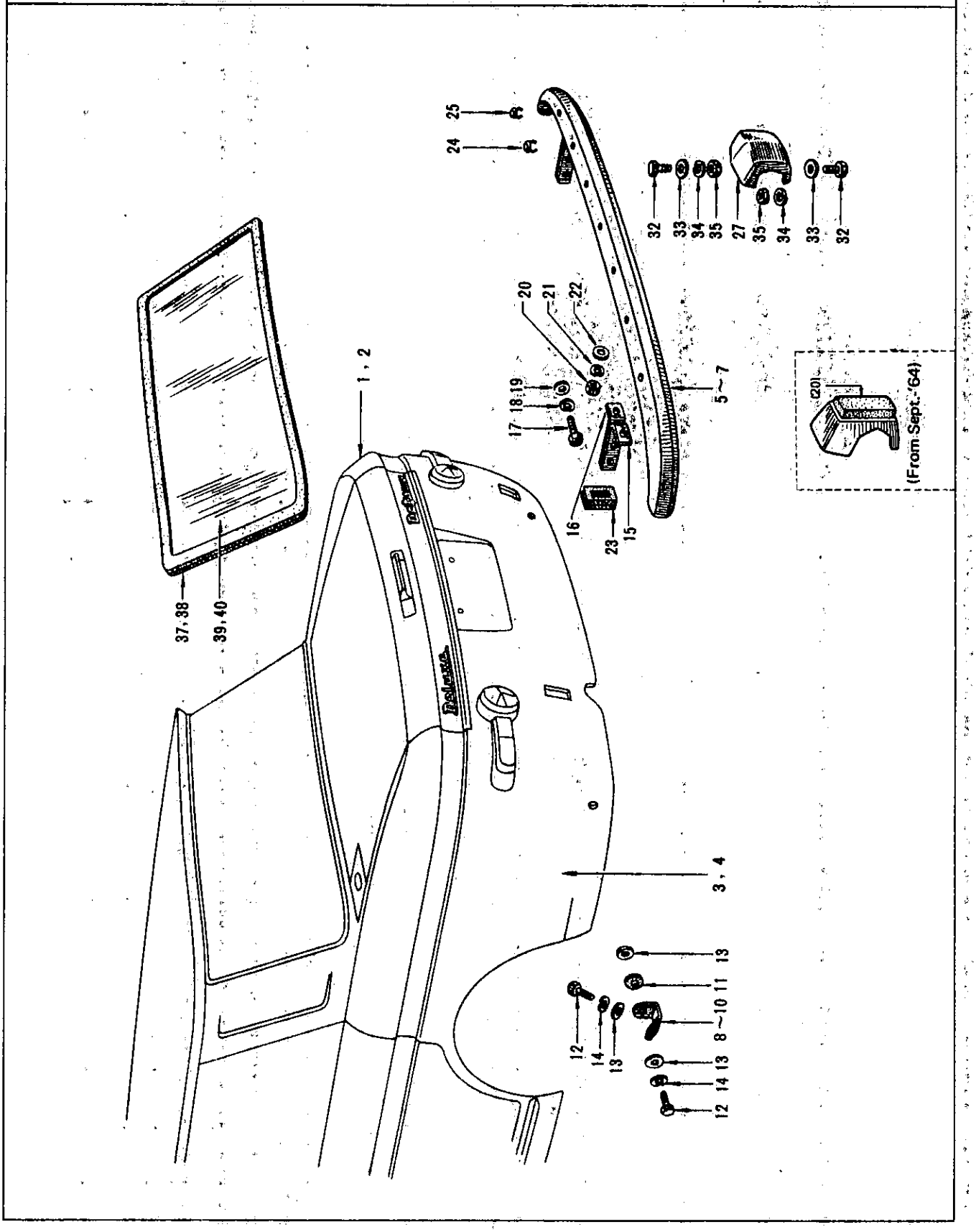

S	KEY NO.	PART NO.	PART NAME	Q'TY	SALES UNIT	MODEL	ICA
			REAR FENDER & BUMPER				
	1	78100-10630	ASSY_FENDER,REAR(R.H.)	1	1	SEDAN 410	
	2	78100-10930	ASSY_FENDER,REAR(R.H.)	1		WAGON 410	
	3	78101-10630	ASSY_FENDER,REAR(L.H.)	1	1	SEDAN 410	
	4	78101-10930	ASSY_FENDER,REAR(L.H.)	1		WAGON 410	
*	5	85000-10650	ASSY_BUMPER,REAR	1		410	
	6	85000-13200	ASSY_BUMPER,REAR(FROM SEPT. 64)	1		SEDAN 410	N
	7	85000-13400	ASSY_BUMPER,REAR(FROM SEPT. 64)	1	1	WAGON 410	
	8	85658-10600	BRACKET_REAR BUMPER,SIDE	2		SEDAN 410	
	9	85658-13200	BRACKET_REAR BUMPER,SIDE(FROMSEPT.64)	2		SEDAN 410	N
	10	85658-10900	BRACKET_REAR BUMPER,SIDE	2	10	WAGON 410	
	11	62671-36700	WASHER_RUBBER TO FIX BUMPER SIDE	AR		410	
	12	00914-52010	BOLT TO FIX BUMPER SIDE	4		410	
	13	00915-41510	WASHER_PLAIN TO FIX BUMPER SIDE	6		410	
	14	00915-11510	WASHER_LOCK TO FIX BUMPER SIDE	4		410	
*	15	85221-10600	STAY_REAR BUMPER,OUTER	2	1	410	
*	16	85223-10600	STAY_REAR BUMPER,INNER	2	1	410	
	17	00154-83510	BOLT TO FIX STAY TO MEMBER	4	100	410	
	18	00915-11810	WASHER_LOCK TO FIX STAY TO MEMBER	4	50	410	

REVISED: SEPTEMBER,1968

Printed in Japan

S	KEY NO.	PART NO.	PART NAME	Q'TY	SALES UNIT	MODEL	ICA
	19	00915-51810	WASHER_PLAIN TO FIX STAY TO MEMBER	4		410	
	20	00911-14610	NUT TO FIX BUMPER TO STAY	4		410	
	21	00915-11610	WASHER_LOCK TO FIX BUMPER TO STAY	4		410	
	22	00915-51610	WASHER_PLAIN TO FIX BUMPER TO STAY	4		410	
	23	85225-10601	RUBBER_SEALING,REAR BUMPER STAY	2	5	410	
*	24	85226-10600	PLUG_REVERSE LAMP HOLE	2	50	U.L.LU.UN.LN.LUN.WL.410	
*	25	62677-10600	PLUG_BUMPER OVERRIDER HOLE(ROUND TYPE)(UP TO C/# 4P41034525)	2	10	U.L.LU.UN.LN.LUN.WL.410	
	26	62677-10601	PLUG_BUMPER,OVERRIDER HOLE(FROM C/# 4P41034526)	2	1	U.L.LU.UN.LN.LUN.WL.410	N
	27	62663-11400	COMP_OVERRIDER	2		DL.DLN.& WAGON 410	
	28	62665-13600	ASSY-OVERRIDER LH BODY	1		DL.DLN.& WAGON 410	Y
	29	62670-13600	ASSY-OVERRIDER LH RUBBER	1		DL.DLN.& WAGON 410	Y
	30	62663-11400	COMP-OVERRIDER	2		DL.DLN.& WAGON 410	Y
	31	62666-13600	ASSY-OVERRIDER RH BODY	1		DL.DLN.& WAGON 410	Y
	32	00114-52010	BOLT TO FIX OVERRIDER	4		DL.DLN.& WAGON 410	
	33	00915-41510	WASHER_PLAIN TO FIX OVERRIDER	4		DL.DLN.& WAGON 410	
	34	00915-11510	WASHER_LOCK TO FIX OVERRIDER	4		DL.DLN.& WAGON 410	

Printed in Japan

REVISED: SEPTEMBER,1968

S	KEY NO.	PART NO.	PART NAME	Q'TY	SALES UNIT	MODEL	ICA
	35	00911-14510	NUT TO FIX OVERRIDER	4		DL.DLN.& WAGON 410	
	36	79710-10600	WEATHERSTRIP_BACK WINDOW	1	1	SEDAN 410 A TYPE	
	37	79710-11400	WEATHERSTRIP_BACK WINDOW	1		SEDAN 410(EXC.A TYPE)	
	38	79710-13600	WEATHERSTRIP_BACK WINDOW(FROM SEPT. 64)	1	1	SEDAN 410(EXC.A TYPE)	

Printed in Japan

REVISED: SEPTEMBER,1968

NOTE

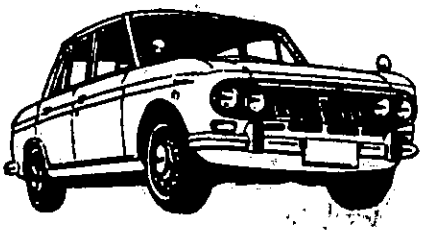

NOTE

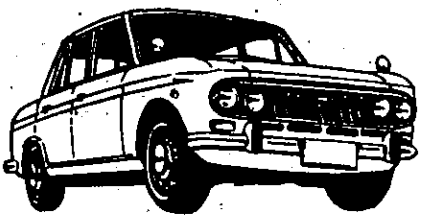

TRUNK LID & FITTING

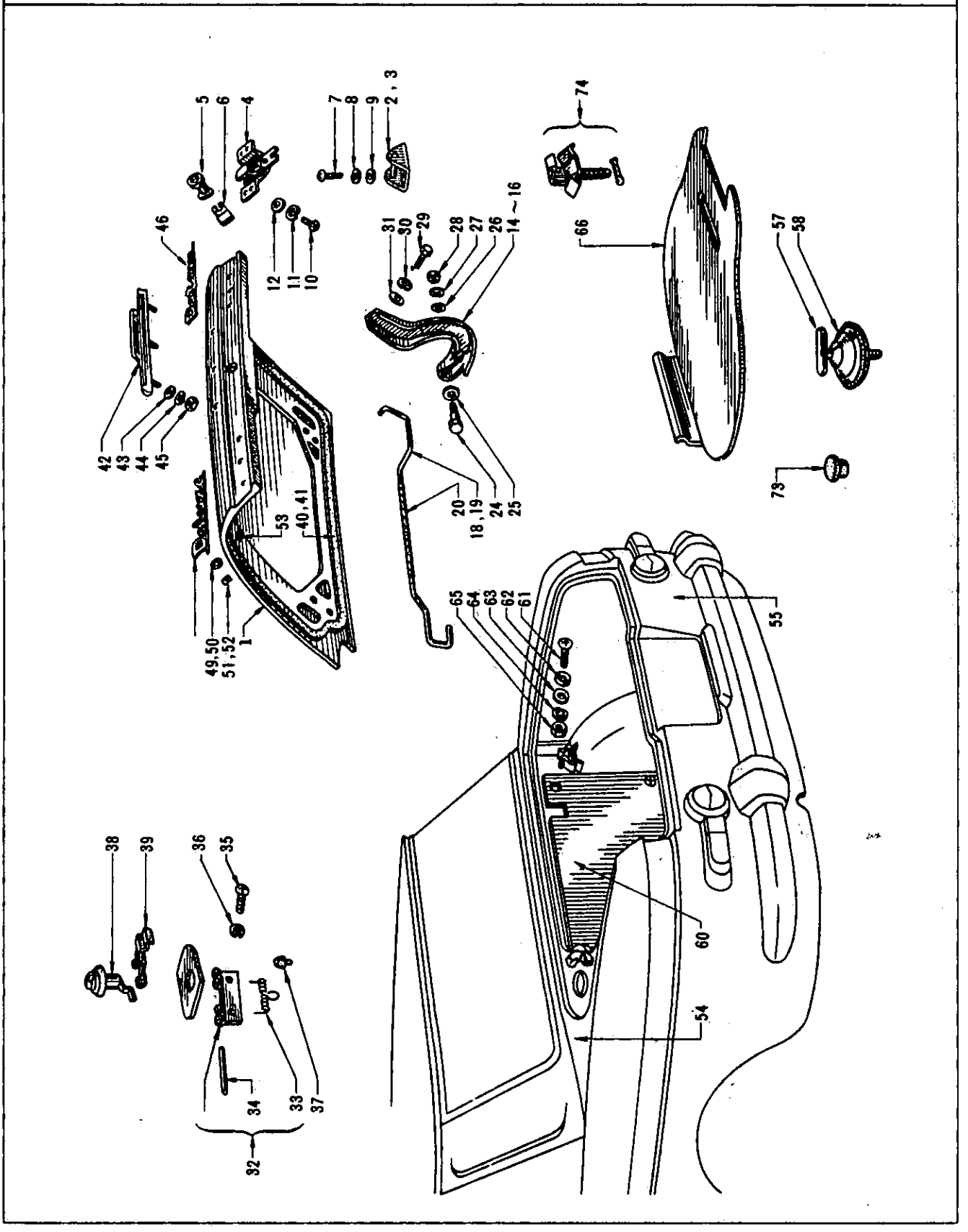

S	KEY NO.	PART NO.	PART NAME	Q'TY	SALES UNIT	MODEL	ICA
			TRUNK LID & FITTING				
	1	84300-10630	ASSY_PANEL,TRUNK LID	1		SEDAN 410	
	2	84420-10600	ASSY_STRIKER,TRUNK LID LOCK	1		SEDAN 410	
*	3	84420-10601	STRIKER_TRUNK LID LOCK	1	2	SEDAN 410	Y
*	4	84430-10600	ASSY_LOCK,TRUNK LID	1		SEDAN 410	
	5	84460-10600	ASSY_CYLINDER,TRUNK LID LOCK	1		SEDAN 410	
*	6	80590-10600	CLIP_RETAINING,CYLINDER LOCK	1	10	SEDAN 410	
	7	00314-41610	SCREW TO FIX STRIKER	2	50	SEDAN 410	
	8	00915-11410	WASHER_LOCK TO FIX STRIKER	2		SEDAN 410	
	9	00915-41410	WASHER_PLAIN TO FIX STRIKER	2		SEDAN 410	
	10	00314-01210	SCREW TO FIX LOCK	4	50	SEDAN 410	
	11	00915-11010	WASHER_LOCK TO FIX LOCK	4	100	SEDAN 410	
	12	00915-41010	WASHER_PLAIN TO FIX LOCK	4		SEDAN 410	
	13	84510-10602	ASSY_HINGE,TRUNK LID(R.H.)	1	1	SEDAN 410	
*	14	84512-10602	ASSY_HINGE,TRUNK LID(R.H.)	1	1	SEDAN 410	Y
	15	84511-10602	ASSY_HINGE,TRUNK LID(L.H.)	1	1	SEDAN 410	
*	16	84513-10602	ASSY_HINGE,TRUNK LID(L.H.)	1	1	SEDAN 410	Y
*	17	84532-10601	BAR_TORSION,TRUNK LID(R.H.)	1	10	SEDAN 410	

Printed in Japan

REVISED: SEPTEMBER,1968

S	KEY NO.	PART NO.	PART NAME	Q'TY	SALES UNIT	MODEL	ICA
	18	84532-10652	BAR_TORSION,TRUNK LID(R.H.)	1	1	SEDAN 410	Y
	19	84532-10653	BAR_TORSION,TRUNK LID(R.H.)	1	1	SEDAN 410	Y
*	20	84537-10600	RUBBER_ANTI_SQUEAK,TOR SION BAR	1	5	SEDAN 410	
*	21	84533-10601	BAR_TORSION,TRUNK LID(L.H.)	1	10	SEDAN 410	
	22	84533-10602	BAR_TORSION,TRUNK LID(L.H.)	1	1	SEDAN 410	Y
	23	84533-10603	BAR_TORSION,TRUNK LID(L.H.)	1	1	SEDAN 410	Y
	24	84535-10601	PIN_TRUNK LID HINGE	2	1	SEDAN 410	
	25	00915-41510	WASHER_PLAIN(FOR SPACE)	2		SEDAN 410	
	26	00915-11410	WASHER_LOCK TO FIX HIN GE TO BRACKET	2		SEDAN 410	
	27	00915-41410	WASHER_PLAIN TO FIX HI NGE TO BRACKET	2		SEDAN 410	
	28	00911-14410	NUT TO FIX HINGE TO BR ACKET	2		SEDAN 410	
	29	00114-52010	BOLT TO FIX HINGE TO P ANEL	4		SEDAN 410	
	30	00915-11510	WASHER_LOCK TO FIX HIN GE TO PANEL	4		SEDAN 410	
	31	00915-41510	WASHER_PLAIN TO FIX HI NGE TO PANEL	4		SEDAN 410	
	32	84350-10600	ASSY_LID,FUEL FILLER	1	1	SEDAN 410	
*	33	84356-10600	SPRING_HINGE,FUEL FILL ER LID	1	10	SEDAN 410	
	34	84357-10600	PIN_HINGE,FUEL FILLER LID	1	1	SEDAN 410	
	35	00314-01010	SCREW	2		SEDAN 410	
*	36	00915-11000	WASHER_LOCK	2	50	SEDAN 410	

Printed in Japan

REVISED: SEPTEMBER,1968

S	KEY NO.	PART NO.	PART NAME	Q'TY	SALES UNIT	MODEL	ICA
	37	68643-04100	BUMPER_COMPARTMENT LID	2	10	SEDAN 410	
	38	84360-10601	ASSY_LOCK,FUEL FILLER LID	1	1	SEDAN 410	
	39	80590-10601	CLIP_RETAINING,CYLINDER LOCK	1	10	SEDAN 410	
*	40	84806-10600	WEATHERSTRIP_TRUNK LID	1		SEDAN 410	
	41	84806-10601	WEATHERSTRIP_TRUNK LID	1	1	SEDAN 410	Y
	42	84451-10600	HANDLE_TRUNK LID	1		SEDAN 410	
	43	00915-40810	WASHER_PLAIN TO FIX HANDLE	3		SEDAN 410	
	44	00915-10810	WASHER_LOCK TO FIX HANDLE	3		SEDAN 410	
	45	00911-10810	NUT TO FIX HANDLE	3	50	SEDAN 410	
	46	84811-11401	EMBLEM_TRUNK LID"DATSUN"	1	2	SEDAN 410	
	47	84811-10800	EMBLEM_TRUNK LID(NISMO)	1		U.L.LU. 410	
	48	84813-11700	MARK_"AUTOCLUTCH"	1	2	A CLUTCH 410	
	49	97331-32200	WASHER_VINYL	3	1	SEDAN 410	
	50	97331-32200	WASHER_VINYL	2	1	A CLUTCH 410	
*	51	00918-10500	SPIRE_FIXING	3	50	SEDAN 410	
*	52	00918-10500	SPIRE_FIXING	2	50	SEDAN 410	
	53	84808-10600	PLUG_TRUNK LID HOLE REINFORCEMENT	2	5	410	
	54	79109-10630	ASSY_PANEL,REAR WAIST	1		410	
*	55	79100-10630	ASSY_PANEL,RCAR	1	1	SEDAN 410	
*	56	96205-10600	ASSY-BRACKET,LICENCE PLATE (NOT FOR SALE)	1		SEDAN 410	
*	57	57210-10600	ASSY_HANDLE,SPARE TIRE CLAMP	1	1	SEDAN 410	

Printed in Japan

REVISED: SEPTEMBER,1968

S	KEY NO.	PART NO.	PART NAME	Q'TY	SALES UNIT	MODEL	ICA
*	58	57214-10601	PLATE_SPARE TIRE CLAMP	1	1	SEDAN 410	
	59	57216-10600	ASSY_CLAMP,SPARE TIRE(FROM AUG._64)	1	10	SEDAN 410	Y
	60	84901-11400	ASSY_FINISH,TRUNK ROOM	1	1	SEDAN 410	
	61	00334-01610	SCREW_TO FIX FINISH	3		SEDAN 410	
	62	00915-81000	WASHER_FINISH,TO FIX F INISH	3		SEDAN 410	
	63	00915-41010	WASHER_PLAIN TO FIX FI NISH	3		SEDAN 410	
	64	00915-11010	WASHER_LOCK	3	100	SEDAN 410	
	65	00911-14010	NUT	3		SEDAN 410	
	66	57305-11400	COVER_SPARE TIRE	1		SEDAN 410	
	67	84920-11400	CLAMP_SPARE TIRE COVER	4	1	SEDAN 410	
	68	84921-11400	SPRING NUT_SPARE TIRE FIX	8	1	SEDAN 410	
*	69	84904-11400	MAT_TRUNK FLOOR(R.H.)	1		SEDAN 410	
	70	84904-13600	MAT_TRUNK FLOOR(FROM S EPT._64)	1	1	SEDAN 410	N
*	71	84905-11400	MAT_TRUNK FLOOR(L.H.)	1		SEDAN 410	
	72	84904-13600	MAT_TRUNK FLOOR(FROM S EPT._64)	1	1	SEDAN 410	N
	73	32021-35000	PLUG	1	5	SEDAN 410	
	74	99610-10600	ASSY_CLAMP,TIRE STOPPE R	1	10	SEDAN 410	N
*	75	99607-10600	GROMMET_BODY JACK SEAT	1	2	SEDAN 410	
	76	24256-10600	GROMMET_RUBBER(FIXED T O REAR APRON)	1	10	SEDAN 410	
	77	79930-10600	BOARD_SEALING,SEAT BAC K SUPPORT	1	1	SEDAN 410	

Printed in Japan

REVISED: SEPTEMBER,1968

NOTE

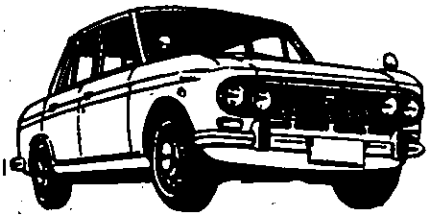

TAIL GATE (WAGON)

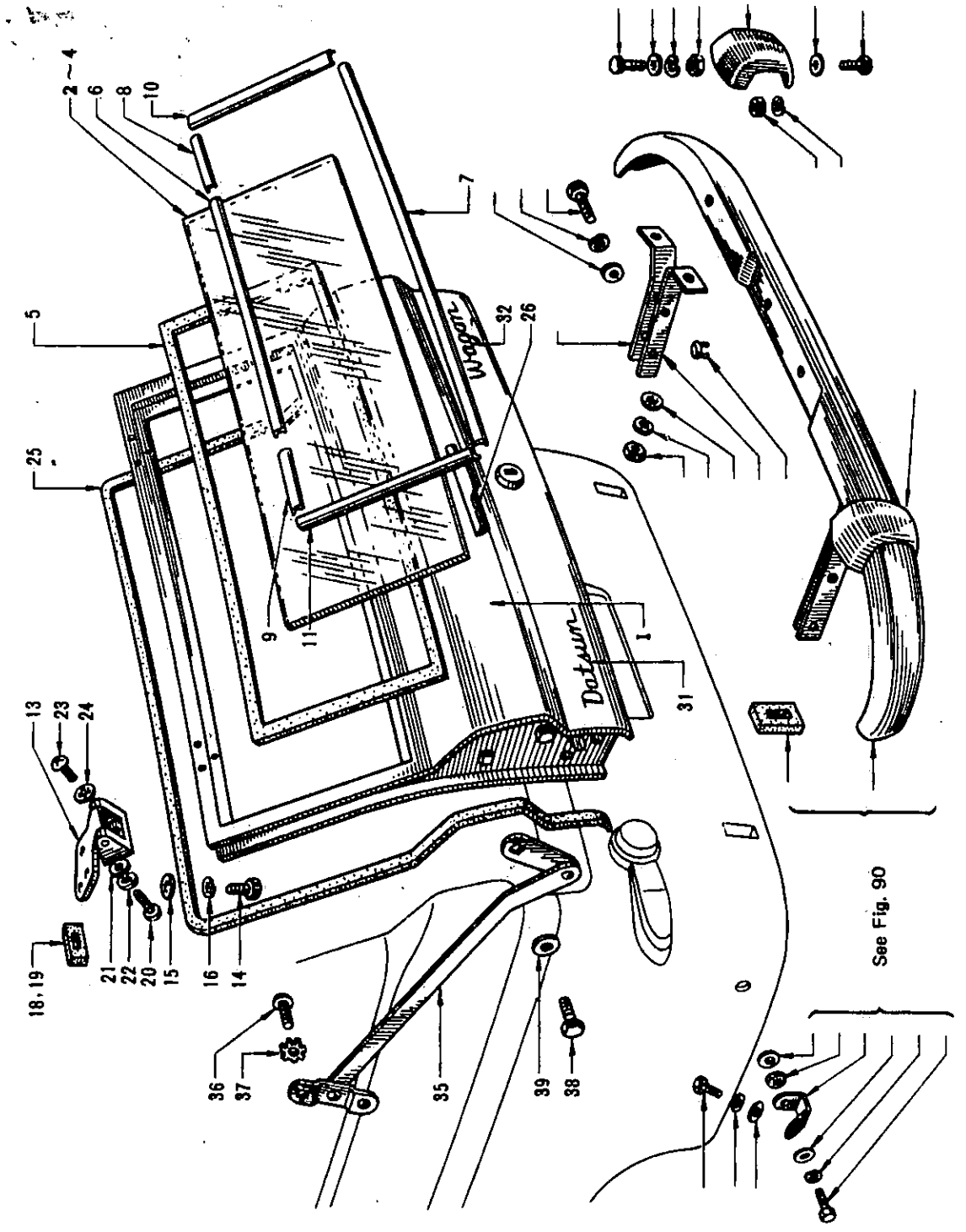

S	KEY NO.	PART NO.	PART NAME	Q'TY	SALES UNIT	MODEL	ICA
			TAIL GATE (WAGON)				
*	1	90101-10930	ASSY_PANEL,TAIL GATE	1		WAGON 410	
	2	90304-10900	GLASS_TAIL GATE WINDOW (TOUGHENED,ANTI_SUN)	1		R DRIVE WAGON 410	
	3	90304-11000	GLASS_TAIL GATE WINDOW (SPECIALLY TOUGHENED)	1		L DRIVE WAGON 410	
	4	90304-11001	GLASS_TAIL GATE WINDOW (SPECIALLY TOUGHENED,ANTI_SUN)	1		L DRIVE WAGON 410	
*	5	90307-10900	WEATHERSTRIP_TAIL GATE WINDOW	1	1	WAGON 410	
	6	90903-10900	MOULDING_TAIL GATE,UPPER	1		WAGON 410	
	7	90904-10900	MOULDING_TAIL GATE,LOWER	1	1	WAGON 410	
	8	90905-10900	MOULDING_TAIL GATE,UPPER SIDE(R.H.)	1		WAGON 410	
	9	90906-10900	MOULDING_TAIL GATE,UPPER SIDE(L.H.)	1	1	WAGON 410	
	10	90907-10900	MOULDING_TAIL GATE,SIDE(R.H.)	1	1	WAGON 410	
	11	90908-10900	MOULDING_TAIL GATE,SIDE(L.H.)	1	1	WAGON 410	
	12	90401-10900	ASSY_HINGE,TAIL GATE(R.H.)	1		WAGON 410	
	13	90402-10900	ASSY_HINGE,TAIL GATE(L.H.)	1	1	WAGON 410	
	14	00114-52010	BOLT TO FIX HINGE TO BODY	6		WAGON 410	
	15	00915-41510	WASHER_PLAIN TO FIX HINGE TO BODY	6		WAGON 410	

Printed in Japan
REVISED: SEPTEMBER,1968

S	KEY NO.	PART NO.	PART NAME	Q'TY	SALES UNIT	MODEL	ICA
	16	00915-11510	WASHER_LOCK TO FIX HINGE TO BODY	6		WAGON 410	
	17	90418-10900	SHIM_TAIL GATE HINGE	4	20	WAGON 410	
	18	90408-10900	SEAL_DUST,TAIL GATE	4	1	WAGON 410	
	19	90408-10902	SEAL_DUST,TAIL GATE	4		WAGON 410	Y
	20	00314-41610	SCREW FIX TO HINGE TO GATE	4	50	WAGON 410	
	21	00915-41410	WASHER_PLAIN FIX TO HINGE TO GATE	4		WAGON 410	
	22	00915-11410	WASHER_LOCK FIX TO HINGE TO GATE	4		WAGON 410	
	23	00334-41610	SCREW FIX TO HINGE TO GATE	2		WAGON 410	
	24	00916-41510	WASHER_TOOTH LOCK FIX TO HINGE TO GATE	2	50	WAGON 410	
	25	90902-10900	WEATHERSTRIP_TAIL GATE,OUTER	1	1	WAGON 410	
	26	84451-10600	HANDLE_TRUNK LID	1		WAGON 410	
	27	00915-40810	WASHER_PLAIN	3		WAGON 410	
	28	00915-10810	WASHER_LOCK	3		WAGON 410	
	29	00911-10810	NUT	3	50	WAGON 410	
	30	90909-10900	PAD_WEATHERSTRIP	2		WAGON 410	
	31	84811-11401	EMBLEM_TRUNK LID	1	2	WAGON 410	
	32	84812-10900	MARK_"WAGON"	1	2	WAGON 410	
	33	00918-11000	SPIRE_FIXING	6		WAGON 410	
	34	90420-10900	ASSY_STAY,TAIL GATE(R.H.)	1	1	WAGON 410	
	35	90421-10900	ASSY_STAY,TAIL GATE(L.H.)	1	1	WAGON 410	
	36	00324-52010	SCREW TO FIX STAY TO BODY	4	50	WAGON 410	

Printed in Japan

REVISED: SEPTEMBER,1968

S	KEY NO.	PART NO.	PART NAME	Q'TY	SALES UNIT	MODEL	ICA
	37	00916-41510	WASHER_TOOTH LOCK TO F IX STAYTO BODY	4	50	WAGON 410	
	38	00114-41210	BOLT TO FIX STAY TO PA NEL	2		WAGON 410	
	39	00915-11510	WASHER_LOCK TO FIX STA Y TO PANEL	2		WAGON 410	

Printed in Japan

REVISED: SEPTEMBER,1968

NOTE

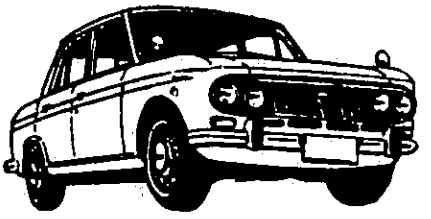

NOTE

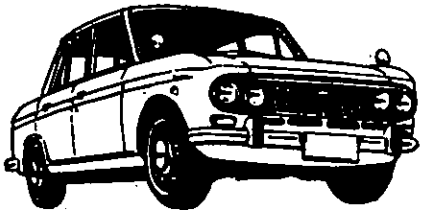

SIDE WINDOW & TAIL GATE TRIMMING (WAGON)

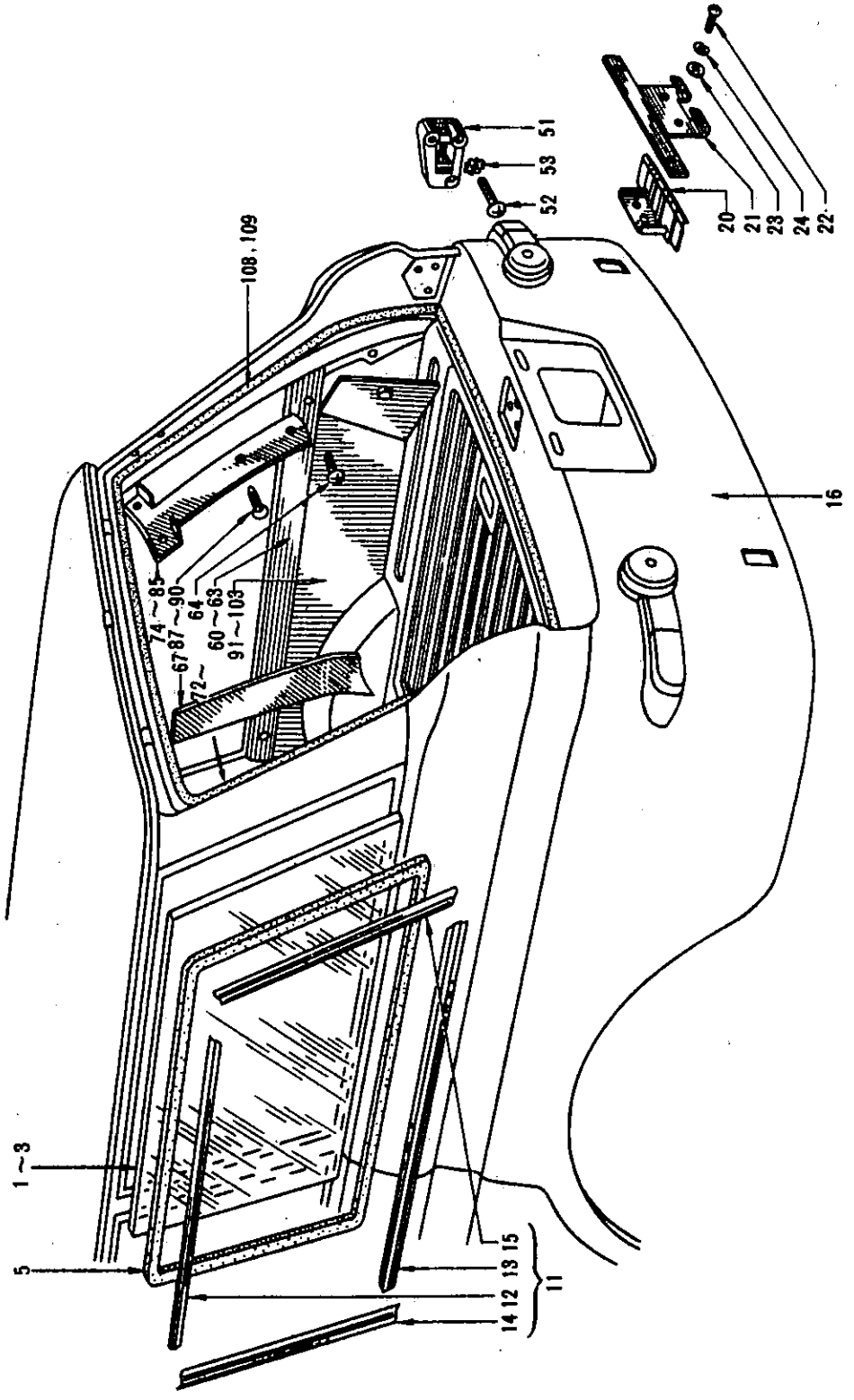

SIDE WINDOW & TAIL GATE TRIMMING (WAGON)

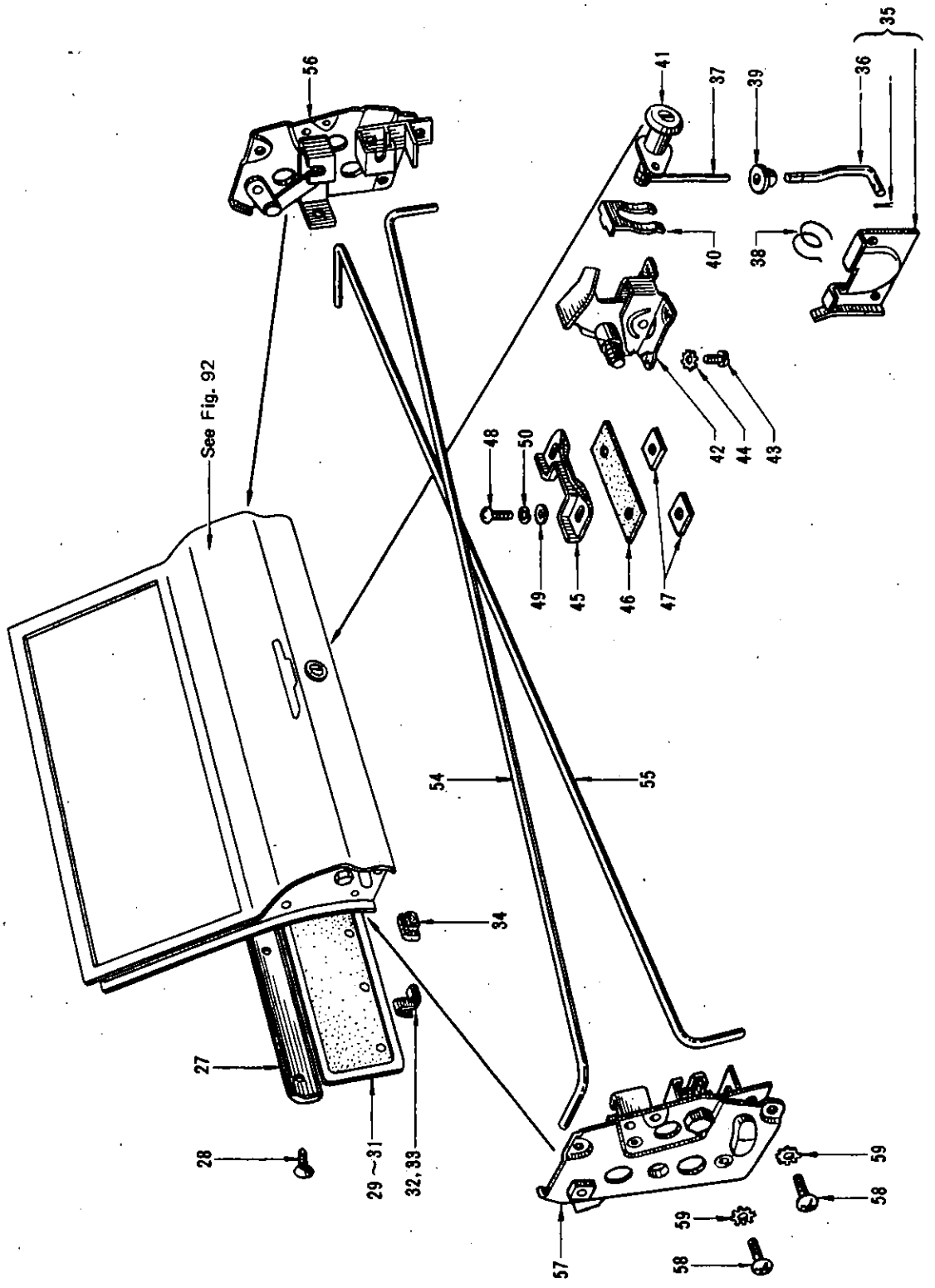

S	KEY NO.	PART NO.	PART NAME	Q'TY	SALES UNIT	MODEL	ICA
			SIDE WINDOW & TAIL GATE TRIMMING (WAGON)				
	1	76806-10900	GLASS_SIDE WINDOW(TOUGHEN)	2		R DRIVE WAGON 410	
*	2	76806-11000	GLASS_SIDE WINDOW(SPECIALLY TOUGHEN)	2		L DRIVE WAGON 410	
*	3	76806-11001	GLASS_SIDE WINDOW(SPECIALLY TOUGHEN ANTI_SUN)	2		L DRIVE WAGON 410	
*	4	76807-10900	WEATHERSTRIP_SIDE WINDOW(R.H.)	1	1	WAGON 410	
	5	76808-10900	WEATHERSTRIP_SIDE WINDOW(L.H.)	1	1	WAGON 410	
	6	76809-10900	SET_MOULDING,SIDE WINDOW(R.H.)	1		WAGON(EXC. A TYPE)410	
	7	76811-10900	MOULDING_SIDE WINDOW,UPPER(R.H.)	1		WAGON(EXC. A TYPE)410	
	8	76813-10900	MOULDING_SIDE WINDOW,LOWER(R.H.)	1	1	WAGON(EXC. A TYPE)410	
	9	76815-10900	MOULDING_SIDE WINDOW,FRONT(R.H.)	1	1	WAGON(EXC. A TYPE)410	
	10	76817-10900	MOULDING_SIDE WINDOW,REAR(R.H.)	1	10	WAGON(EXC. A TYPE)410	
	11	76810-10900	SET_MOULDING,SIDE WINDOW(L.H.)	1		WAGON(EXC. A TYPE)410	
	12	76812-10900	MOULDING_SIDE WINDOW,UPPER(L.H.)	1		WAGON(EXC. A TYPE)410	
	13	76814-10900	MOULDING_SIDE WINDOW,LOWER(L.H.)	1	1	WAGON(EXC. A TYPE)410	
	14	76816-10900	MOULDING_SIDE WINDOW,FRONT(L.H.)	1		WAGON(EXC. A TYPE)410	
	15	76818-10900	MOULDING_SIDE WINDOW,REAR(L.H.)	1	1	WAGON(EXC. A TYPE)410	

Printed in Japan

REVISED: SEPTEMBER,1968

S	KEY NO.	PART NO.	PART NAME	Q'TY	SALES UNIT	MODEL	ICA
	16	79100-10930	ASSY_PANEL,REAR	1		WAGON 410	
	17	66524-58000	CLIP_B	4	5	WAGON 410	
	18	24197-01700	CLIP_WIRE HARNESS	2	1	WAGON 410	
	19	96234-10900	ASSY_BRACKET,LICENCE PLATE LOCK	1		WAGON 410	
	20	96220-10900	ASSY_HINGE,LICENCE PLATE BRACKET	1	1	WAGON 410	
	21	96205-10900	ASSY_BRACKET,LICENCE PLATE	1	1	WAGON 410	
	22	00314-41610	SCREW	2	50	WAGON 410	
	23	00915-41410	WASHER_PLAIN	2		WAGON 410	
	24	00915-11410	WASHER_LOCK	2		WAGON 410	
	25	66174-01500	RUBBER_PLUG HOLE	2		WAGON 410	
	26	24256-10600	GROMMET_RUBBER(FIXED TO REAR APRON)	1	10	WAGON 410	
*	27	90913-10900	GARNISH_TAIL GATE	1	1	WAGON 410	
	28	00530-40710	SCREW	3		WAGON 410	
*	29	90901-10900	ASSY_TRIMMING,TAIL GATE(RED)	1	1	WAGON 410	
*	30	90901-10901	ASSY_TRIMMING,TAIL GATE(BLUE)	1	1	WAGON 410	
	31	90901-10903	ASSY_TRIMMING,TAIL GATE(BROWN)	1	1	WAGON 410	
	32	76915-30000	CLIP_TRIM PAD	7		WAGON 410	
	33	80919-32200	CLIP_TRIM PAD	12	10	WAGON 410	Y
	34	76916-00100	PLUG	2	1	WAGON 410	
	35	79105-10900	ASSY_STRIKER,REINFORCEMENT	2		WAGON 410	
	36	96239-10900	ELBOW	1	5	WAGON 410	
	37	96236-10900	ROD	1		WAGON 410	

Printed in Japan

REVISED: SEPTEMBER,1968

S	KEY NO.	PART NO.	PART NAME	Q'TY	SALES UNIT	MODEL	ICA
*	38	96238-10900	SPRING	1	1	WAGON 410	
	39	96240-10900	NUT	1		WAGON 410	
	40	80590-10601	CLIP_RETAINING,CYLINDE R LOCK	1	10	WAGON 410	
	41	96807-10900	ASSY_CYLINDER,TAIL GAT E LOCK	1	1	WAGON 410	
	42	90502-10900	ASSY_LOCK,TAIL GATE	1	1	WAGON 410	
	43	00324-01210	SCREW	4	50	WAGON 410	
	44	00916-41010	WASHER_TOOTH	4		WAGON 410	
	45	90805-10900	STRIKER_TAIL GATE LOCK	1	1	WAGON 410	
	46	90803-10900	PLATE_FRICTION,TAIL GA TE STRIKER	1	10	WAGON 410	
	47	90804-10900	SHIM_ADJUSTING,TAIL GA TE STRIKER	2		WAGON 410	
	48	00314-41610	SCREW	2	50	WAGON 410	
	49	00915-41410	WASHER_PLAIN	2		WAGON 410	
	50	00915-11410	WASHER_LOCK	2		WAGON 410	
	51	90623-10900	ASSY_STRIKER(L.H.)	1	5	WAGON 410	
	52	00324-42000	SCREW	6		WAGON 410	
	53	00916-11410	WASHER_LOCK	6	50	WAGON 410	
	54	90411-10900	BAR_TORSION,TAIL GATE(R.H.)	1	1	WAGON 410	
	55	90412-10900	BAR_TORSION,TAIL GATE(L.H.)	1	1	WAGON 410	
*	56	90430-10900	ASSY_BASE,TAIL GATE ST AY(R.H.)	1		WAGON 410	
*	57	90431-10900	ASSY_BASE,TAIL GATE ST AY(L.H.)	1		WAGON 410	
	58	00324-41210	SCREW	6	100	WAGON 410	
	59	00916-41410	WASHER_TOOTH LOCK	6		WAGON 410	

Printed in Japan

REVISED: SEPTEMBER,1968

S	KEY NO.	PART NO.	PART NAME	Q'TY	SALES UNIT	MODEL	ICA
	60	76820-10900	GARNISH_REAR WINDW(R.H.)	1	1	WAGON 410	
	61	76820-10901	GARNISH_REAR WINDOW(R.H.)	1		WAGON 410	Y
*	62	76821-10900	GARNISH_REAR WINDOW(L.H.)	1	1	WAGON 410	
	63	76821-10901	GARNISH_REAR WINDOW(L.H.)	1		WAGON 410	Y
	64	00530-61020	SCREW	4	50	WAGON 410	
	65	76813-11000	MOULDING_SIDE WINDOW LOWER(R.H.)	1	1	WAGON(A TYPE)410	
	66	76814-11000	MOULDING_SIDE WINDOW LOWER(L.H.)	1		WAGON(A TYPE)410	
	67	76690-10900	MOULDING_GARNISH,REAR PILLAR(RED)(RH)	1	1	WAGON 410	
	68	76690-10901	MOULDING_GARNISH,REAR PILLAR(BLUE)(RH)	1	1	WAGON 410	
	69	76690-10902	MOULDING_GARNISH,REAR PILLAR(GREEN)(RH)	1		WAGON 410	
	70	76691-10900	MOULDING_GARNISH,REAR PILLAR(RED)(LH)	1	1	WAGON 410	
	71	76691-10901	MOULDING_GARNISH,REAR PILLAR(BLUE)(LH)	1	1	WAGON 410	
	72	76691-10902	MOULDING_GARNISH,REAR PILLAR(GREEN)(LH)	1		WAGON 410	
	73	73918-10601	FASTENER_GARNISH MOULDING	32	1	WAGON 410	
	74	76290-10900	MOULDING_GARNISH,TAIL PILLAR(RED)(RH)	1		WAGON 410	
	75	76290-10903	MOULDING_GARNISH TAIL PILLAR(GREEN)(FROM SEPT_64)	1	1	WAGON 410	N
	76	76290-10901	MOULDING_GARNISH,TAIL PILLAR(BLUE)(RH)	1		WAGON 410	

Printed in Japan

REVISED: SEPTEMBER,1968

S	KEY NO.	PART NO.	PART NAME	Q'TY	SALES UNIT	MODEL	ICA
	77	76290-10903	MOULDING_GARNISH,TAIL PILLAR(GREEN)(FROM SEPT_64)	1	1	WAGON 410	N
	78	76290-10902	MOULDING_GARNISH,TAIL PILLAR(GREEN)(RH)	1		WAGON 410	
	79	76290-10903	MOULDING_GARNISH,TAIL PILLAR(GREEN)(FROM SEPT._64)	1	1	WAGON 410	N
	80	76291-10900	MOULDING_GARNISH,TAIL PILLAR(RED)(LH)	1		WAGON 410	
	81	76291-10903	MOULDING_GARNISH,TAIL PILLAR(GREEN)(FROM SEPT_64)	1	1	WAGON 410	N
	82	76291-10901	MOULDING_GARNISH,TAIL PILLAR(BLUE)(LH)	1		WAGON 410	
	83	76291-10903	MOULDING_GARNISH,TAIL PILLAR(GREEN)(FROM SEPT_64)	1	1	WAGON 410	N
	84	76291-10902	MOULDING_GARNISH,TAIL PILLAR(GREEN)(LH)	1		WAGON 410	
	85	76291-10903	MOULDING_GARNISH,TAIL PILLAR(GREEN)(FROM SEPT._64)	1	1	WAGON 410	N
	86	00530-61320	SCREW	7	50	WAGON 410	
	87	00530-61010	SCREW	9	50	WAGON 410	
	88	00520-61010	SCREW	2		WAGON 410	
	89	00530-61320	SCREW	7	50	SEDAN 410	
	90	00530-61020	SCREW	4	50	SEDAN 410	
	91	80999-11100	WASHER_TRIM	5	50	WAGON 410	
	92	76901-10900	ASSY_TRIM,BODY SIDE(RED)(RH)	1	1	WAGON 410	
	93	76901-10903	ASSY_TRIM,BODY SIDE(RED)(RH)	1	1	WAGON 410	N
	94	76901-10901	ASSY_TRIM,BODY SIDE(BLUE)(RH)	1	1	WAGON 410	

Printed in Japan

REVISED: SEPTEMBER,1968

S	KEY NO.	PART NO.	PART NAME	Q'TY	SALES UNIT	MODEL	ICA
	95	76901-10904	ASSY_TRIM,BODY SIDE(BLUE)(RH)	1	1	WAGON 410	N
	96	76901-10902	ASSY_TRIM,BODY SIDE(GREEN)(RH)H)	1		WAGON 410	
	97	76901-11000	ASSY_TRIM,BODY SIDE(GREEN)(RH)	1	1	WAGON 410	N
	98	76902-10900	ASSY_TRIM,BODY SIDE(RED)(LH)	1	1	WAGON 410	
	99	76902-10903	ASSY_TRIM,BODY SIDE(RED)(LH)	1		WAGON 410	N
	100	76902-10901	ASSY_TRIM,BODY SIDE(BLUE)(LH)	1	1	WAGON 410	
	101	76902-10904	ASSY_TRIM,BODY SIDE(BLUE)(LH)	1	1	WAGON 410	N
	102	76902-10902	ASSY_TRIM,BODY SIDE(GREEN)(LH)	1		WAGON 410	
	103	76902-11000	ASSY_TRIM,BODY SIDE(GREEN)(LH)	1	1	WAGON 410	N
	104	76911-10900	BOLT	2	1	WAGON 410	
	105	00915-51520	WASHER_PLAIN	2		WAGON 410	
	106	76912-10900	SPRING_FINISH,REAR INSIDE	2		WAGON 410	
	107	80919-32200	CLIP_DOOR FINISH	4	10	WAGON 410	
	108	76805-10902	WEATHERSTRIP_TAIL GATE	1	1	WAGON 410	Y
	109	76805-10903	WEATHERSTRIP_TAIL GATE	1		WAGON 410	Y

Printed in Japan

REVISED: SEPTEMBER,1968

NOTE

NOTE

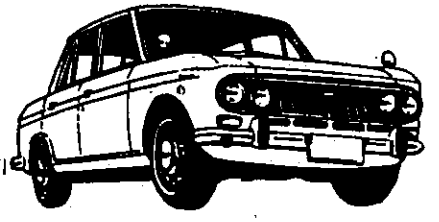

AUXILIARY FLOOR (WAGON)

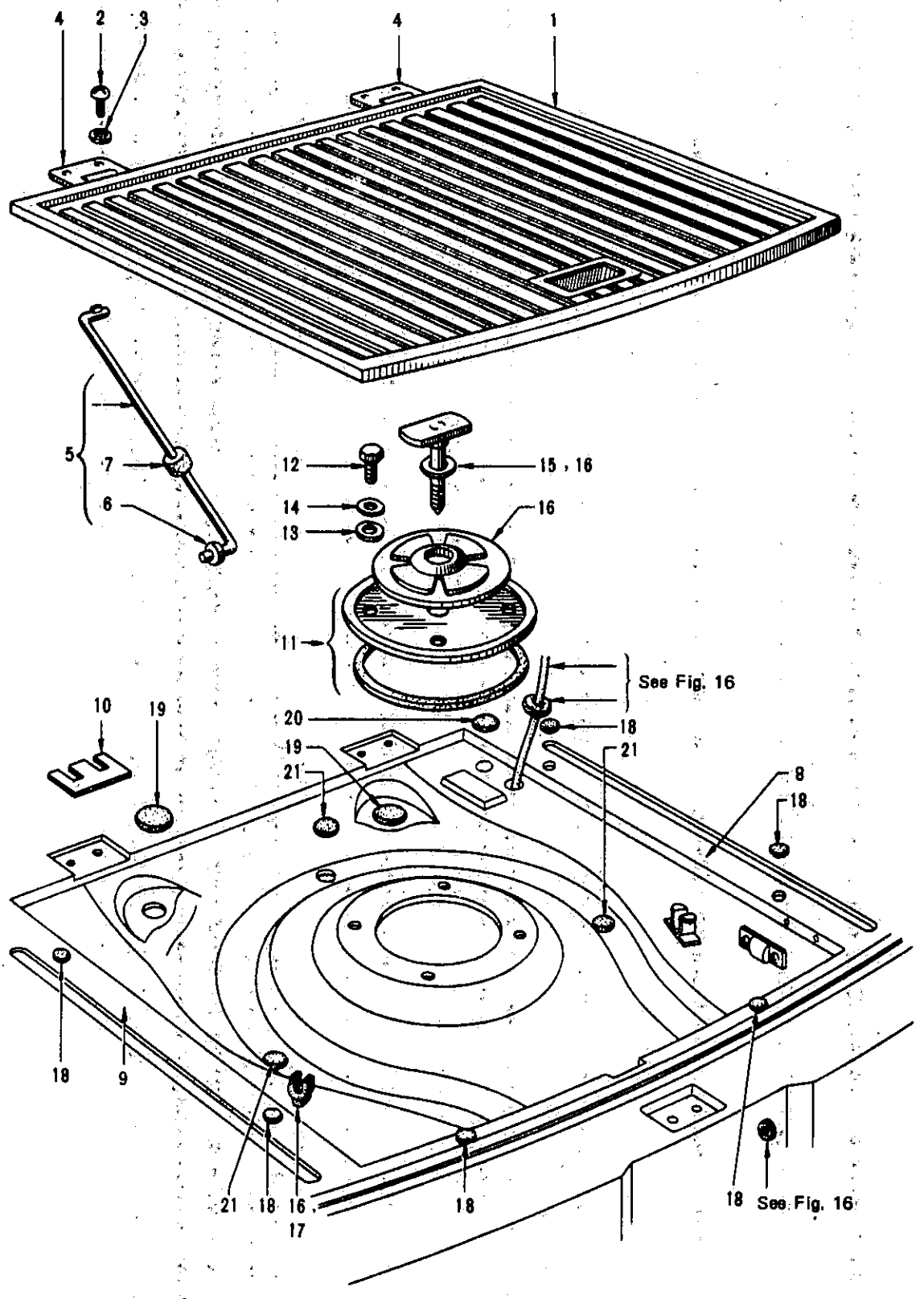

S	KEY NO.	PART NO.	PART NAME	Q'TY	SALES UNIT	MODEL	ICA
			AUXILIARY FLOOR (WAGON)				
	1	74950-10901	ASSY_PANEL,AUXILIARY FLOOR	1		WAGON 410	
	2	00324-41610	SCREW	4	50	WAGON 410	
	3	00916-41410	WASHER	4		WAGON 410	
	4	74986-10900	ASSY_HINGE,AUXILIARY FLOOR	2		WAGON 410	
	5	74990-10900	ASSY_STAY,AUXILIARY FLOOR	1	1	WAGON 410	
	6	74992-10900	WASHER_SPECIAL	1	1	WAGON 410	
	7	74993-10900	BUMPER_RUBBER	1	10	WAGON 410	
	8	74970-10900	ASSY_FLOOR,AUXILIARY(R.H.)	1		WAGON 410	
	9	74971-10900	ASSY_FLOOR,AUXILIARY(L.H.)	1		WAGON 410	
	10	74968-10900	SHIM_ADJUSTING,AUXILIARY FLOOR	2		WAGON 410	
	11	74927-10900	ASSY_COVER,INSPECTION HOLE	1		WAGON 410	
	12	00114-52010	BOLT TO FIX INSPECTION HOLE COVER	4		WAGON 410	
	13	00915-11510	WASHER_LOCK TO FIX INSPECTION HOLE COVER	4		WAGON 410	
	14	00915-41510	WASHER_PLAIN TO FIX INSPECTION HOLE COVER	4		WAGON 410	
	15	57210-10901	ASSY_CLAMP	1		WAGON 410	
*	16	57214-10601	PLATE_SPARE TIRE CLAMP	1	1	WAGON 410	
	17	57216-10600	ASSY_CLAMP,SPARE TIRE	1	10	WAGON 410	Y
	18	99611-08400	HOLDER_JACK HANDLE	1	5	WAGON 410	

REVISED: SEPTEMBER,1968

Printed in Japan

S	KEY NO.	PART NO.	PART NAME	Q'TY	SALES UNIT	MODEL	ICA
	19	93438-26260	GROMMET_BUMPER	6	5	WAGON 410	
	20	74720-03200	GROMMET_BUMPER	2	5	WAGON 410	
	21	74942-10900	PLUG	1		WAGON 410	
	22	86350-00100	GROMMET_RUBBER	3	5	WAGON 410	

Printed in Japan

REVISED: SEPTEMBER, 1968

NOTE

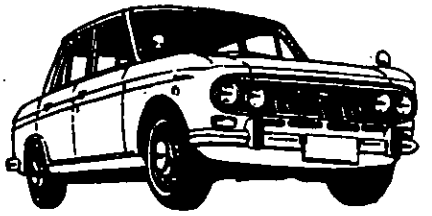

BODY PANELS

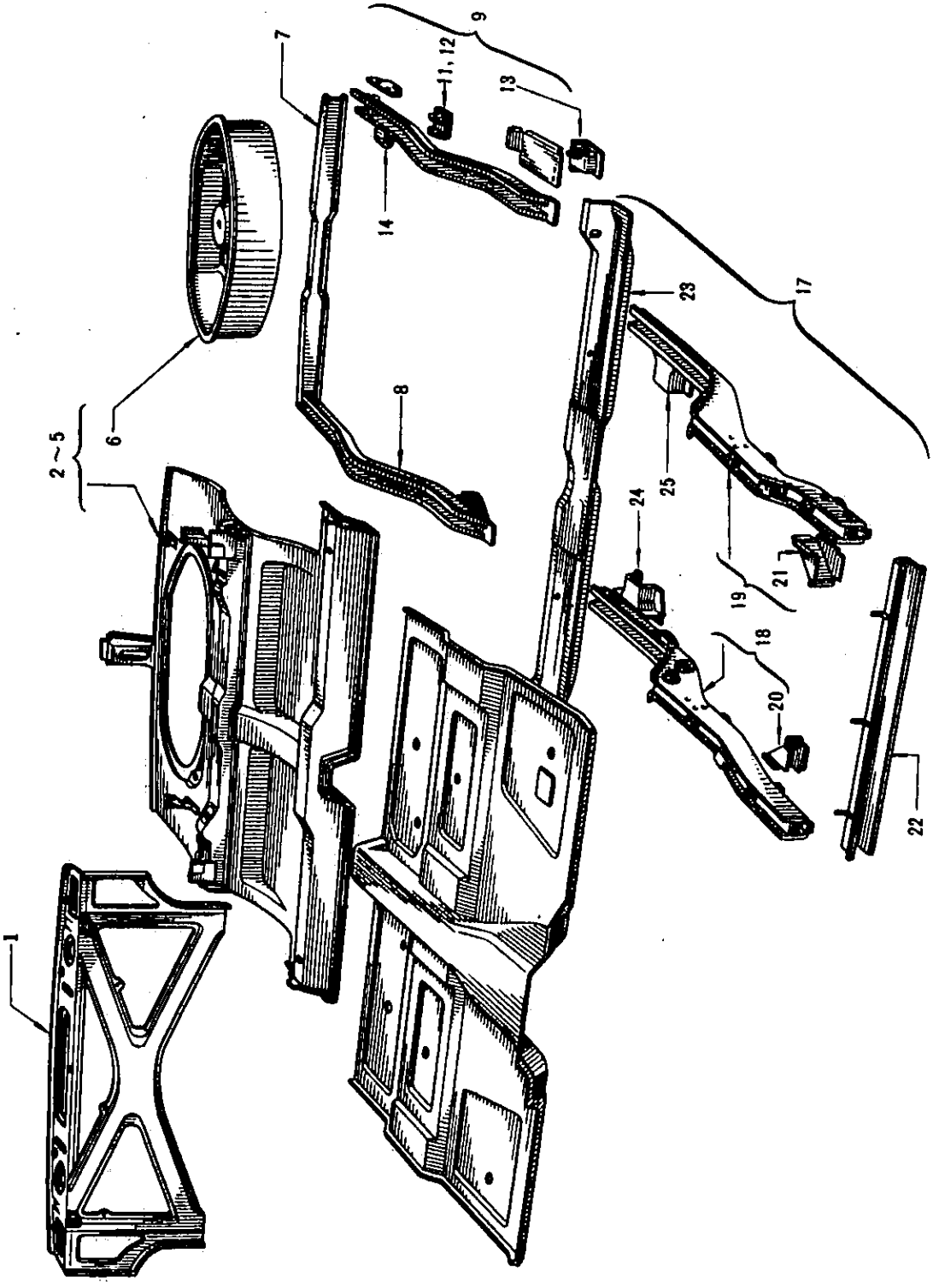

S	KEY NO.	PART NO.	PART NAME	Q'TY	SALES UNIT	MODEL	ICA
			BODY PANELS				
	1	79402-10600	ASSY_PANEL,REAR SEAT BACK	1	1	SEDAN 410	
	2	74500-10600	ASSY_PANEL,REAR FLOOR	1		SEDAN,R DRIVE 410	
*	3	74500-13201	ASSY_PANEL,REAR FLOOR(FROM SEPT._64)	1		SEDAN,R DRIVE 410	N
	4	74500-10800	ASSY_PANEL,REAR FLOOR	1		SEDAN,L DRIVE 410	
*	5	74500-13901	ASSY_PANEL,REAR FLOOR(FROM SEPT._64)	1		SEDAN,L DRIVE 410	N
*	6	74507-10600	ASSY_PANEL,SPAIR WHEEL HOUSE	1	1	SEDAN 410	
	7	74856-10600	MEMBER_CROSS,REAR	1		410	
*	8	74804-10600	ASSY_MEMBER,SIDE,REAR(R.H.)	1		410	
*	9	74805-10600	ASSY_MEMBER,SIDE,REAR(L.H.)	1		410	
*	10	74870-10600	ASSY_BRACKET,REAR SPRING BUMPER(R.H.)	1	1	410	
	11	74873-10600	ASSY_BRACKET,REAR SPRING BUMPER(L.H.)	1	1	410	
	12	74853-10650	ASSY_BRACKET,REAR SPRING,FRONT(R.H.)	1		410	
	13	74854-10650	ASSY_BRACKET,REAR SPRING,FRONT(L.H.)	1		410	
*	14	20641-10600	ASSY_SUPPORT,EXHAUST TUBE	1	100	410	
	15	74800-10650	ASSY_DASH & FRONT MEMBER	1		R DRIVE 410	
	16	74800-10850	ASSY_DASH & FRONT MEMBER	1	1	L DRIVE 410	

REVISED: SEPTEMBER,1968

Printed in Japan

S	KEY NO.	PART NO.	PART NAME	Q'TY	SALES UNIT	MODEL	ICA
*	17	74800-10630	ASSY_MEMBER,FRONT	1		410	
	18	74801-10630	ASSY_MEMBER,SIDE,FRONT (R.H.)	1		410	
	19	74802-10630	ASSY_MEMBER,SIDE,FRONT (L.H.)	1	1	410	
	20	74835-10600	BRACE(R.H.)	1	1	410	
	21	74836-10600	BRACE(L.H.)	1	1	410	
	22	74860-10600	ASSY_MEMBER,CROSS,1ST	1	1	410	
	23	74320-10600	ASSY_MEMBER,CROSS,2ND	1	1	410	
	24	74890-10600	ASSY_BRACKET,ENGINE SUPPORT(R.H.)	1	1	410	
	25	74891-10600	ASSY_BRACKET,ENGINE SUPPORT(L.H.)	1	1	410	
*	26	62500-10630	ASSY_PANEL,FRONT	1		410	
*	27	62811-10600	RUBBER_SEALING	1	2	410	
*	28	64100-10630	ASSY_PANEL,HOOD LEDGE(R.H.)	1		410	
	29	64100-13230	ASSY_PANEL,HOOD LEDGE(R.H.)	1		410	Y
	30	64100-13830	ASSY_PANEL,HOOD LEDGE(R.H.)	1		R DRIVE 410	
	31	64100-13930	ASSY_PANEL,HOOD LEDGE(R.H.)	1	1	L DRIVE 410	
	32	64101-10630	ASSY_PANEL,HOOD LEDGE(L.H.)	1		410	
	33	67300-10630	ASSY_PANEL,DASH,LOWER	1		R DRIVE 410	
*	34	67300-13230	ASSY_PANEL,DASH,LOWER(FROM SEPT._64)	1	1	3 SPEED R DRIVE 410	N
	35	67300-14330	ASSY_PANEL,DASH,LOWER(FROM SEPT._64)	1	1	4 SPEED R DRIVE 410	
	36	67300-10830	ASSY_PANEL,DASH,LOWER	1		L DRIVE 410	

Printed in Japan

REVISED: SEPTEMBER,1968

S	KEY NO.	PART NO.	PART NAME	Q'TY	SALES UNIT	MODEL,	ICA
*	37	67300-13930	ASSY_PANEL,DASH,LOWER(FROM SEPT._64)	1	1	3 SPEED L DRIVE 410	N
	38	67300-14430	ASSY_PANEL,DASH,LOWER(FROM SEPT._64)	1	1	4 SPEED L DRIVE 410	
*	39	67103-10650	ASSY_PANEL,DASH,UPPER	1		R DRIVE 41 0	
*	40	67103-13250	ASSY_PANEL,DASH,UPPER(FROM SEPT._64)	1		R DRIVE 41 0	N
	41	67103-10850	ASSY_PANEL,DASH,UPPER	1		L DRIVE 41 0	
	42	67103-13950	ASSY_PANEL,DASH,UPPER(FROM SEPT._64)	1	1	L DRIVE 41 0	N
	43	62608-10600	PANEL_SUPPORT,STARTING CRANK	1		410	
*	44	62602-10630	ASSY_PANEL,FRONT APRON	1		R DRIVE 41 0	
*	45	62602-10830	ASSY_PANEL,FRONT APRON	1		L DRIVE 41 0	
	46	66400-13230	ASSY_PANEL,DASH SIDE(R .H.)	1	1	410	
	47	66400-10601	ASSY_PANEL,DASH SIDE(R .H.)(FROM SEPT._64)4)	1		410	N
	48	66400-13200	ASSY_PANEL,DASH SIDE(R .H.)	1		410	N
	49	66401-10600	ASSY_PANEL,DASH SIDE(L .H.)	1		410	
	50	66401-10601	ASSY_PANEL,DASH SIDE(L .H.)	1		410	N
	51	66401-13230	ASSY_PANEL,DASH SIDE(L .H.)	1		410	N
	52	63100-10630	ASSY_FENDER,FRONT(R.H.)	1	2	R DRIVE 41 0	
	53	63100-10631	ASSY_FENDER,FRONT(R.H.)(FROM SEPT._64)	1		R DRIVE 41 0	N

Printed in Japan

REVISED: SEPTEMBER,1968

S	KEY NO.	PART NO.	PART NAME	Q'TY	SALES UNIT	MODEL	ICA
	54	63100-10830	ASSY_FENDER,FRONT(R.H.)	1		L DRIVE 410	
	55	63100-10832	ASSY_FENDER,FRONT(R.H.)(FROM SEPT._64)	1		L DRIVE 410	N
	56	63101-10630	ASSY_FENDER,FRONT(L.H.)	1	2	R DRIVE 410	
	57	63101-10631	ASSY_FENDER,FRONT(L.H.)(FROM SEPT._64)	1		R DRIVE 410	N
	58	63101-10830	ASSY_FENDER,FRONT(L.H.)	1		L DRIVE 410	
	59	63101-10834	ASSY_FENDER,FRONT(L.H.)(FROM SEPT._64)	1		L DRIVE 410	N
	60	76400-10630	ASSY_BODY,SILL(R.H.)	1		410	
	61	76401-10630	ASSY_BODY,SILL(L.H.)	1		410	
	62	74310-10600	ASSY_PANEL,SILL BODY,INNER(R.H.)	1		410	
	63	74311-10600	ASSY_PANEL,SILL BODY,INNER(L.H.)	1		410	
	64	66103-10630	ASSY_PILLER,FRONT(R.H.)	1		410	
	65	66103-10631	ASSY_PILLER,FRONT(R.H.)(FROM SEPT._64)	1		410	N
	66	66104-10630	ASSY_PILLER,FRONT(L.H.)	1		410	
	67	66104-10631	ASSY_PILLER,FRONT(L.H.)(FROM SEPT._64)	1		410	N
	68	76110-10600	PILLAR_WINDSHIELD,INNER(R.H.)	1		410	
	69	76110-10601	PILLAR_WINDSHIELD,INNER(R.H.)(FROM NOV._64)	1		410	N
	70	76111-10600	PILLAR_WINDSHIELD,INNER(L.H.)	1		410	
	71	76111-10601	PILLAR_WINDSHIELD,INNER(L.H.)(FROM NOV._64)	1		410	N

Printed in Japan

REVISED: SEPTEMBER,1968

S	KEY NO.	PART NO.	PART NAME	Q'TY	SALES UNIT	MODEL	ICA
*	72	73222-10600	RAIL_SIDE,ROOF,OUTER(R.H.)	1		410	
*	73	73223-10600	RAIL_SIDE,ROOF,OUTER(L.H.)	1		410	
	74	76500-10630	ASSY_PILLAR,CENTER,OUTSIDE(R.H.)	1		410	
	75	76500-10631	ASSY_PILLAR,CENTER,OUTSIDE(R.H.)(FROM SEPT._64)	1		410	N
	76	76501-10630	ASSY_PILLAR,CENTER,OUTSIDE(L.H.)	1		410	
	77	76501-10631	ASSY_PILLAR,CENTER,OUTSIDE(L.H.)(FROM SEPT._64)	1		410	N
	78	76512-10600	PANEL_CENTER PILLAR,INSIDE(R.H.)	1		410	
	79	76512-10601	PANEL_CENTER PILLAR,INSIDE(R.H.)(FROM SEPT._64)	1		410	N
	80	76513-10600	PANEL_CENTER PILLAR,INSIDE(L.H.)	1		410	
	81	76513-10601	PANEL_CENTER PILLAR,INSIDE(L.H.)(FROM SEPT._64)	1		410	N
*	82	76752-10630	PANEL_REAR WHEEL HOUSE,INSIDE(R.H.)	1		SEDAN 410	
*	83	76753-10630	PANEL_REAR WHEEL HOUSE,INSIDE(L.H.)	1		SEDAN 410	
	84	99565-10600	SUPPORT	1		SEDAN 410	
	85	78100-10630	ASSY_FENDER,REAR(R.H.)	1	1	SEDAN 410	
	86	78101-10630	ASSY_FENDER,REAR(L.H.)	1	1	SEDAN 410	
	87	78104-10600	DRIP_REAR FENDER(R.H.)	1	1	SEDAN 410	
	88	78105-10600	DRIP_REAR FENDER(L.H.)	1	1	SEDAN 410	
	89	76720-10600	ASSY_EXTENSION,REAR WHEEL HOUSE(R.H.)	1	1	SEDAN 410	

Printed in Japan

REVISED: SEPTEMBER,1968

S	KEY NO.	PART NO.	PART NAME	Q'TY	SALES UNIT	MODEL	ICA
	90	76721-10600	ASSY_EXTENSION,REAR WHEEL HOUSE(L.H.)	1	1	SEDAN 410	
*	91	76704-10600	PANEL_REAR WHEEL HOUSE ,OUTER,FRONT(R.H.)	1		SEDAN 410	
*	92	76704-10601	PANEL_REAR WHEEL HOUSE ,OUTER,FRONT(R.H.)	1		SEDAN 410	N
	93	76705-10600	PANEL_REAR WHEEL HOUSE ,OUTER,FRONT(L.H.)	1		SEDAN 410	
*	94	76705-10601	PANEL_REAR WHEEL HOUSE ,OUTER,FRONT(L.H.)	1		SEDAN 410	N
	95	76708-10600	PANEL_REAR WHEEL HOUSE ,OUTER,REAR(R.H.)	1	1	SEDAN 410	
	96	76709-10600	PANEL_REAR WHEEL HOUSE ,OUTER,REAR(L.H.)	1	1	SEDAN 410	
	97	76602-10630	PANEL_REAR CORNER(R.H.)	1		SEDAN 410	
*	98	76602-12410	PANEL_REAR CORNER(R.H.)	1	1	SS 410	
	99	76603-10630	PANEL_REAR CORNER(L.H.)	1		SEDAN 410	
*	100	76603-12410	PANEL_REAR CORNER(L.H.)	1	1	SS 410	
	101	76610-10600	PANEL_REAR CORNER,INSIDE(R.H.)	1	10	SEDAN 410	
	102	76611-10600	PANEL_REAR CORNER,INSIDE(L.H.)	1	10	SEDAN 410	
	103	73210-10600	ASSY_RAIL,ROOF,FRONT	1	1	SEDAN 410	
	104	73102-10630	PANEL_ROOF	1		SEDAN 410	
*	105	79704-10600	ASSY_RAIL,ROOF,REAR	1	1	SEDAN 410	
*	106	65100-10630	ASSY_PANEL,HOOD	1	1	410	
	107	66311-10630	ASSY_PANEL,COWL TOP	1	1	410	
	108	66330-10650	ASSY_GRILLE,COWL TOP	1	1	410	

Printed in Japan

REVISED: SEPTEMBER,1968

S	KEY NO.	PART NO.	PART NAME	Q'TY	SALES UNIT	MODEL	ICA
	109	68100-10630	ASSY_PANEL,INSTRUMENT	1		R DRIVE 410	
*	110	68100-10830	ASSY_PANEL,INSTRUMENT	1		L DRIVE 410	
	111	79109-10630	ASSY_PANEL,REAR WAIST	1		SEDAN 410	
*	112	79100-10630	ASSY_PANEL,REAR	1	1	SEDAN 410	
	113	84300-10630	ASSY_LID,TRUNK	1		SEDAN 410	
	114	73102-10900	PANEL_ROOF	1		WAGON 410	
	115	74500-10902	ASSY_PANEL,REAR FLOOR	1	1	WAGON 410	
	116	73206-10930	ASSY_RAIL,ROOF,INSIDE, REAR(R.H.)	1		WAGON 410	
	117	73206-10931	ASSY_RAIL,ROOF,INSIDE, REAR(R.H.)	1	1	WAGON 410	N
	118	73207-10930	ASSY_RAIL,ROOF,INSIDE, REAR(L.H.)	1		WAGON 410	
	119	73207-10931	ASSY_RAIL,ROOF,INSIDE, REAR(L.H.)	1	1	WAGON 410	N
	120	76606-10930	PILLAR_INSIDE,REAR,UPPER(R.H.)	1	1	WAGON 410	
	121	76607-10930	PILLAR_INSIDE,REAR,UPPER(L.H.)	1	1	WAGON 410	
	122	76608-10930	PILLAR_INSIDE,REAR,LOWER(R.H.)	1	1	WAGON 410	
	123	76609-10930	PILLAR_INSIDE,REAR,LOWER(L.H.)	1		WAGON 410	
	124	76704-10930	ASSY_WHEEL HOUSE,REAR, OUTER,FRONT(R.H.)	1		WAGON 410	
	125	76704-10931	ASSY_WHEEL HOUSE,REAR, OUTER,FRONT(R.H.)	1		WAGON 410	N
	126	76705-10930	ASSY_WHEEL HOUSE,REAR, OUTER,FRONT(L.H.)	1		WAGON 410	
	127	76705-10931	ASSY_WHEEL HOUSE,REAR, OUTER,FRONT(L.H.)	1		WAGON 410	N

Printed in Japan

REVISED: SEPTEMBER,1968

S	KEY NO.	PART NO.	PART NAME	Q'TY	SALES UNIT	MODEL	ICA
	128	76349-10930	ASSY_RISER,AUXILIARY F LOOR SIDE(R.H.)	1	1	WAGON 410	
	129	76350-10930	ASSY_RISER,AUXILIARY F LOOR SIDE(L.H.)	1		WAGON 410	
	130	76610-10930	ASSY_WHEEL HOUSE,REAR, OUTER,REAR(R.H.)	1		WAGON 410	
	131	76611-10930	ASSY_WHEEL HOUSE,REAR, OUTER,REAR(L.H.)	1		WAGON 410	
	132	76750-10930	ASSY_WHEEL HOUSE,REAR, INNER(R.H.)	1		WAGON 410	
	133	76750-10931	ASSY_WHEEL HOUSE,REAR, INNER(R.H.)	1	1	WAGON 410	N
	134	76751-10930	ASSY_WHEEL HOUSE,REAR, INNER(L.H.)	1		WAGON 410	
	135	76751-10931	ASSY_WHEEL HOUSE,REAR, INNER(L.H.)	1	1	WAGON 410	N
	136	73226-10930	RAIL_REAR CORNER,OUTER (R.H.)	1	1	WAGON 410	
	137	73227-10930	RAIL_REAR CORNER,OUTER (L.H.)	1	1	WAGON 410	
	138	76224-10930	ASSY_PANEL,TAIL PILLAR ,INNER(R.H.)	1	1	WAGON 410	
	139	76225-10930	ASSY_PANEL,TAIL PILLAR ,INNER(L.H.)	1	1	WAGON 410	
	140	76202-10930	ASSY_PILLAR,TAIL,MAIN, LOWER(R.H.)	1	1	WAGON 410	
	141	76221-10930	PILLAR_TAIL,OUTER(L.H.)	1	1	WAGON 410	
	142	76100-10930	ASSY_PANEL,BODY SIDE(R .H.)	1	1	WAGON 410	
	143	76101-10930	ASSY_PANEL,BODY SIDE(L .H.)	1	1	WAGON 410	
	144	76213-10930	ASSY_RAIL,ROOF SIDE,OU TER,REAR(R.H.)	1	5	WAGON 410	

Printed in Japan

REVISED: SEPTEMBER,1968

S	KEY NO.	PART NO.	PART NAME	Q'TY	SALES UNIT	MODEL	ICA
	145	76214-10930	ASSY_RAIL,ROOF SIDE,OUTER,REAR(L.H.)	1		WAGON 410	
	146	78100-10930	ASSY_FENDER,REAR(R.H.)	1		WAGON 410	
	147	78101-10930	ASSY_FENDER,REAR(L.H.)	1		WAGON 410	
	148	73260-10950	ASSY_RAIL,ROOF TAIL	1	1	WAGON 410	
*	149	90101-10930	ASSY_PANEL,TAIL GATE	1		WAGON 410	
*	150	79101-10930	ASSY_PANEL,REAR	1	1	WAGON 410	
	151	17270-10950	ASSY_COVER,FILLER NECK	1	1	WAGON 410	
	152	96220-10900	ASSY_HINGE,LICENCE PLATE LOCK	1	1	WAGON 410	
	153	79110-10930	ASSY_RAINFORCEMENT,BRACE,REAR PANEL	1	1	WAGON 410	
	154	76720-10900	ASSY_EXTENSION,REAR WHEEL HOUSE(R.H.)	1	1	WAGON 410	
	155	76721-10600	ASSY_EXTENSION,REAR WHEEL HOUSE(L.H.)	1	1	WAGON 410	
*	156	74800-10800	ASSY_MEMBER,FRONT	1		410	
	157	74860-10600	ASSY_MEMBER,CROSS,1ST	1	1	410	
	158	74320-10600	ASSY_MEMBER,CROSS,2ND	1	1	410	
*	159	74804-10600	ASSY_MEMBER,SIDE,REAR(R.H.)	1		410	
*	160	74805-10600	ASSY_MEMBER,SIDE,REAR(L.H.)	1		410	

Printed in Japan

REVISED: SEPTEMBER,1968

NOTE

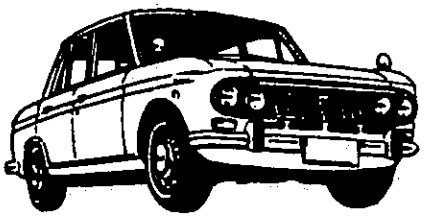

NOTE

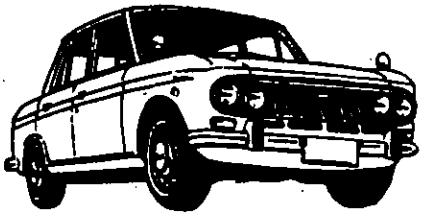

REAR SEAT (WAGON)

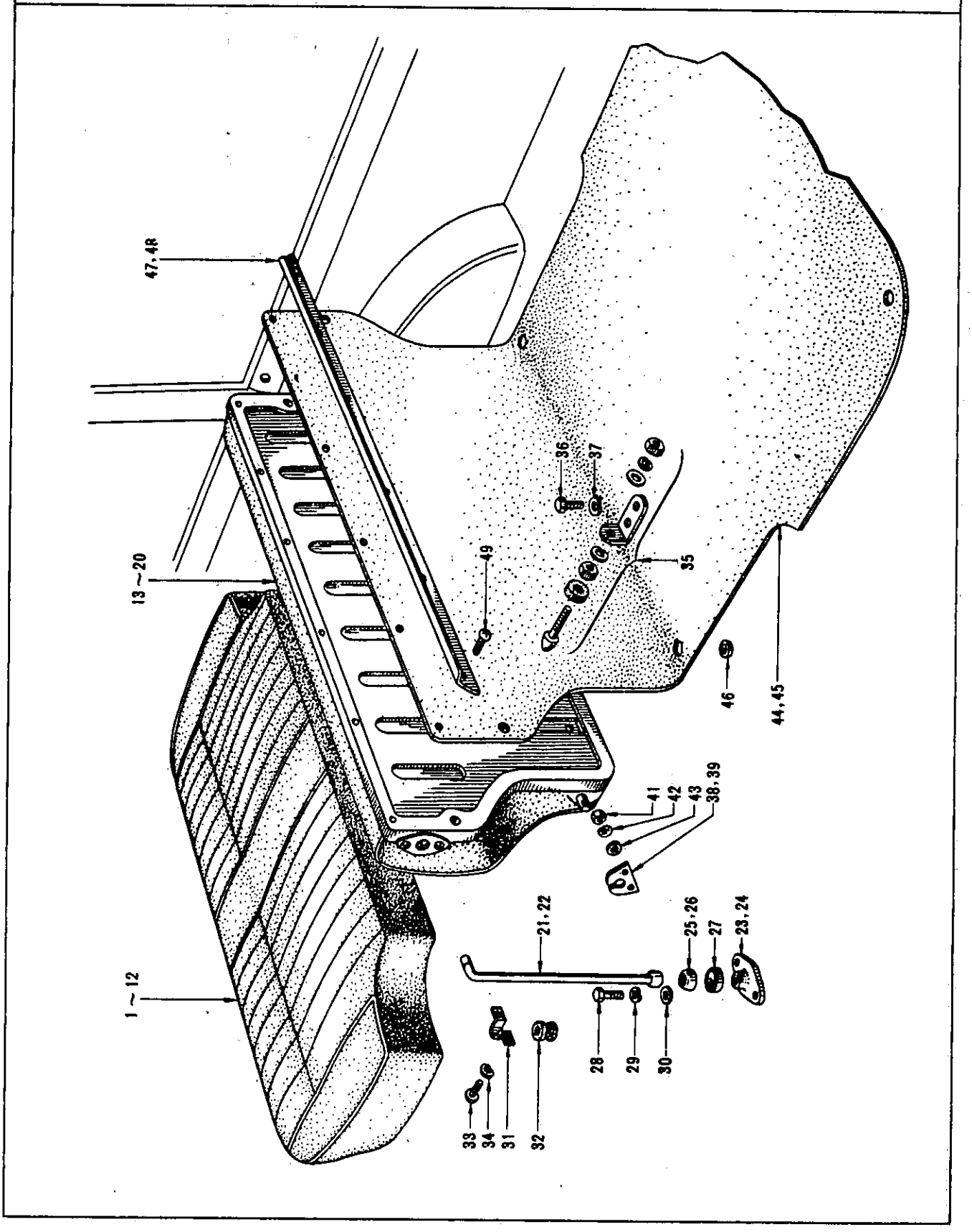

S	KEY NO.	PART NO.	PART NAME	Q'TY	SALES UNIT	MODEL	ICA
			REAR SEAT (WAGON)				
	1	88300-11000	ASSY_CUSHION,REAR SEAT (RED)	1		WAGON 410	
	2	88300-11004	ASSY_CUSHION,REAR SEAT (RED)	1		WAGON 410	N
	3	88300-13500	ASSY_CUSHION,REAR SEAT (RED)	1		WAGON 410	N
	4	88300-11001	ASSY_CUSHION,REAR SEAT (BLUE)	1		WAGON 410	
	5	88300-11005	ASSY_CUSHION,REAR SEAT (BLUE)	1		WAGON 410	N
	6	88300-13501	ASSY_CUSHION,REAR SEAT (BLUE)	1		WAGON 410	N
	7	88300-11002	ASSY_CUSHION,REAR SEAT (BROWN)	1		WAGON 410	
	8	88300-11006	ASSY_CUSHION,REAR SEAT (BROWN)	1		WAGON 410	N
	9	88300-13502	ASSY_CUSHION,REAR SEAT (BROWN)	1		WAGON 410	N
	10	88300-11003	ASSY_CUSHION,REAR SEAT (GREEN)	1		WAGON 410	
	11	88300-11007	ASSY_CUSHION,REAR SEAT (GREEN)	1		WAGON 410	N
	12	88300-13503	ASSY_CUSHION,REAR SEAT (GREEN)	1		WAGON 410	N
	13	88600-11000	ASSY_BACK,REAR SEAT(RED)	1		WAGON 410	
	14	88600-13500	ASSY_BACK,REAR SEAT(RED)	1		WAGON 410	N
	15	88600-11001	ASSY_BACK,REAR SEAT(BLUE)	1		WAGON 410	

Printed in Japan

REVISED: SEPTEMBER,1968

S	KEY NO.	PART NO.	PART NAME	Q'TY	SALES UNIT	MODEL	ICA
	16	88600-13501	ASSY_BACK,REAR SEAT(BLUE)	1		WAGON 410	N
	17	88600-11002	ASSY_BACK,REAR SEAT(BROWN)	1		WAGON 410	
	18	88600-13502	ASSY_BACK,REAR SEAT(BROWN)	1		WAGON 410	N
	19	88600-11003	ASSY_BACK,REAR SEAT(GREEN)	1		WAGON 410	
	20	88600-13503	ASSY_BACK,REAR SEAT(GREEN)	1		WAGON 410	N
	21	88820-10900	ASSY_STAY,REAR SEAT BACK	2		WAGON 410	
	22	88820-10901	ASSY_STAY,REAR SEAT BACK	2		WAGON 410	N
	23	88823-10900	BRACKET_REAR SEAT BACK HOLDER(OUTER)	2		WAGON 410	
	24	88823-10901	BRACKET_REAR SEAT BACK HOLDER(R.H.)	2	5	WAGON 410	N
	25	88824-10900	BRACKET_REAR SEAT BACK HOLDER(INNER)	2		WAGON 410	
	26	88824-10901	BRACKET_REAR SEAT BACK HOLDER(L.H.)	2	5	WAGON 410	N
	27	88825-10900	PIECE_REAR SEAT BACK HOLDER	2	2	WAGON 410	
	28	00114-41610	BOLT	4	50	WAGON 410	
	29	00915-11410	WASHER_LOCK	4		WAGON 410	
	30	00915-41410	WASHER_PLAIN	4		WAGON 410	
	31	88826-10900	CLAMP_REAR SEAT BACK STAY	2	1	WAGON 410	
	32	88827-10900	CLAMP_RUBBER,REAR SEAT BACK STAY	2	10	WAGON 410	
	33	00514-01010	SCREW	4	50	WAGON 410	
	34	00915-41010	WASHER_PLAIN	4		WAGON 410	

Printed in Japan

REVISED: SEPTEMBER,1968

S	KEY NO.	PART NO.	PART NAME	Q'TY	SALES UNIT	MODEL	ICA
*	35	88810-10950	SET_CATCHER,REAR SEAT BACK	2	1	WAGON 410	
	36	00114-41610	BOLT	4	50	WAGON 410	
	37	00915-11410	WASHER_LOCK	4		WAGON 410	
*	38	88801-10900	HINGE_REAR SEAT BACK	2		WAGON 410	
	39	88801-10901	HINGE_REAR SEAT BACK	2	1	WAGON 410	Y
	40	88803-10900	PROTECTOR_HINGE,REAR SEAT	2	1	WAGON 410	
	41	00911-31510	NUT	4	50	WAGON 410	
	42	00915-11510	WASHER_LOCK	4		WAGON 410	
	43	00915-41510	WASHER_PLAIN	4		WAGON 410	
	44	74920-10900	ASSY_MAT,AUXILIARY FLOOR	1		WAGON 410	
	45	74920-10901	ASSY_MAT,AUXILIARY FLOOR(FROM 649)	1		WAGON 410	N
	46	61224-35210	FASTENER_MALE	4	1	WAGON 410	
	47	88819-10900	STOPPER_REAR SEAT BACK	1	1	WAGON 410	
	48	88819-10901	STOPPER_REAR SEAT BACK	1	1	WAGON 410	N
	49	00336-81220	SCREW	8		WAGON 410	

Printed in Japan

REVISED: SEPTEMBER,1968

NOTE.

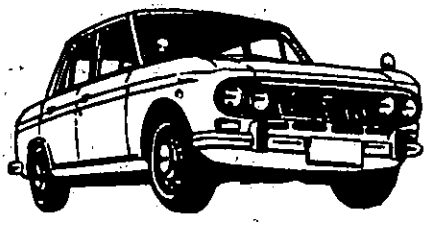

NOTE

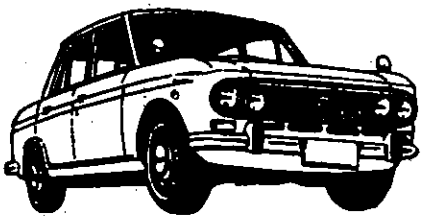

FRONT & REAR SEAT

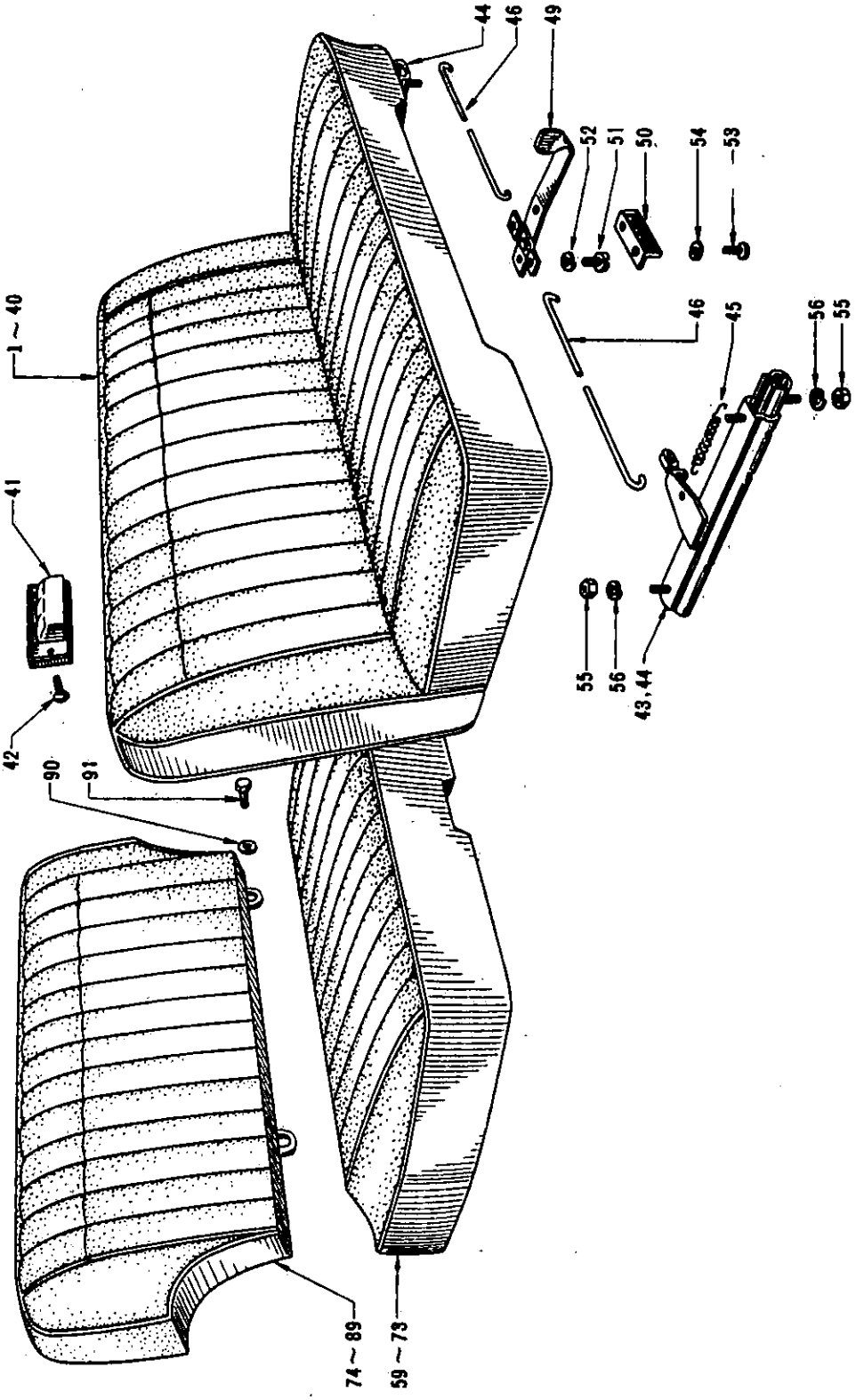

S	KEY NO.	PART NO.	PART NAME	Q'TY	SALES UNIT	MODEL	ICA
			FRONT & REAR SEAT				
	1	86000-10800	ASSY_SEAT,FRONT(RED)	1		L.LN(A.B TYPE)410	
	2	86000-13300	ASSY_SEAT,FRONT(RED)	1		L.LN(A.B TYPE)410	N
	3	86000-10801	ASSY_SEAT,FRONT(BLUE)	1		L.LN(A.B TYPE)410	
	4	86000-13301	ASSY_SEAT,FRONT(BLUE)	1		L.LN(A.B TYPE)410	N
	5	86000-10802	ASSY_SEAT,FRONT(BRONU)	1		L.LN(A.B TYPE)410	
	6	86000-13302	ASSY_SEAT,FRONT(BROWN)	1		L.LN(A.B TYPE)410	N
	7	86000-10803	ASSY_SEAT,FRONT(GREEN)	1		L.LN(A.B TYPE)410	
	8	86000-13303	ASSY_SEAT,FRONT(GREEN)	1		L.LN(A.B TYPE)410	N
	9	86000-10804	ASSY_SEAT,FRONT(RED)	1		L.LN(D TYPE)410	
	10	86000-13304	ASSY_SEAT,FRONT(RED)	1		L.LN(D TYPE)410	N
	11	86000-10805	ASSY_SEAT,FRONT(BLUE)	1		L.LN(D TYPE)410	
	12	86000-13305	ASSY_SEAT,FRONT(BLUE)	1		L.LN(D TYPE)410	N
	13	86000-10806	ASSY_SEAT,FRONT(BROWN)	1		L.LN(D TYPE)410	
	14	86000-13306	ASSY_SEAT,FRONT(BROWN)	1		L.LN(D TYPE)410	N
	15	86000-10807	ASSY_SEATFRONT(GREEN)	1		L.LN(D TYPE)410	

Printed in Japan

REVISED: SEPTEMBER,1968

S	KEY NO.	PART NO.	PART NAME	Q'TY	SALES UNIT	MODEL	ICA
	16	86000-13307	ASSY_SEAT,FRONT(GREEN)	1		L.LN(D TYPE)410	N
	17	86000-11600	ASSY_SEAT,FRONT(RED)	1		U.L.UN.LUN (A.B TYPE) 410	
	18	86000-13800	ASSY_SEAT,FRONT(RED)	1		U.L.UN.LUN (A.B TYPE) 410	N
	19	86000-13801	ASSY_SEAT,FRONT(BLUE)	1		U.L.UN.LUN (A.B TYPE) 410	N
	20	86000-11602	ASSY_SEAT,FRONT(BROWN)	1		U.L.UN.LUN (A.B TYPE) 410	
	21	86000-13802	ASSY_SEAT,FRONT(BROWN)	1		U.L.UN.LUN (A.B TYPE) 410	N
	22	86000-11603	ASSY_SEAT,FRONT(GREEN)	1		U.L.UN.LUN (A.B TYPE) 410	
	23	86000-13802	ASSY_SEAT,FRONT(GREEN)	1		U.L.UN.LUN (A.B TYPE) 410	N
	24	86000-11604	ASSY_SEAT,FRONT(RED)	1		U.LU.UN.LUN(D TYPE)410	
	25	86000-13804	ASSY_SEAT,FRONT(RED)	1		U.LU.UN.LUN(D TYPE)410	N
	26	86000-11605	ASSY_SEAT,FRONT(BLUE)	1		U.LU.UN.LUN(D TYPE)410	
	27	86000-13805	ASSY_SEAT,FRONT(BLUE)	1		U.LU.UN.LUN(D TYPE)410	N
	28	86000-11606	ASSY_SEAT,FRONT(BROWN)	1		U.LU.UN.LUN.(D TYPE410	

Printed in Japan

REVISED: SEPTEMBER,1968

S	KEY NO.	PART NO.	PART NAME	Q'TY	SALES UNIT	MODEL	ICA
	29	86000-13806	ASSY_SEAT,FRONT(BROWN)	1		U.LU.UN.LUN.(D TYP)410	N
	30	86000-11607	ASSY_SEAT,FRONT(GREEN)	1		U.LU.UN.LUN.(D TYP)410	
	31	86000-13807	ASSY_SEAT,FRONT(GREEN)	1		U.LU.UN.LUN.(D TYP)410	N
	32	86000-11000	ASSY_SEAT,FRONT(RED)	1		WAGON 410	
	33	86000-11004	ASSY_SEAT,FRONT(RED)	1		WAGON 410	N
	34	86000-13500	ASSY_SEAT,FRONT(RED)	1		WAGON 410	Y
	35	86000-11001	ASSY_SEAT,FRONT(BLUE)	1		WAGON 410	
	36	86000-11005	ASSY_SEAT,FRONT(BLUE)	1		WAGON 410	N
	37	86000-13501	ASSY_SEAT,FRONT(BLUE)	1		WAGON 410	Y
	38	86000-11002	ASSY_SEAT,FRONT(BROWN)	1		WAGON 410	
	39	86000-11003	ASSY_SEAT,FRONT(GREEN)	1		WAGON 410	
	40	86000-11007	ASSY_SEAT,FRONT(GREEN)	1		WAGON 410	N
*	41	96501-10601	ASSY_ASH TRAY	1	1	410	
	42	00330-82520	SCREW	1	50	410	
	43	86501-10800	ASSY_SLIDE,FRONT SEAT(R.H.)	1		410	
	44	86502-10800	ASSY_SLIDE,FRONT SEAT(L.H.)	1		410	
	45	86520-10800	SPRING_HELPER,FRONT SEAT SLIDE	2	10	410	
	46	86532-10600	WIRE_PULL,SLIDE LOCK,FRONT SEAT	2	10	410	
	47	86905-11600	FINISH_SEAT BELT	2	2	U.LU.UN.LUN.410	
	48	00334-00810	SCREW TO FINISH	8		U.LU.UN.LUN.410	

S	KEY NO.	PART NO.	PART NAME	Q'TY	SALES UNIT	MODEL	ICA
	49	86522-10600	ASSY_LEVER,ADJUSTING,FRONT SEATT	1		410	
	50	86527-10600	GUIDE_FRONT SEAT ADJUSTING LEVER	1		410	
	51	00314-01210	SCREW TO FIX LEVER	2	50	410	
	52	00915-11010	WASHER_LOCK TO FIX LEVER	2	100	410	
	53	00310-61210	SCREW TO FUX GUIDE	2	50	410	
	54	00915-10610	WASHER_LOCK TO FIX GUIDE	2		410	
	55	00911-14510	NUT TO FIX FRONT SEAT	8		410	
	56	00915-11510	WASHER_LOCK TO FIX FRONT SEAT	8		410	
*	57	86800-11600	ASSY_BELT,FRONT SEAT	2		U.LU.UN.LUN.SS 410	
	58	86800-11601	ASSY_BELT,FRONT SEAT	2	1	U.LU.UN.LUN.SS 410	Y
	59	88300-11400	ASSY_CUSHION,REAR SEAT (RED)	1		U.L.LU.UN.LN.LUN.SS(D TYPE)410	
	60	88300-13608	ASSY_CUSHION,REAR SEAT (RED)	1		U.L.LU.UN.LN.LUN.SS(D TYPE)410	N
	61	88300-11401	ASSY_CUSHION,REAR SEAT (BLUE)	1	1	U.L.LU.UN.LN.LUN.SS(D TYPE)410	
	62	88300-13609	ASSY_CUSHION,REAR SEAT (BLUE)	1		U.L.LU.UN.LN.LUN.SS(D TYPE)410	N
	63	88300-11402	ASSY_CUSHION,REAR SEAT (BROWN)	1		U.L.LU.UN.LN.LUN.SS(D TYPE)410	
	64	88300-13610	ASSY_CUSHION,REAR SEAT (BROWN)	1		U.L.LU.UN.LN.LUN.SS(D TYPE)410	N

Printed in Japan

REVISED: SEPTEMBER,1968

S	KEY NO.	PART NO.	PART NAME	Q'TY	SALES UNIT	MODEL	ICA
	65	88300-11403	ASSY_CUSHION,REAR SEAT (GREEN)	1		U.L.LU.UN. LN.LUN.SS(D TYPE)410	
	66	88300-13611	ASSY_CUSHION,REAR SEAT (GREEN)	1		U.L.LU.UN. LN.LUN.SS(D TYPE)410	N
	67	88300-10600	ASSY_CUSHION,REAR SEAT (RED)	1	1	A.B TYPE 4 10	
	68	88300-13206	ASSY_CUSHION,REAR SEAT (RED)	1		A.B TYPE 4 10	N
	69	88300-10601	ASSY_CUSHION,REAR SEAT (BLUE)	1		A.B TYPE 4 10	
	70	88300-13207	ASSY_CUSHION,REAR SEAT (BLUE)	1		A.B TYPE 4 10	N
	71	88300-11600	ASSY_CUSHION,REAR SEAT (BROWN)	1		A.B TYPE 4 10	
	72	88300-10602	ASSY_CUSHION,REAR SEAT (GREEN)	1		A.B TYPE 4 10	
	73	88300-13208	ASSY_CUSHION,REAR SEAT (GREEN)	1		A.B TYPE 4 10	N
	74	88600-11400	ASSY_BACK,REAR SEAT(RE D)	1		U.L.LU.UN. LN.LUN.SS(D TYPE)410	
	75	88600-13600	ASSY_BACK,REAR SEAT(RE D)	1		U.L.LU.UN. LN.LUN.SS(D TYPE)410	N
	76	88600-11401	ASSY_BACK,REAR SEAT(BL UE)	1		U.L.LU.UN. LN.LUN.SS(D TYPE)410	
	77	88600-13601	ASSY_BACK,REAR SEAT(BL UE)	1		U.L.LU.UN. LN.LUN.SS(D TYPE)410	N
	78	88600-11402	ASSY_BACK,REAR SEAT(BR OWN)	1		U.L.LU.UN. LN.LUN.SS(D TYPE)410	
	79	88600-13602	ASSY_BACK,REAR SEAT(BR OWN)	1		U.L.LU.UN. LN.LUN.SS(D TYPE)410	N

Printed in Japan

REVISED: SEPTEMBER,1968

S	KEY NO.	PART NO.	PART NAME	Q'TY	SALES UNIT	MODEL	ICA
	80	88600-11403	ASSY_BACK,REAR SEAT(GREEN)	1		U.L.LU.UN.LN.LUN.SS(D TYPE)410	
	81	88600-13603	ASSY_BACK,REAR SEAT(GREEN)	1		U.L.LU.UN.LN.LUN.SS(D TYPE)410	N
	82	88600-10600	ASSY_BACK,REAR SEAT(RED)	1		A,B TYPE 410	
	83	88600-13200	ASSY_BACK,REAR SEAT(RED)	1		A,B TYPE 410	N
	84	88600-10601	ASSY_BACK,REAR SEAT(BLUE)	1		A,B TYPE 410	
	85	88600-13201	ASSY_BACK,REAR SEAT(BLUE)	1		A,B TYPE 410	N
	86	88600-11600	ASSY_BACK,REAR SEAT(BROWN)	1		A,B TYPE 410	
	87	88600-13800	ASSY_BACK,REAR SEAT(BROWN)	1		A,B TYPE 410	N
	88	88600-10602	ASSY_BACK,REAR SEAT(GREEN)	1		A,B TYPE 410	
	89	88600-13202	ASSY_BACK,REAR SEAT(GREEN)	1		A,B TYPE 410	N
	90	00915-51410	WASHER_PLAIN TO FIX BACK	2		410	
	91	00314-41610	SCREW TO FIX BACK	2	50	410	
	92	87000-11800	ASSY_SEAT,DRIVER(RED)	1		SS(D TYPE) 410	
	93	87000-14000	ASSY_SEAT,DRIVER(RED)(FROM SEPT._64)	1		SS(D TYPE) 410	N
	94	87000-14001	ASSY_SEAT,DRIVER(BLUE)(FROM SEPT._64)	1		SS(D TYPE) 410	N
	95	87000-11802	ASSY_SEAT,DRIVER(BROWN)	1		SS(D TYPE) 410	
	96	87000-14002	ASSY_SEAT,DRIVER(BROWN)(FROM SEPT._64)	1		SS(D TYPE) 410	N

Printed in Japan

REVISED: SEPTEMBER,1968

NOTE

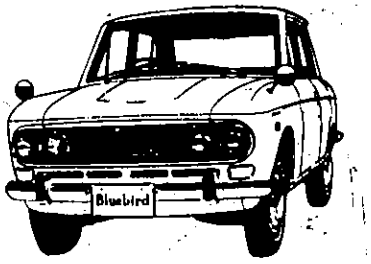

ENGINE ASSEMBLIES

Note: This figure will be given later.

S	KEY NO.	PART NO.	PART NAME	Q'TY	SALES UNIT	MODEL	ICA
			ENGINE ASSEMBLIES				
	1	10001-16953	ASSY-ENGINE,WITH CLUTCH FOR 40 AH BATTERY(TO SEP.-65)	1	1	1.3L(3 SPEED)411	
	2	10001-16940	ASSY-ENGINE,WITH CLUTCH FOR 40 AH BATTERY(FROM OCT.-66 TO 67-SEP.) ANTI-AIR POLLUTION	1		1.3L(3 SPEED)411	Y
	3	10001-16954	ASSY-ENGINE,WITH CLUTCH FOR 50 AH BATTERY(TO SEP.-65)	1		1.3L(3 SPEED)411	
	4	10001-16941	ASSY-ENGINE,WITH CLUTCH FOR 50 AH BATTERY(FROM OCT.-66 TO 67-SEP.) ANTI-AIR POLLUTION	1		1.3L(3 SPEED)411	Y
	5	10001-16953	ASSY-ENGINE,WITH CLUTCH FOR 40 AH BATTERY(TO SEP.-65)	1	1	1.3L(4 SPEED)411 EXC.U.S.A.	
	6	10001-16956	ASSY-ENGINE,WITH CLUTCH FOR 40 AH BATTERY(FROM OCT.-65 TO 66-SEP.)	1		1.3L(4 SPEED)411 EXC.U.S.A.	N
	7	10001-16943	ASSY-ENGINE,WITH CLUTCH FOR 40 AH BATTERY(FROM OCT.-66 TO 67-SEP.) ANTI-AIR POLLUTION	1		1.3L(4 SPEED)411 EXC.U.S.A.	N
	8	10001-16954	ASSY-ENGINE,WITH CLUTCH FOR 50 AH BATTERY(TO SEP.-65)	1		1.3L(4 SPEED)411 EXC.U.S.A.	
	9	10001-16957	ASSY-ENGINE,WITH CLUTCH FOR 50 AH BATTERY(FROM OCT.-65 TO 66-SEP.)	1	1	1.3L(4 SPEED)411 EXC.U.S.A.	N
	10	10001-16944	ASSY-ENGINE,WITH CLUTCH FOR 50 AH BATTERY(FROM OCT.-66 TO 67-SEP.) ANTI-AIR POLLUTION	1		1.3L(4 SPEED)411 EXC.U.S.A.	N

REVISED: SEPTEMBER,1968

Printed in Japan

S	KEY NO.	PART NO.	PART NAME	Q'TY	SALES UNIT	MODEL	ICA
	11	10001-16945	ASSY-ENGINE,WITH CLUTCH FOR 40 AH BATTERY ANTI-RATIONOISE,ANTI-AIR POLLUTION(FROM 66-OCT.TO 67-SEP.)	1		1.3L(4 SPEED)411 EXC U.S.A.	
	12	10001-16937	ASSY-ENGINE,WITH CLUTCH FOR 50 AH BATTERY ANTI-RADIONOISE,ANTI-AIR POLLUTION(FROM 66-OCT.TO 67-SEP.)	1		1.3L(4 SPEED)411 EXC U.S.A.	
*	13	10001-16751	ASSY-ENGINE,WITH CLUTCH FOR 40 AH BATTERY(TO 65-SEP.)	1		MTK 411	
	14	10001-16752	ASSY-ENGINE,WITH CLUTCH FOR 40 AH BATTERY ANTI-AIR POLLUTION(FROM 66-OCT.TO 67-SEP.)	1		MTK 411	N
*	15	10001-17052	ASSY-ENGINE,WITH CLUTCH FOR 40 AH BATTERY ANTI-AIR POLLUTION(TO 65-SEP.)	1		LUT,WLUT (U.S.A.) 411	
*	16	10001-17054	ASSY-ENGINE,WITH CLUTCH FOR 40 AH BATTERY ANTI-AIR POLLUTION(FROM 65-OCT.TO 67-SEP.)	1		LUT,WLUT (U.S.A.) 411	N
	17	10001-18950	ASSY-ENGINE,WITH CLUTCH FOR 40 AH BATTERY ANTI-AIR POLLUTION(TO E/#R-40000)	1	1	RL-UTK,WRL-UTK(U.S.A.)411	
	18	10001-18830	ASSY-ENGINE,WITH CLUTCH FOR 40 AN BATTERY ANTI-AIR POLLUTION(FROM E/#R-40001)	1		RL-UTK,WRL-UTK(U.S.A.)411	N
	19	10001-18831	ASSY-ENGINE,WITH CLUTCH	1		OP.RL-UTK, WRL-UTK411	
	20	10000-24550	ASSY-ENGINE,WITH AUTO-TRANS-MISSION(TO E/# R-40000)	1	1	RL-UAK,WRL-UAK(U.S.A.)411	
	21	10001-18850	ASSY-ENGINE,WITH AUTO-TRANS-MISSION(FROM E/# R-40001)	1		RL-UAK,WRL-UAK(U.S.A.)411	N

Printed in Japan

REVISED: SEPTEMBER,1968

S	KEY NO.	PART NO.	PART NAME	Q'TY	SALES UNIT	MODEL	ICA
a	22	10001-18851	ASSY-ENGINE,WITH TORGU E CON	1		OP,RL-UAK, WRL-UAK411	
	23	10102-13200	ASSY-ENGINE,BARE	1	1	1.3L 411	
	24	10102-15800	ASSY-ENGINE,BARE(TO E/ #R-40000)	1	1	1.6L 411	
	25	10102-18810	ASSY-ENGINE,BARE FOR 5 -BEAR-ING(FROM E/# R-4 0001)	1	1	1.6L 411	N
	26	10103-13200	ASSY-ENGINE,SHORT	1	1	1.3L 411	
	27	10103-15900	ASSY-ENGINE,SHORT(TO E /#R-40000)	1	1	1.6L 411	
	28	10103-18815	ASSY-ENGINE,SHORT FOR 5-BEARING(FROM E/#R-40 001)	1	1	1.6L 411	N
	29	10101-16525	KIT-GASKET,ENGINE	1	1	1.3L 411	
	30	10101-14625	KIT-GASKET,ENGINE	1	1	1.6L 411	

NOTE

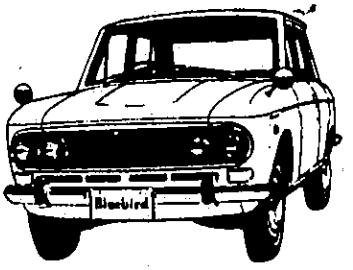

NOTE

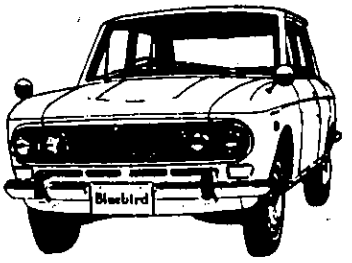

CYLINDER BLOCK (1.3 L)

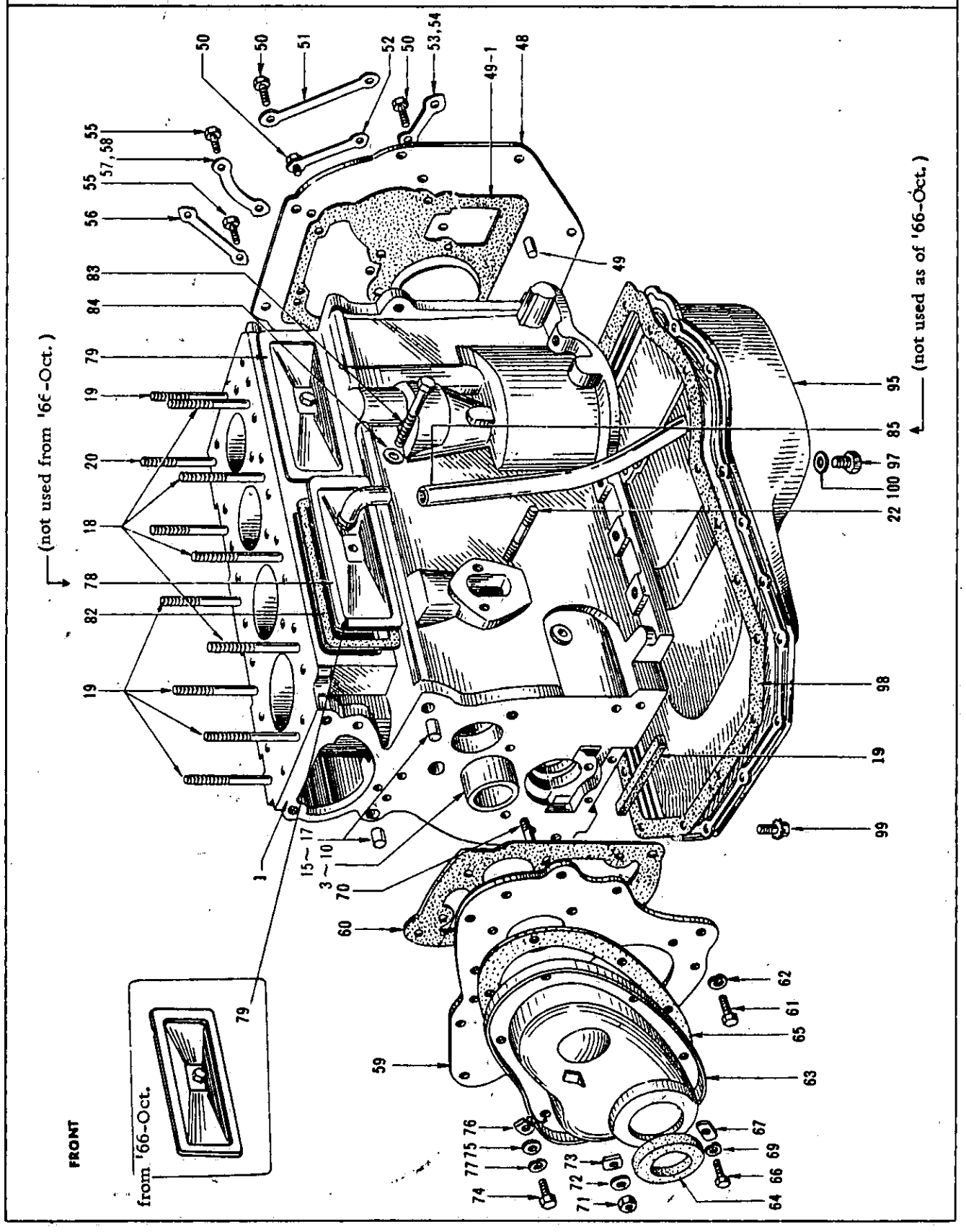

SEPTEMBER, 1968 Printed in Japan

CYLINDER BLOCK (1.3 L)

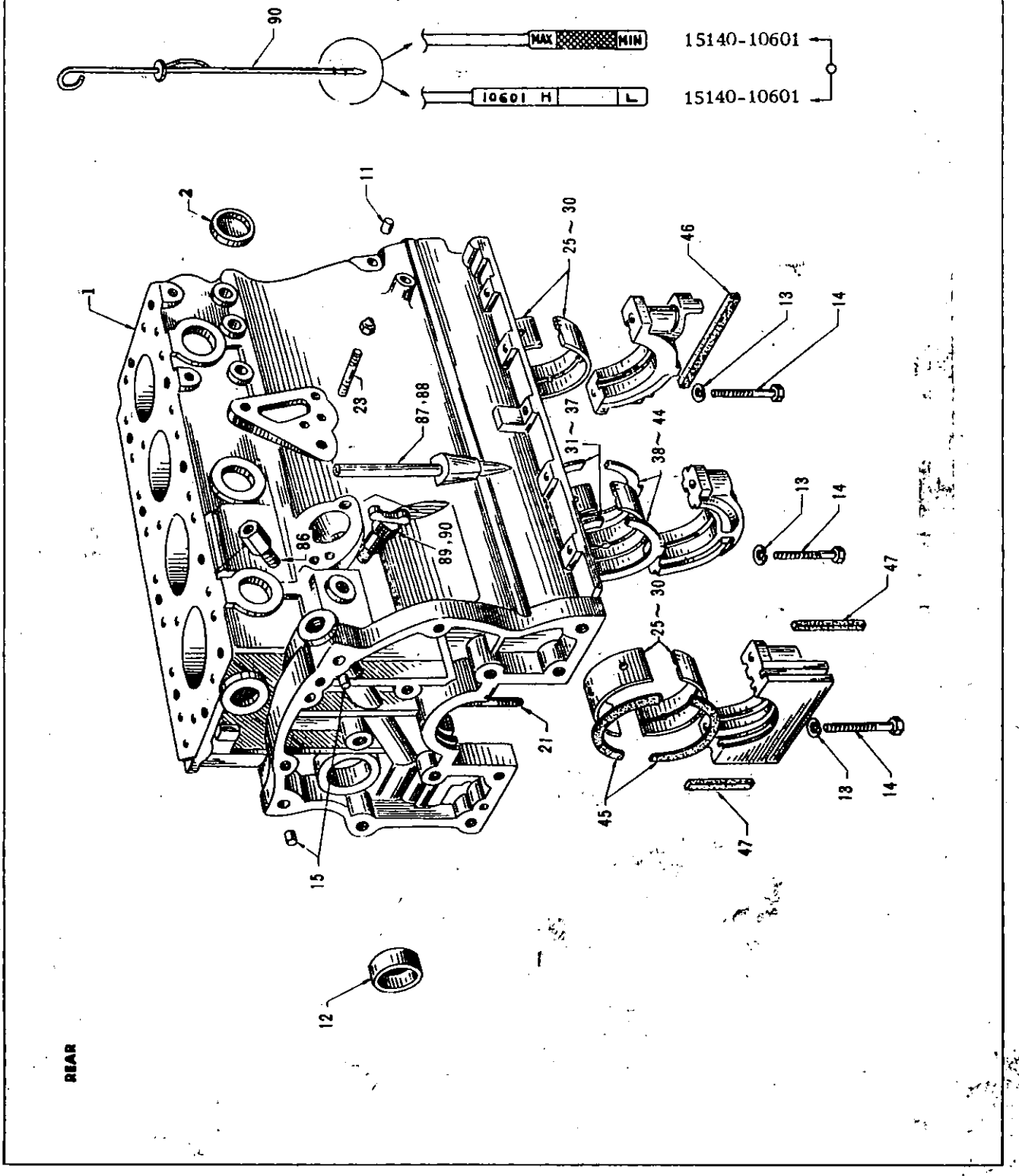

S	KEY NO.	PART NO.	PART NAME	Q'TY	SALES UNIT	MODEL	ICA
			CYLINDER BLOCK (1.3 L)				
	1	11010-13200	ASSY-BLOCK,CYLINDER,WITH PLUGS	1	1	1.3L 411(EXC.UTK)	
	2	00933-13500	PLUG-TAPER,35	4	50	1.3L 411	
	3	13002-08000	SET-BUSHING,CAM SHAFT	1	1	1.3L 411	
	4	13002-13200	SET-BUSHING,CAM SHAFT	1	1	1.3L 411	Y
	5	13003-08000	SET-BUSHING,CAM SHAFT(U/S 0.25MM)	1		1.3L 411	
	6	13003-13200	SET-BUSHING,CAM SHAFT(U/S 0.25MM)	1	1	1.3L 411	Y
	7	13004-08000	SET-BUSHING,CAM SHAFT(U/S 0.50MM)	1		1.3L 411	
	8	13004-13200	SET-BUSHING,CAM SHAFT(U/S 0.50MM)	1	1	1.3L 411	Y
	9	13004-08001	SET-BUSHING,CAM SHAFT(U/S 0.75MM)	1	1	1.3L 411	
	10	13004-13201	SET-BUSHING,CAM SHAFT(U/S 0.75MM)	1	1	1.3L 411	Y
	11	11024-30000	PLUG-CHAIN TENSIONER OIL FEED(BRASS)	1		1.3L 411	
	12	11019-32200	PLUG-TAPER(44.425)	1	10	1.3L 411	
*	13	00915-21800	WASHER-LOCK TO FIX BEARING CAP	6	50	1.3L 411	
	14	00134-86500	BOLT TO FIX BEARING CAP	6	25	1.3L 411	
*	15	11021-30000	PLUG-CRANK CASE OIL GALLERY(BRASS)	5	50	1.3L 411	
	16	11021-13200	PLUG-CRANK CASE OIL GALLERY	4		1.3L 411	Y
	17	11022-30000	PLUG-TAPER,CRANK CASE OIL HOLE(BRASS)	2	20	1.3L 411	

Printed in Japan

REVISED: SEPTEMBER,1968

S	KEY NO.	PART NO.	PART NAME	Q'TY	SALES UNIT	MODEL	ICA
	18	11056-30000	STUD-CYLINDER HEAD(LONG)	4	10	1.3L 411	
	19	11057-30000	STUD-CYLINDER HEAD(SHORT)	6	10	1.3L 411	
	20	11055-10600	STUD-CYLINDER HEAD(MIDDLE)	1		1.3L 411	
	21	15067-10600	STUD-OIL PUMP	1	10	1.3L 411	
	22	00253-62510	STUD(TO FIX FUEL PUMP TO CRANK CASE)	2		1.3L 411	
	23	00314-62810	STUD(TO FIX OIL FILTER)	1		1.3L 411	
	24	11026-61000	WASHER-COPPER,PLUG	2	10	1.3L 411	
	25	12231-13200	BEARING-CRANK SHAFT,HALF(STANDARD SIZE)	6	1	1.3L411	
	26	12233-13200	BEARING-CRANK SHAFT,HALF(0.25MM UNDER SIZE)	6	1	1.3L 411	
	27	12234-13200	BEARING-CRANK SHAFT,HALF(0.50MM UNDER SIZE)	6	1	1.3L 411	
	28	12235-13200	BEARING-CRANK SHAFT,HALF(0.75MM UNDER SIZE)	6	1	1.3L 411	
	29	12236-13200	BEARING-CRANK SHAFT,HALF(1.00MM UNDER SIZE)	6	1	1.3L 411	
	30	12231-16700	BUSHING-MAIN BEARING	6		OP.UTK 411	
	31	12323-13200	WASHER-THRUST,BI-METAL (UPPER)	2	1	1.3L 411	
*	32	12280-30800	WASHER-THRUST,BI-METAL (UPPER)	2	10	1.3L 411	
	33	12280-13200	WASHER-THRUST,BI-METAL (UPPER)	2	50	1.3L 411	Y
*	34	12318-30800	WASHER-THRUST,BI-METAL (UPPER)	2	10	1.3L 411	
	35	12318-13200	WASHER-THRUST,BI-METAL (UPPER)	2	10	1.3L 411	Y

Printed in Japan

REVISED: SEPTEMBER,1968

S	KEY NO.	PART NO.	PART NAME	Q'TY	SALES UNIT	MODEL	ICA
	36	12319-30800	WASHER-THRUST,BI-METAL (UPPER)	2	10	1.3L 411	
	37	12319-13200	WASHER-THRUST,BI-METAL (UPPER)	2	10	1.3L 411	Y
	38	12322-13200	WASHER-THRUST,BI-METAL (LOWER)	2	10	1.3L 411	
*	39	12281-30800	WASHER-THRUST,BI-METAL (LOWER)	2	10	1.3L 411	
	40	12281-13200	WASHER-THRUST,BI-METAL (LOWER)	2		1.3L 411	Y
*	41	12320-30800	WASHER-THRUST,BI-METAL (LOWER)	2		1.3L 411	
	42	12320-13200	WASHER-THRUST,BI-METAL (LOWER)	2	10	1.3L 411	Y
*	43	12321-30800	WASHER-THRUST,BI-METAL (LOWER)	2		1.3L 411	
	44	12321-13200	WASHER-THRUST,BI-METAL (LOWER)	2	10	1.3L 411	Y
	45	12279-09400	SEAL-OIL,CRANK CASE	2	10	1.3L 411	
	46	12287-09400	SEAL-OIL,FRONT BEARING CAP	1		1.3L 411	
	47	12289-09400	SEAL-OIL,REAR BEARING SIDE	2	5	1.3L 411	
	48	30410-08000	PLATE-GEAR BOX MOUNTIN G	1		1.3L 411	
	49	30412-30000	DOWEL-GEAR BOX MOUNTIN G PLATE	2	5	1.3L 411	
	50	00124-62010	SCREW-SET TO FIX GEAR BOX MOUNTING PLATE TO CRANK CASE	8	50	1.3L 411	
	51	30526-30000	WASHER-LOCK TO FIX GEA R BOX MOUNTING PLATE T O CRANK CASE	1	50	1.3L 411	
	52	30527-30000	WASHER-LOCK TO FIX GEA R BOX MOUNTING PLATE	1	50	1.3L 411	

Printed in Japan

REVISED: SEPTEMBER,1968

S	KEY NO.	PART NO.	PART NAME	Q'TY	SALES UNIT	MODEL	ICA
	53	30528-30000	WASHER-LOCK TO FIX GEA R BOX MOUNTING PLATE	2	50	1.3L 411	
*	54	00915-11600	WASHER-SPRING TO FIX G EAR BOX MOUNTING PLATE	8	50	1.3L 411	N
	55	00114-52010	SCREW-SET TO FIX GEAR BOX MOUNTING PLATE	4		1.3L 411	
	56	30529-30000	WASHER-LOCK TO FIX GEA R BOX MOUNTING PLATE	1		1.3L 411	
	57	30545-30000	WASHER-LOCK TO FIX GEA R BOX MOUNTING PLATE	1	50	1.3L 411	
*	58	00915-11500	WASHER-SPRING TO FIX G EAR BOX MOUNTING PLATE	4	50	1.3L 411	N
	59	13034-08700	PLATE-ENGINE MOUNTING, FRONT	1	1	1.3L 411	
	60	13037-01300	GASKET(FRONT MOUNTING PLATE TO CYLINDER BLOC K)	1	10	1.3L 411	
	61	00114-52010	SCREW-SET TO FIX FRONT ENGINE MOUNTING PLATE TO CYLINDER BLOCK	3		1.3L 411	
*	62	00915-21500	WASHER-LOCK TO FIX FRO NT ENGINE MOUNTING PLA TE TO CYLINDER BLOCK	3	50	1.3L 411	
	63	13035-10600	ASSY-COVER,TIMING CHAI N CASE	1	1	1.3L 411	
	64	13042-30000	FELT-RING,CRANK CASE F RONT COVER	1	10	1.3L 411	
	65	13044-08000	GASKET-TIMING CHAIN CA SE COVER	1	10	1.3L 411	
	66	32114-30000	BOLT TO FIX CHAIN CASE COVER TO MOUNTING PLA TE	1		1.3L 411	
	67	00114-41010	BOLT TO FIX CHAIN CASE COVER TO MOUNTING PLA TE	2		1.3L 411	

Printed in Japan

REVISED: SEPTEMBER,1968

S	KEY NO.	PART NO.	PART NAME	Q'TY	SALES UNIT	MODEL	ICA
	68	13047-30000	WASHER-SPECIAL TO FIX CHAIN CASE COVER TO MOUNTING PLATE	3	50	1.3L 411	
*	69	00915-11400	WASHER-LOCK TO FIX CHAIN CASE COVER TO MOUNTING PLATE	3	50	1.3L 411	
	70	00253-41810	STUD TO FIX FRONT PLATE&COVER TO CYLINDER BLOCK	2		1.3L 411	
	71	00911-14410	NUT TO FIX FRONT PLATE&COVER TO CYLINDER BLOCK	2		1.3L 411	
	72	00915-11410	WASHER-LOCK TO FIX FRONT PLATE&COVER TO CYLINDER BLOCK	2		1.3L 411	
	73	13047-30000	WASHER-SPECIAL TO FIX FRONT PLATE&COVER TO CYLINDER BLOCK	2	50	1.3L 411	
	74	00114-52010	SCREW TO FIX FRONT PLATE&COVER TO CYLINDER BLOCK	4		1.3L 411	
	75	11122-01300	WASHER-PLAIN TO FIX FRONT PLATE&COVER TO CYLINDER BLOCK	1	10	1.3L 411	
	76	13048-30000	WASHER-SPECIAL TO FIX FRONT PLATE&COVER TO CYLINDER BLOCK	3	50	1.3L 411	
*	77	00915-11500	WASHER-LOCK TO FIX FRONT PLATE&COVER TO CYLINDER BLOCK	4	50	1.3L 411	
	78	11027-09401	ASSY-COVER,SIDE,CYLINDER BLOCK(FRONT)(NOT USED FROM 66-OCT.)	1	5	1.3L 411	
	79	11029-09400	ASSY-COVER,SIDE,CYLINDER BLOCK(REAR)(TO SEP-66)	1	10	1.3L 411 EXC.U.S.A.	
	80	11029-09400	ASSY-COVER SIDE,CYLINDER BLOCK(FRONT&REAR)(TO SEP-66)	2	10	1.3L 411 U.S.A.	

Printed in Japan

REVISED: SEPTEMBER,1968

S	KEY NO.	PART NO.	PART NAME	Q'TY	SALES UNIT	MODEL	ICA
	81	11029-09400	ASSY-COVER SIDE,CYLINDER BLOCK,FRONT & REAR(FROM OCT-66)	2	10	1.3L 411	
	82	11033-09400	GASKET-CYLINDER BLOCK SIDE COVER	2	20	1.3L 411	
	83	00114-54510	SCREW TO FIX CYLINDER BLOCK SIDE COVER	2		1.3L 411	
	84	11035-30000	WASHER TO FIX CYLINDER BLOCK SIDE COVER	2	10	1.3L 411	
	85	15262-10600	ASSY-TUBE,BREATHER(NOT USED FROM 66-OCT.)	1	10	1.3L 411	
	86	25241-30000	ADAPTER-OIL PRESSURE SWITCH	1	5	1.3L 411	
	87	15146-10600	GUIDE-OIL LEVEL GAUGE(TO SEP-66)	1	5	1.3L 411	
	88	15146-10601	GUIDE-OIL LEVEL GAUGE(FROM 66-OCT.)	1		1.3L 411	Y
	89	15140-10600	ASSY-GAUGE,OIL LEVEL(TO SEP-66)	1	10	1.3L 411	
	90	15140-10601	ASSY-GAUGE,OIL LEVEL(FROM 66-OCT.)	1	5	1.3L 411	Y
	91	21211-12601	COCK-DRAIN	1	5	1.3L 411	
	92	11012-13200	LINER-CYLINDER(4.00MM OVER SIZE)	4	4	1.3L 411	
	93	11013-13200	LINER-CYLINDER(4.50MM OVER SIZE)	4	4	1.3L 411	
	94	11014-13200	LINER-CYLINDER(5.00 MM OVER SIZE)	4	4	1.3L 411	
	95	11110-10600	ASSY-PAN,OIL(2.9L)	1		1.3L 411	
	96	11110-16700	ASSY-PAN,OIL	1	1	OP.UTK 411	
	97	11128-61801	PLUG-DRAIN	1	50	1.3L 411	
	98	11121-10600	GASKET-OIL PAN	1	10	1.3L 411	
	99	11125-30000	SCREW(TO FIX OIL PAN)	19		1.3L 411	

Printed in Japan

REVISED: SEPTEMBER,1968

S	KEY NO.	PART NO.	PART NAME	Q'TY	SALES UNIT	MODEL	ICA
	100	11026-61000	WASHER-COPPER,PLUG	1	10	1.3L 411	

Printed in Japan

REVISED: SEPTEMBER,1968

NOTE

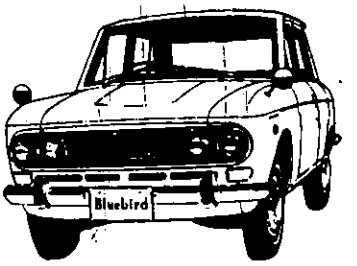

CYLINDER BLOCK (1.6 L)

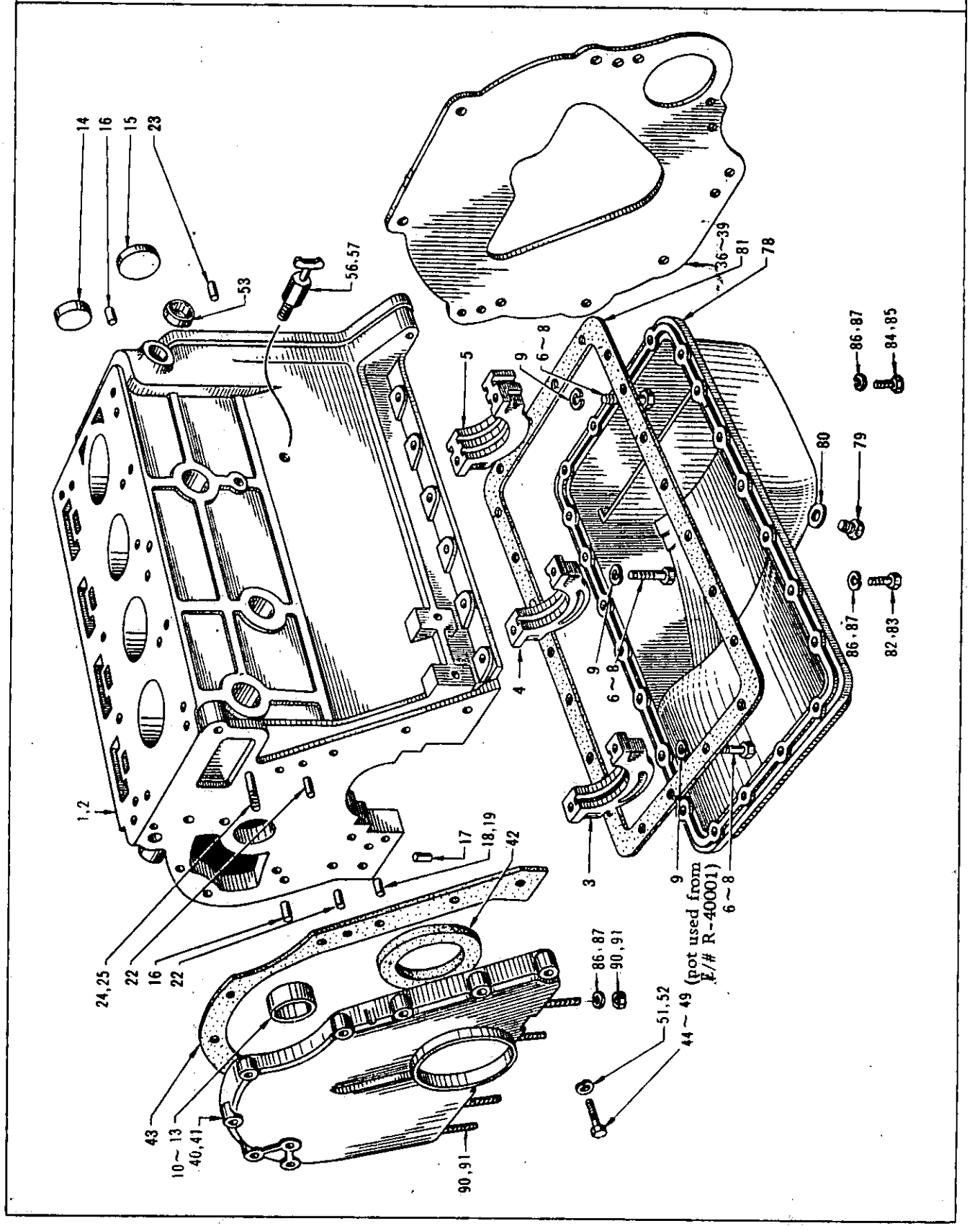

CYLINDER BLOCK (1.6 L)

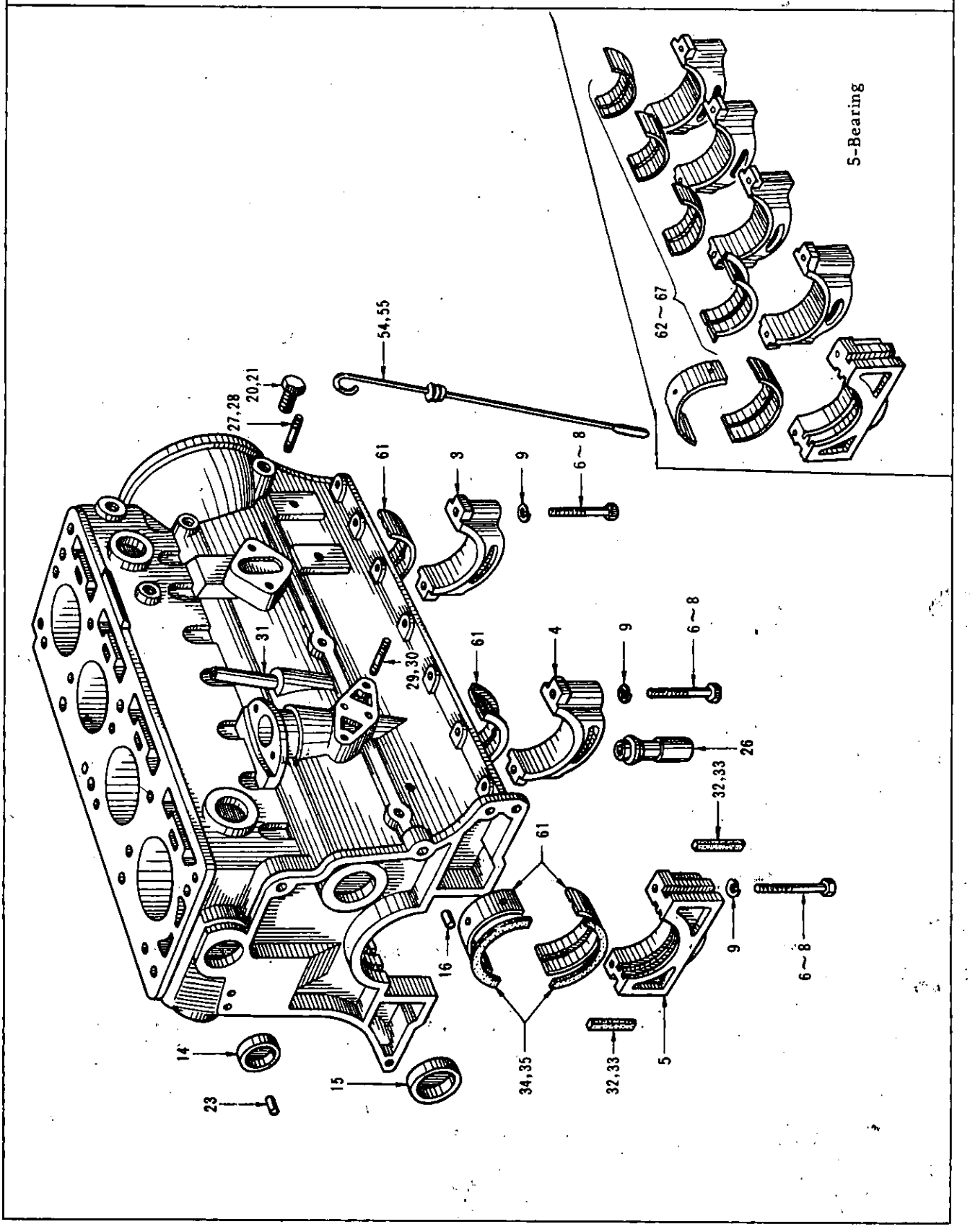

S	KEY NO.	PART NO.	PART NAME	QTY	SALES UNIT	MODEL	ICA
			CYLINDER BLOCK (1.6 L)				
	1	11010-15801	ASSY-BLOCK,CYLINDER(TO E/# R-40000)	1	1	1.6L 411	
	2	11010-74700	ASSY-BLOCK,CYLINDER(FROM E/# R-40001)	1	1	1.6L 411	N
*	3	NOT - SALE	CAP-BEARING,CRANK SHAFT,FRONT	1		1.6L 411	
*	4	NOT - SALE	CAP-BEARING,CRANK SHAFT,MIDDLE	1		1.6L 411	
*	5	NOT - SALE	CAP-BEARING,CRANK SHAFT,REAR	1		1.6L 411	
	6	00131-88000	BOLT(TO E/# R-40000)	6	50	1.6L 411	
	7	12294-78200	BOLT(FROM E/# R-40001) FIXING BEARING CAP	6		1.6L 411	N
	8	12295-78200	BOLT(FROM E/# R-40001) FIXING BEARING CAP	4	10	1.6L 411	
*	9	00915-21800	WASHER-LOCK(NOT USED FROM E/# R-40001)FIXING BEARING CAP	6	50	1.6L 411	
	10	13002-71204	SET-BUSHING,CAMSHAFT(STANDARD SIZE)	1	1	1.6L 411	
	11	13002-71205	SET-BUSHING,CAMSHAFT(U/S 0.25MM)	1	1	1.6L 411	
	12	13002-71206	SET-BUSHING,CAMSHAFT(U/S 0.50MM)	1	1	1.6L 411	
	13	13002-71207	SET-BUSHING,CAMSHAFT(U/S 0.75MM)	1	1	1.6L 411	
	14	00933-13500	PLUG-TAPER 35	6	50	1.6L 411	
	15	11019-32200	PLUG-TAPER 44.425	1	10	1.6L 411	
*	16	11021-30000	PLUG-OIL GALLERY,CRANK CASE(BRASS)	2	50	1.6L 411	

Printed in Japan

REVISED: SEPTEMBER,1968

S	KEY NO.	PART NO.	PART NAME	Q'TY	SALES UNIT	MODEL	ICA
	17	11024-03200	PLUG-BLIND 6.5	1	10	1.6L 411	
	18	13081-32201	JET-OIL,CHAIN TENSIONER(TO E/# R-40000)	1	10	1.6L 411	
	19	13081-78200	JET-OIL,CHAIN TENSIONER(FROM E/# R-40001)	1	10	1.6L 411	N
	20	00931-30210	PLUG(FOR OIL GALLERY)(TO E/# R-40000)	2	50	1.6L 411	
	21	08931-30210	PLUG(FOR OIL GALLERY)(FROM E/# R-40001)	2	50	1.6L 411	N
*	22	11023-32200	DOWEL-TIMING CHAIN CASE	2	10	1.6L 411	
	23	30412-85060	DOWEL	2	1	1.6L 411	
	24	00214-65010	STUD-WATER PUMP(TO E/# R-40000)	1	25	1.6L 411	
	25	08227-04510	STUD-WATER PUMP(FROM E/# R-40001)	1		1.6L 411	N
	26	15042-32200	BUSHING-DRIVING SPINDLE,OIL PUMP	1	10	1.6L 411	
	27	00214-52510	STUD-FUEL PUMP(TO E/# R-40000)	2	100	1.6L 411	
	28	08223-82510	STUD-FUEL PUMP(FROM E/# R-40001)	2	50	1.6L 411	N
	29	00214-62210	STUD-OIL FILTER(TO E/# R-40000)	2	50	1.6L 411	
	30	08227-02210	STUD-OIL FILTER(FROM E/# R-40001)	2	50	1.6L 411	N
	31	15146-12200	GUIDE-OIL LEVEL GAUGE	1	5	1.6L 411	
*	32	12289-32201	SEAL-OIL,REAR SPRING CAP SIDE	2	10	1.6L 411	
	33	12289-14600	SEAL-OIL,REAR SPRING CAP SIDE	2	10	1.6L 411	Y
	34	12279-32200	SEAL-OIL,CRANK SHAFT(TO E/# R-40000)	2		1.6L 411	

Printed in Japan

REVISED: SEPTEMBER,1968

S	KEY NO.	PART NO.	PART NAME	Q'TY	SALES UNIT	MODEL	ICA
	35	12279-61000	SEAL-OIL,CRANK SHAFT(FROM E/# R-40001)	2	1	1.6L 411	N
	36	30411-38701	PLATE-REAR,ENGINE(TO E/# R-40000)	1		RL-UTK,WRL-UTK 411	
*	37	30411-78200	PLATE-REAR,ENGINE(FROM E/# R-40001)	1	1	RL-UTK,WRL-UTK 411	N
	38	30411-71801	PLATE-REAR,ENGINE(TO E/# R-40000)	1	1	RL-UAK,WRL-UAK 411	
	39	30411-78201	PLATE-REAR,ENGINE(FROM E/# R-40001)	1		RL-UAK,WRL-UAK 411	N
	40	13036-61050	COVER-TIMING CHAIN,WITH SEAL(TO E/# R-40000)	1	1	1.6L 411	
	41	13500-66600	COVER-TIMING CHAIN,WITH SEAL(FROM E/# R-40001)	1		1.6L 411	N
	42	78200 13042-32200	SEAL-OIL,TIMING CHAIN COVER	1	5	1.6L 411	
	43	~~78200~~ 13044-32200	GASKET-TIMING CHAIN COVER	1	10	1.6L 411	
	44	00111-41010	BOLT(TO E/# R-40000)FIXING TIMING CHAIN COVER	5	50	1.6L 411	
*	45	08120-84500	BOLT(FROM E/# R-40001) FIXING TIMING CHAIN COVER	5		1.6L 411	N
	46	00111-41010	BOLT(TO E/# R-40000)FIXING TIMING CHAIN COVER	2	50	1.6L 411	
	47	08121-84010	BOLT(FROM E/# R-40001) FIXING TIMING CHAIN COVER	2		1.6L 411	N
	48	00111-41010	BOLT(TO E/# R-40000)FIXING TIMING CHAIN COVER	2	50	1.6L 411	
	49	13541-66600	BOLT(FROM E/# R-40001) FIXING TIMING CHAIN COVER	2	10	1.6L 411	N

Printed in Japan

REVISED: SEPTEMBER,1968

S	KEY NO.	PART NO.	PART NAME	Q'TY	SALES UNIT	MODEL	ICA
	50	00111-41010	BOLT(TO E/# R-40000)FIXING TIMING CHAIN COVER	2	50	1.6L 411	
	51	00915-11410	WASHER-SPRING(TO E/# R-40000) FIXING TIMING CHAIN COVER	9		1.6L 411	
*	52	08915-13800	WASHER-SPRING(FROM E/# R-40001)	9	50	1.6L 411	N
	53	00933-13000	PLUG-TAPER 30	1	25	1.6L 411	
	54	15140-15800	ASSY-GAUGE,OIL LEVEL(TO SEP-66)	1	1	1.6L 411	
	55	15140-12201	ASSY-GAUGE,OIL LEVEL(FROM 66-OCT.)	1		1.6L 411	Y
	56	21211-12601	COCK-DRAIN(TO E/# R-40000)	1	5	1.6L 411	
	57	21211-18000	COCK-DRAIN(FROM E/# R-40001)	1	5	1.6L 411	N
	58	11012-14600	LINER-CYLINDER(OVER SIZE 4.00 MM)	1	4	1.6L 411	
	59	11013-14600	LINER-CYLINDER(OVER SIZE 4.50 MM)	1	4	1.6L 411	
	60	11014-14600	LINER-CYLINDER(OVER SIZE 5.00 MM)	1	4	1.6L 411	
*	61	12207-73600	SET-BEARING,CRANK SHAFT F770(STD)3-BEARING(TO E/# R-40000)	1	1	1.6L 411	
	62	12207-78400	SET-BEARING,CRANK SHAFT F770(STD)5-BEARING(FROM E/# R-40001)	1		1.6L 411	N
*	63	12208-73600	SET-BEARING,CRANK SHAFT F770(U/S 0.02 MM)3-BEARING R-40001)	1	1	1.6L 411	
*	64	12209-73600	SET-BEARING,CRANK SHAFT F770(U/S 0.25 MM)3-BEARING R-40001)	1	1	1.6L 411	

REVISED: SEPTEMBER,1968

Printed in Japan

S	KEY NO.	PART NO.	PART NAME	Q'TY	SALES UNIT	MODEL	ICA
*	65	12210-73600	SET-BEARING,CRANK SHAFT F770(U/S 0.50 MM)3-BEARING R-40001)	1	1	1.6L 411	
*	66	12211-73600	SET-BEARING,CRANK SHAFT F770(U/S 0.75 MM)3-BEARING R-40001)	1	1	1.6L 411	
*	67	12212-73600	SET-BEARING,CRANK SHAFT F770(U/S 1.00 MM)3-BEARING R-40001)	1	1	1.6L 411	
	68	11115-24500	BRACKET-HOSE FOR TC.COOLER R.H.	1		RL-UAK,WRL-UAK 411	
	69	11116-24500	BRACKET-HOSE FOR TC.COOLER L.H.	1	10	RL-UAK,WRL-UAK 411	
	70	11117-24500	CLAMP-TUBE OIL COOLER FOR A/T	2	1	RL-UAK,WRL-UAK 411	
	71	12314-30000	WASHER-LOCK	3	50	RL-UAK,WRL-UAK 411	
	72	12330-62800	ADAPTER-DRIVE PLATE(TO E/# R-40000)	1	1	RL-UAK,WRL-UAK 411	
*	73	12330-78200	ADAPTER-DRIVE PLATE(FROM E/# R-40001)	1		RL-UAK,WRL-UAK 411	N
	74	12331-62800	ASSY-PLATE&GEAR,DRIVE(TO E/# R-40000)	1		RL-UAK,WRL-UAK 411	
*	75	12331-78200	ASSY-PLATE&GEAR,DRIVE(FROM E/# R-40001)	1	1	RL-UAK,WRL-UAK 411	N
	76	12333-62800	REINFORCE-DRIVE PLATE(TO E/# R-40000)	1	1	RL-UAK,WRL-UAK 411	
	77	12333-78200	REINFORCE-DRIVE PLATE(FROM E/# R-40001)	1	1	RL-UAK,WRL-UAK 411	N
	78	11110-15800	ASSY-OIL PAN(3.3L)(FROM 66-OCT.)	1	1	1.6L 411	
	79	11128-61001	PLUG-DRAIN	1	50	1.6L 411	
	80	11026-61000	WASHER-DRAIN PLUG	1	10	1.6L 411	
	81	11121-12210	GASKET-OIL PAN(FROM 66-OCT.)	1	10	1.6L 411	

Printed in Japan

REVISED: SEPTEMBER,1968

S	KEY NO.	PART NO.	PART NAME	Q'TY	SALES UNIT	MODEL	ICA
	82	00131-41810	BOLT-HEX.1/4-20(TO E/# R-40000)	16		1.6L 411	
	83	08130-61810	BOLT-HEX.M6 X 1.0(FROM E/# R-40001)	16	50	1.6L 411	N
	84	00131-42210	BOLT-HEX.1/4-20(TO E/# R-40000)	2		1.6L 411	
	85	08130-62210	BOLT-HEX. M6 X 1.0(FROM E/# R-40001)	2		1.6L 411	N
	86	00915-11410	WASHER-SPRING 1/4(TO E/# R-40000)	22		1.6L 411	
	87	08915-13610	WASHER-SPRING M6(FROM E/# R-40001)	22	25	1.6L 411	N
	88	00224-41610	STUD-FIXING OIL PAN(TO E/# R-40000)	4		1.6L 411	
	89	08226-61610	STUD-FIXING OIL PAN(FROM E/# R-40001)	4	50	1.6L 411	N
	90	00911-24410	NUT-HEX.1/4-28 UNF(TO E/# R-40000)	4		1.6L 411	
	91	08911-10610	NUT-HEX.M6(FROM E/# R-40001)	4	50	1.6L 411	N

Printed in Japan

REVISED: SEPTEMBER,1968

NOTE

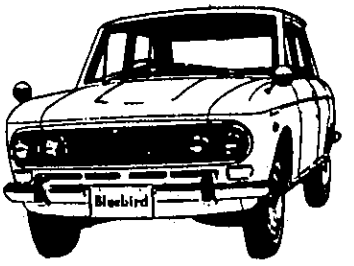

NOTE

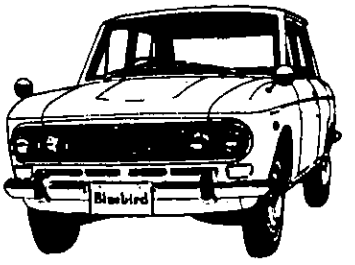

PISTON & CRANK SHAFT

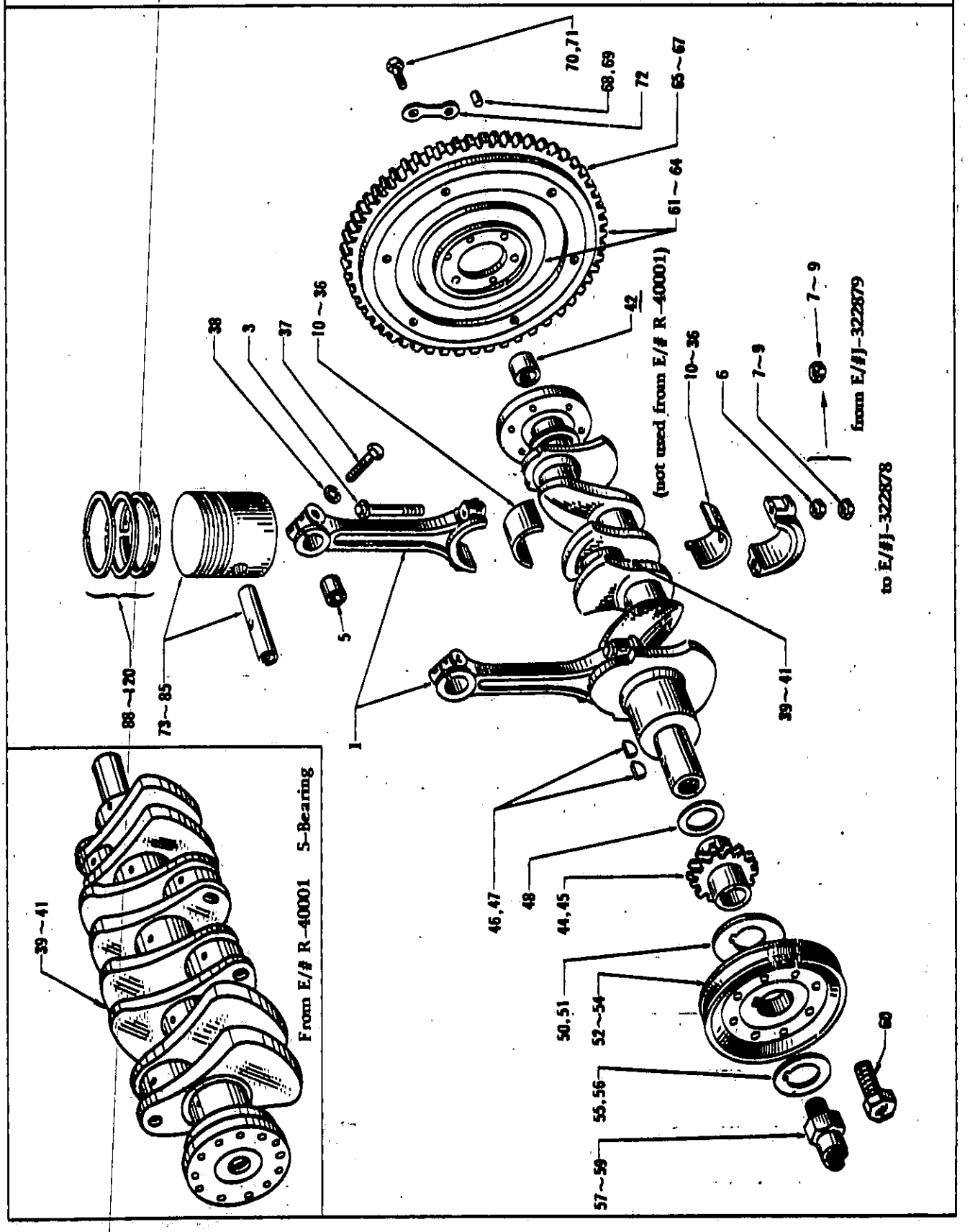

PISTON & CRANK SHAFT

S	KEY NO.	PART NO.	PART NAME	Q'TY	SALES UNIT	MODEL	ICA
	1	12100-09400	ASSY-ROD,CONNECTING	4	1	1.3L411	
	2	12100-14650	ASSY-ROD,CONNECTING	4	1	1.6L411	
	3	12109-04400	BOLT-CONNECTING ROD	8		1.3L411	
	4	12109-14600	BOLT-CONNECTING ROD	8	10	1.6L411	
	5	12030-32200	BUSHING-CONNECTING ROD SMALL END	4	8	1.6L411	
	6	00911-24610	NUT FOR CONNECTING ROD BOLT	8		411	
	7	12112-02700	NUT-PAL FOR CONNECTING ROD BOLT	8	50	1.3L411	
	8	12112-13200	NUT-HEX.(FROM E/#J-322 879)	8	50	1.3L411	Y
	9	12112-58000	NUT-PAL FOR CONNECTING ROD BOLT	8	50	1.6L411	
	10	12111-09405	BUSHING-CONNECTING ROD (STANDARD SIZE,F500)	8	8	1.3L411(EX C.UTK)	
	11	12111-16700	BUSHING-CONNECTING ROD (STANDARD SIZE,F770)	8	1	UTK 411	
	12	12111-12210	BUSHING-CONNECTING ROD (STANDARD SIZE,F770)	8	4	1.6L411	
	13	12121-09405	BUSHING-CONNECTING ROD ,UPPER UNDER SIZE 0.08 MM	4	4	1.3L411(EX C.UTK)	
	14	12121-09402	BUSHING-CONNECTING ROD ,LOWER UNDER SIZE 0.08 MM	4	8	1.3L411(EX C.UTK)	
	15	12121-16700	BUSHING-CONNECTING ROD (UNDER SIZE 0.08 MM)	8	10	UTK 411	
	16	12121-12210	BUSHING-CONNECTING ROD (UNDER SIZE 0.06 MM F7 70)	8	4	1.6L411	

Printed in Japan

REVISED: SEPTEMBER,1968

S	KEY NO.	PART NO.	PART NAME	Q'TY	SALES UNIT	MODEL	ICA
	17	12122-09405	BUSHING-CONNECTING ROD ,UPPER UNDER SIZE 0.12 MM	4	4	1.3L411(EX C.UTK)	
*	18	12122-09402	BUSHING-CONNECTING ROD ,LOWER UNDER SIZE 0.12 MM	4	8	1.3L411(EX C.UTK)	
	19	12122-16700	BUSHING-CONNECTING ROD (UNDER SIZE 0.12 MM)	8	10	UTK 411	
	20	12122-12210	BUSHING-CONNECTING ROD (UNDER SIZE 0.12 MM F7 70)	8	4	1.6L411	
	21	12117-09405	BUSHING-CONNECTING ROD ,UPPER UNDER SIZE 0.25 MM	4		1.3L411(EX C.UTK)	
*	22	12117-09402	BUSHING-CONNECTING ROD ,LOWER UNDER SIZE 0.25 MM	4		1.3L 411(E XC. UTK)	
	23	12117-16700	BUSHING-CONNECTING ROD (UNDER SIZE 0.25 MM)	8	10	UTK 411	
	24	12117-12210	BUSHING-CONNECTING ROD (UNDER SIZE 0.25 MM F7 70)	8	4	1.6L411	
	25	12118-09405	BUSHING-CONNECTING ROD , UPPER UNDER SIZE 0.5 0 MM	4		1.3L411(EX C.UTK)	
*	26	12118-09402	BUSHING-CONNECTING ROD ,LOWER UNDER SIZE 0.50 MM	4		1.3L411(EX C.UTK)	
	27	12118-16700	BUSHING-CONNECTING ROD (UNDER SIZE 0.50 MM)	8	10	UTK 411	
	28	12118-12210	BUSHING-CONNECTING ROD (UNDER SIZE 0.50 MM F7 70)	8	4	1.6L411	
	29	12119-09405	BUSHING-CONNECTING ROD ,UPPER UNDER SIZE 0.75 MM	4	8	1.3L411(EX C.UTK)	
*	30	12119-09402	BUSHING-CONNECTING ROD ,LOWER UNDER SIZE 0.75 MM	4	4	1.3L411(EX C.UTK)	

REVISED: SEPTEMBER,1968

Printed in Japan

S	KEY NO.	PART NO.	PART NAME	QTY	SALES UNIT	MODEL	ICA
	31	12119-16700	BUSHING-CONNECTING ROD (UNDER SIZE 0.75 MM)	8	10	UTK 411	
	32	12119-12210	BUSHING-CONNECTING ROD (UNDER SIZE 0.75 MM F7 70)	8	4	1.6L411	
	33	12120-09405	BUSHING-CONNECTING ROD ,UPPER UNDER SIZE 1.00 MM	4		1.3L411(EX C.UTK)	
*	34	12120-09402	BUSHING-CONNECTING ROD ,LOWER UNDER SIZE 1.00 MM	4		1.3L411(EX C.UTK)	
	35	12120-16700	BUSHING-CONNECTING ROD (UNDER SIZE 1.00 MM)	8	10	UTK 411	
	36	12120-12210	BUSHING-CONNECTING ROD (UNDER SIZE 1.00 MM F7 70)	8	4	1.6L411	
	37	00134-52800	BOLT FOR CONNECTING RO D	4	50	1.3L411	
*	38	00915-21500	WASHER-LOCK FOR CONNEC TING ROD	4	50	1.3L411	
	39	12200-13200	COMP.-CRANK SHAFT	1		1.3L411	
*	40	12200-14600	COMP.-CRANK SHAFT(TO E /# R-40000)	1	1	1.6L411	
	41	12200-74710	COMP.-CRANK SHAFT(FROM E/#R-40001)	1	1	1.6L411	N
	42	32202-30000	BUSHING-LST MOTION SHA FT(NOT USED FROM E/# R -40001)	1		411	
	43	32202-09500	BEARING-NEEDLE,PILOT	1	1	411	
	44	13021-30000	GEAR-CRANK SHAFT	1	1	1.3L411	
	45	13021-32200	GEAR-CRANK SHAFT	1	1	1.6L411	
	46	12316-30000	KEY-CRANK SHAFT	2	10	1.3L411	
	47	00926-51600	KEY-WOODRUFF	2	50	1.6L411	
	48	12301-30000	WASHER-PACKING,CRANK S HAFT GEAR	AR	1	1.3L411	

Printed in Japan

REVISED: SEPTEMBER,1968

S	KEY NO.	PART NO.	PART NAME	Q'TY	SALES UNIT	MODEL	ICA
	49	12299-32200	SHIM-CRANK GEAR	AR	50	1.6L411	
	50	12302-30000	THROWER-OIL,CRANK SHAFT,FRONT	1	50	1.3L411	
	51	12302-32200	THROWER-OIL,CRANK SHAFT	1	10	1.6L411	
	52	12303-10600	PULLEY-CRANK SHAFT .	1	1	1.3L411	
	53	12303-16700	PULLEY-CRANK SHAFT	1	1	OP.UTK 411	
	54	12303-15800	PULLEY-CRANK SHAFT(FROM 66-OCT.)	1		1.6L411	
	55	12308-10600	WASHER-LOCK,STARTING NUT(FROM 66-OCT.)	1	50	1.3L411	
	56	12308-65000	WASHER-LOCK,STARTING NUT(FROM 66-OCT.)	1	10	1.6L411	
	57	12309-30800	NUT-STARTING	1	10	411FINLAND	
	58	12309-71200	NUT-STARTING(TO E/# R-40000)	1	5	1.6L 411	
	59	12309-78200	NUT-STARTING(FROM E/# R-40001)	1		1.6L 411	N
	60	12309-16500	BOLT-CRANK PULLEY	1	10	1.3L(EXC.FINLAND)	
	61	12310-10601	ASSY-FLYWHEEL(F & S CLUTCH)	1	1	1.3L(EXC.UTK)	
	62	12310-16700	ASSY-FLYWHEEL	1	1	UTK 411	
	63	12310-14600	ASSY-FLYWHEEL(TO E/# R-40000)	1	1	1.6L 411	
	64	12310-18810	ASSY-FLYWHEEL(FROM E/# R-40001)	1	1	1.6L 411	N
	65	12312-09600	GEAR-RING,FLYWHEEL	1		1.3L 411	
	66	12312-61000	GEAR-RING,FLYWHEEL	1	1	1.6L 411	
	67	12312-62800	GEAR-RING,FLYWHEEL(FROM 66-OCT.)	1		1.6L 411	
	68	12313-30000	DOWEL-CLUTCH TO FLYWHEEL(TO SEP-65)	1	10	411	

Printed in Japan

REVISED: SEPTEMBER,1968

S	KEY. NO.	PART NO.	PART NAME	QTY	SALES UNIT	MODEL	ICA
	69	12313-10600	DOWEL-CLUTCH TO FLYWHEEL(FROM OCT.-65)	1	10	411	Y
*	70	00134-62200	BOLT TO FIX FLYWHEEL TO CRANK SHAFT	6	25	1.3L 411	
	71	00134-62510	BOLT TO FIX FLYWHEEL TO CRANK SHAFT	6		1.6L 411	N
	72	12314-30000	WASHER-LOCK TO FIX FLYWHEEL TO CRANK SHAFT	3	50	411	
	73	12010-13201	SET-PISTON & PISTON PIN(STANDARD SIZE)	4		1.3L 411	
	74	12010-14611	SET-PISTON & PISTON PIN(STANDARD SIZE)	4		1.6L 411	
	75	12010-13202	SET-PISTON & PISTON PIN(0.25MM OVERSIZE)	4		1.3L 411	
	76	12010-14613	SET-PISTON & PISTON PIN(0.25MM OVER SIZE)	4		1.6L411	
	77	12010-13203	SET-PISTON & PISTON PIN(0.50MM OVER SIZE)	4		1.3L411	
	78	12010-14614	SET-PISTON & PISTON PIN(0.50MM OVER SIZE)	4		1.6L411	
	79	12010-13204	SET-PISTON & PISTON PIN(0.75MM OVER SIZE)	4		1.3L411	
	80	12010-14615	SET-PISTON & PISTON PIN(0.75MM OVER SIZE)	4		1.6L411	
	81	12010-13205	SET-PISTON & PISTON PIN(1.00MM OVER SIZE)	4		1.3L411	
	82	12010-14616	SET-PISTON & PISTON PIN(1.00MM OVER SIZE)	4		1.6L411	
	83	12010-13206	SET-PISTON & PISTON PIN(1.25MM OVER SIZE)	4		1.3L411	
	84	12010-13207	SET-PISTON & PISTON PIN(1.50MM OVER SIZE)	4		1.3L411	
	85	12010-14618	SET-PISTON & PISTON PIN(1.50MM OVER SIZE)	4		1.6L411	
*	86	NOT - SALE	PIN-PISTON	4		1.3L411	

Printed in Japan

REVISED: SEPTEMBER,1968

S	KEY NO.	PART NO.	PART NAME	Q'TY	SALES UNIT	MODEL	ICA
	87	00922-22200	RING-SNAP,PISTON PIN	8	50	1.6L 411	
*	88	12033-13900	SET-RING,PISTON(STANDARD SIZE) R-40001)	1	1	1.3L411	
*	89	12033-13901	SET-RING,PISTON(STNADRD SIZE,RIK-VENT)7KG/CM2	1		1.3L411	
	90	12033-19100	SET-RING,PISTON(STANDARD SIZE,RIK-VENT)12KG/CM2	1		1.3L411	
	91	12033-14600	SET-RING,PISTON(STANDARD SIZE)	1		1.6L411	
	92	12033-14601	SET-RING,PISTON(STANDARD SIZE,RIK-VENT)	1	1	1.6L411	
*	93	12034-13900	SET-RING,PISTON(0.25MM OVER SIZE)	1	1	1.3L411	
*	94	12034-13901	SET-RING,PISTON(0.25MM OVER SIZE,RIK-VENT)7KG/CM2	1	1	1.3L411	
	95	12034-19100	SET-RING,PISTON(0.25MM OVER SIZE,RIK-VENT)12KG/CM2	1		1.6L411	
	96	12035-14600	SET-RING,PISTON(0.25MM OVER SIZE)	1		1.6L411	
	97	12035-14601	SET-RING,PISTON(0.25MM OVER SIZE,RIK-VENT)	1	1	1.6L411	
*	98	12035-13900	SET-RING,PISTON(0.50MM OVER SIZE)	1	1	1.3L411	
*	99	12035-13901	SET-RING,PISTON(0.50MM OVER SIZE,RIK-VENT)7KG/CM2	1		1.3L411	
	100	12035-19100	SET-RING,PISTON(0.50MM OVER SIZE,RIK-VENT)12KG/CM2	1		1.3L411	
	101	12036-14600	SET-RING,PISTON(0.50MM OVER SIZE)	1		1.6L411	

Printed in Japan

REVISED: SEPTEMBER,1968

S	KEY NO.	PART NO.	PART NAME	Q'TY	SALES UNIT	MODEL	ICA
	102	12036-14601	SET-RING,PISTON(0.50MM OVER SIZE,RIK-VENT)	1	1	1.6L411	
*	103	12036-13900	SET-RING,PISTON(0.75MM OVER SIZE)	1	1	1.3L411	
*	104	12036-13901	SET-RING,PISTON(0.75MM OVER SIZE,RIK-VENT)7KG/CM2	1		1.3L411	
	105	12036-19100	SET-RING,PISTON(0.75MM OVER SIZE,RIK-VENT)12KG/CM2	1		1.3L411	
	106	12037-14600	SET-RING,PISTON(0.75MM OVER SIZE)	1		1.6L411	
	107	12037-14601	SET-RING,PISTON(0.75MM OVER SIZE,RIK-VENT)	1	1	1.6L411	
*	108	12037-13900	SET-RING,PISTON(1.0MM OVER SIZE)	1	1	1.3L411	
*	109	12037-13901	SET-RING,PISTON(1.0MM OVER SIZE,RIK-VENT)7KG/CM2	1		1.3L411	
	110	12037-19100	SET-RING,PISTON(1.0MM OVER SIZE,RIK-VENT)12KG/CM2	1		1.3L411	
	111	12038-14600	SET-RING,PISTON(1.0MM OVER SIZE)	1		1.6L411	
	112	12038-14601	SET-RING,PISTON(1.0MM OVER SIZE,RIK-VENT)	1	1	1.6L411	
*	113	12038-13900	SET-RING,PISTON(1.25MM OVER SIZE)	1	1	1.3L411	
*	114	12038-13901	SET-RING,PISTON(1.25MM OVER SIZE,RIK-VENT)7KG/CM2	1		1.3L411	
	115	12038-19100	SET-RING,PISTON(1.25MM OVER SIZE,RIK-VENT)12KG/CM2	1		1.3L411	
*	116	12039-13900	SET-RING,PISTON(1.50MM OVER SIZE)	1	1	1.3L411	

Printed in Japan

REVISED: SEPTEMBER,1968

S	KEY NO.	PART NO.	PART NAME	Q'TY	SALES UNIT	MODEL	ICA
	117	12039-13901	SET-RING,PISTON(1.50MM OVER SIZE,RIK-VENT)7KG/CM2	1	1	1.3L411	
	118	12039-19100	SET-RING,PISTON(1.50MM OVER SIZE,RIK-VENT)12KG/CM2	1		1.3L411	
	119	12040-14600	SET-RING,PISTON(1.50MM OVER SIZE)	1		1.6L411	
	120	12040-14601	SET-RING,PISTON(1.50MM OVER SIZE,RIK-VENT)	1		1.6L411	

REVISED: SEPTEMBER,1968

Printed in Japan

NOTE

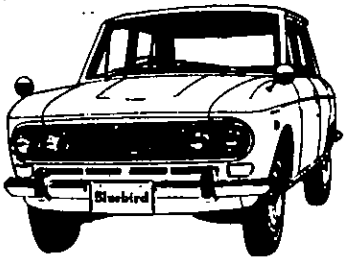

CAM SHAFT & VALVE MECHANISM

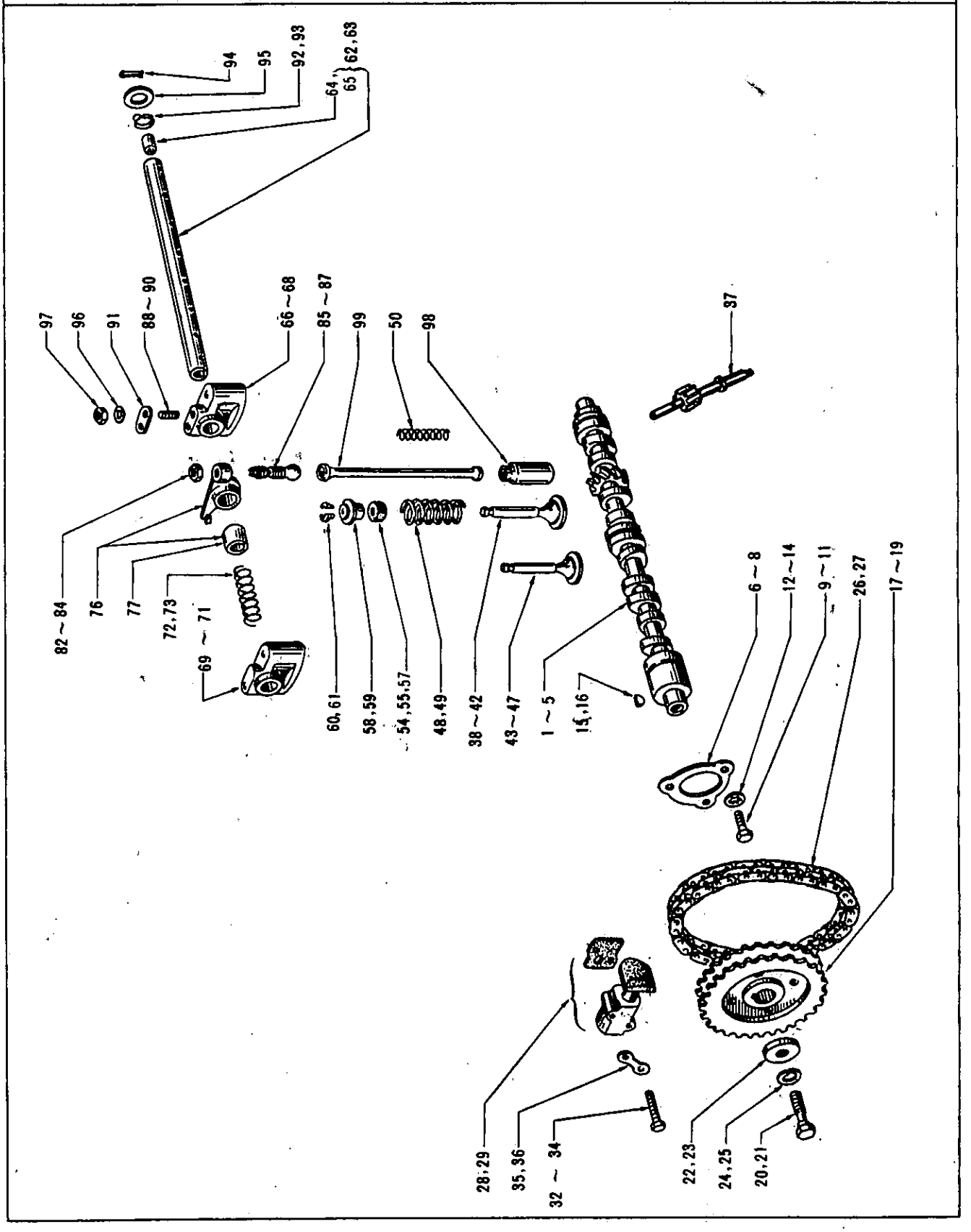

SEPTEMBER, 1968

Printed in Japan

S	KEY NO.	PART NO.	PART NAME	QTY	SALES UNIT	MODEL	ICA
			CAM SHAFT & VALVE MECHANISM				
	1	13001-09500	CAM SHAFT	1		1.3L411(EXC.UTK)	
	2	13001-16700	CAM SHAFT	1	1	UTK 411	
	3	13001-16701	CAM SHAFT	1	1	OP.UTK 411	
	4	13001-12900	CAM SHAFT(TO E/# R-40000)	1	1	1.6L411	
	5	13001-18810	CAM SHAFT(FROM E/# R-40001)	1	1	1.6L411	N
	6	13010-02701	PLATE-LOCATING,CAM SHAFT	1	1	1.3L411	
*	7	13010-32200	PLATE-LOCATING,CAM SHAFT(TO E/# R-40000)	1	10	1.6L411	
	8	13010-78200	PLATE-LOCATING,CAM SHAFT(FROM E/# R-40001)	1	5	1.6L411	N
	9	00114-42010	BOLT TO FIX LOCATING PLATE TO BLOCK	3	10	1.3L411	
	10	00111-41800	SCREW(TO E/# R-40000)TO FIX LOCATING PLATE TO BLOCK	2		1.6L411	
	11	08120-61810	SET-SCREW M6(FROM E/# R-40001)TO FIX LOCATING PLATE TO BLOCK	2	50	1.6L411	N
*	12	00916-11400	WASHER-LOCK TO FIX LOCATING PLATE TO BLOCK	3	50	1.3L411	
*	13	00915-11400	WASHER(TO E/# R-40000) TO FIX LOCATING BLATE TO BLOCK	2	50	1.6L411	
	14	08915-13610	WASHER(FROM E/# R-40001)	2	25	1.6L411	N
	15	13032-30000	KEY-CAM SHAFT(TO E/# R-40000)	1	10	411	

REVISED: SEPTEMBER,1968

Printed in Japan

S	KEY NO.	PART NO.	PART NAME	Q'TY	SALES UNIT	MODEL	ICA
	16	00924-61610	KEY-CAM SHAFT(FROM E/# R-40001)	1		411	N
	17	13024-30800	GEAR-CAM SHAFT	1	1	1.3L411	
	18	13024-32200	GEAR-CAM SHAFT(TO E/# R-40000)	1	1	1.6L411	
	19	13024-78200	GEAR-CAM SHAFT(FROM E/# R-40001)	1		1.6L411	N
	20	13082-08000	BOLT-CAM SHAFT GEAR(TO E/# R-40000)	1	10	411	
	21	13012-78200	BOLT-CAM SHAFT GEAR(FROM E/# R-40001)	1		411	N
	22	13030-08000	WASHER-CAM SHAFT(TO E/# R-40000)	1	100	411	
	23	13013-78200	WASHER-CAM SHAFT(FROM E/# R-40001)	1		411	N
*	24	00915-11600	WASHER-LOCK(TO E/# R-40000)	1	50	411	
	25	08915-14010	WASHER-LOCK(FROM E/# R-40001)	1	50	411	N
*	26 *	13028-10600	ASSY-CHAIN,TIMING	1		1.3L411	
	27	13028-32200	CHAIN-CAM SHAFT	1		1.6L411	
	28 *	13070-10600	ASSY-TENSIONER,CHAIN(SPRING2KG)	1	1	1.3L411	
	29	13070-32200	ASSY-TENSIONER,CHAIN	1	1	1.6L411	
*	30	13072-09400	SPRING-CHAIN TENSIONER (3KG)	1	10	1.3L411	
	31	13072-10600	SPRING-CHAIN TENSIONER (2KG)	1	10	1.3L411	
	32	00114-43810	BOLT TO FIX CHAIN TENSIONER	2	50	1.3L411	
	33	00111-43800	SCREW TO FIX CHAIN TENSIONER	2		1.6L411	
	34	08120-63810	SCREW TO FIX CHAIN TENSIONER	2	25	1.6L411	N

Printed in Japan

REVISED: SEPTEMBER,1968

S	KEY NO.	PART NO.	PART NAME	QTY	SALES UNIT	MODEL	ICA
	35	00916-11400	WASHER-LOCK TO FIX CHA IN TENSIONER	1	50	1.3L411	
	36	13078-32200	WASHER-LOCK TO FIX CHA IN TENSIONER	1		1.6L411	
	37	15040-10600	SPINDLE-DRIIVING,DISTR IBUTOR & OIL PUMP	1	1	1.3L411	
	38	13201-10600	VALVE-INTAKE	4	8	1.3L411(EX C.UTK)	
	39	13201-16700	VALVE-INTAKE	4	4	411UTK	
	40	13201-12900	VALVE-INTAKE	4	4	1.6L411	
	41	13201-12201	VALVE-INTAKE(0.2MM OVE R SIZE)	4	4	1.6L411	
	42	13201-12202	VALVE-INTAKE(0.4MM OVE R SIZE)	4	8	1.6L411	
	43	13202-09600	VALVE-EXHAUST	4	8	1.3L411(EX C.UTK)	
	44	13202-16700	VALVE-EXHAUST	4	4	UTK 411	
	45	13202-12200	VALVE-EXHAUST	4	4	1.6L411	
	46	13202-12201	VALVE-EXHAUST(0.2MM OV ER SIZE)	4	4	1.6L411	
	47	13202-12202	VALVE-EXHAUST(0.4MM OV ER SIZE)	4	4	1.6L411	
	48	13203-08100	SPRING-VALVE(OUTER)	8	10	1.3L411	
	49	13203-32200	SPRING-VALVE(OUTER)	8		1.6L411	
	50	13204-08100	SPRING-VALVE(INNER)	8	10	411	
	51	13205-10600	ASSY-SEAL,OIL,VALVE	8	10	1.3L411	
	52	13205-14600	SEAL-VALVE SPRING(OUTE R)	8	10	1.6L411	
	53	13206-14600	SEAL-VALVE SPRING(INNE R)	8		1.6L411	
	54	13207-08000	RING-RUBBER,VALVE	8	50	1.3L411	
	55	13207-12200	RING-RUBBER,VALVE	8	50	1.6L411	

Printed in Japan

REVISED: SEPTEMBER,1968

S	KEY NO.	PART NO.	PART NAME	Q'TY	SALES UNIT	MODEL	ICA
	56	13207-12910	SEAL-LIP VALVE(UP TO E /# R-49884)	8	10	1.6L411	N
	57	13207-66700	RING-RUBBER,VALVE(FROM E/# R-49885)	8		1.6L411	N
	58	13209-08000	RETAINER-VALVE SPRING	8	20	1.3L411	
	59	13209-12900	RETAINER-VALVE SPRING	8	10	1.6L411	
	60	13209-04100	COLLET-VALVE	16	20	1.3L411	
	61	13210-12200	COLLET-VALVE	16		1.6L411	
	62	13252-30001	COMP.-SHAFT,VALVE ROCKER	1	2	1.3L411	
	63	13252-12200	COMP.-SHAFT,VALVE ROCKER	1	1	1.6L411	
	64	13254-30001	PLUG-VALVE ROCKER SHAFT	2	50	1.3L411	
	65	13254-58000	PLUG-VALVE ROCKER SHAFT	2		1.6L411	
	66	13249-30001	BRACKET-VALVE ROCKER SHAFT(TAPPET)	1	10	1.3L411	
	67	13223-12200	BRACKET-VALVE ROCKER SHAFT(TAPPET)(TO E/# R-40000)	1	1	1.6L411	
	68	13223-18810	BRACKET-VALVE ROCKER SHAFT(TAPPET)(FROM E/# R-40001)	1	2	1.6L411	N
	69	13248-30001	BRACKET-VALVE ROCKER SHAFT,PLAIN	3	20	1.3L411	
	70	13222-12200	BRACKET-VALVE ROCKER SHAFT	3	1	1.6L411	
	71	13222-18810	BRACKET-VALVE ROCKER SHAFT(FROM E/# R-40001)	3	1	1.6L411	N
	72	13256-30000	SPRING-VALVE ROCKER SHAFT	3	10	1.3L411	
	73	13256-58000	SPRING-VALVE ROCKER SHAFT	3	10	1.6L411	

Printed in Japan

REVISED: SEPTEMBER.1968

S	KEY NO.	PART NO.	PART NAME	Q'TY	SALES UNIT	MODEL	ICA
	74	00911-24710	NUT(TO E/# R-40000)	4		1.6L411	
	75	08911-24010	NUT(FROM E/# R-40001)	4		1.6L411	N
	76	13257-09400	COMP.-VALVE ROCKER	8	5	1.3L411	
	77	13260-30000	BUSHING-VALVE ROCKER	8	10	1.3L411	
	78	13258-12200	ROCKER-VALVE(R.H.)(TO E/# R-40000)	4	5	1.6L411	
	79	13258-78200	ROCKER-VALVE(R.H.)(FROM E/# R-40001)	4	50	1.6L411	N
	80	13259-12200	ROCKER-VALVE(L.H.)(TO E/# R-40000)	4	10	1.6L411	
	81	13259-78200	ROCKER-VALVE(L.H.)(FROM E/# R-40001)	4	10	1.6L411	N
	82	13247-30000	NUT-LOCK,VALVE LIFTER ADJUSTING SCREW	8	5	1.3L411	
	83	13288-58000	NUT-LOCK,VALVE LIFTER ADJUSTING SCREW(TO E/# R-40000)	8	10	1.6L411	
	84	13235-78200	NUT-LOCK,VALVE LIFTER ADJUSTING SCREW(FROM E/# R-40001)	8		1.6L411	N
*	85	13240-30000	SCREW-VALVE LIFTER ADJUSTING	8	10	1.3L411	
	86	13287-58000	SCREW-VALVE LIFTER ADJUSTING(TO E/# R-40000)	8	10	1.6L411	
	87	13234-78200	SCREW-VALVE LIFTER ADJUSTING(FROM E/# R-40001)	8		1.6L411	N
	88	13262-30000	SCREW-LOCATING,VALVE ROCKER SHAFT	1	10	1.3L411	
	89	13226-58000	SCREW-LOCATING,VALVE ROCKER SHAFT(TO E/# R-40000)	1		1.6L411	
	90	13226-78200	SCREW-LOCATING,VALVE ROCKER SHAFT(FROM E/# R-40001)	1		1.6L411	N

Printed in Japan

REVISED: SEPTEMBER,1968

S	KEY NO.	PART NO.	PART NAME	Q'TY	SALES UNIT	MODEL	ICA
	91	13261-30000	PLATE-LOCATING SCREW	1	50	1.3L411	
	92	13291-04100	SPRING-VALVE ROCKER	2	50	1.3L411	
	93	13255-58000	SPRING-VALVE ROCKER	2	10	1.6L411	

Printed in Japan

REVISED: SEPTEMBER, 1968

NOTE

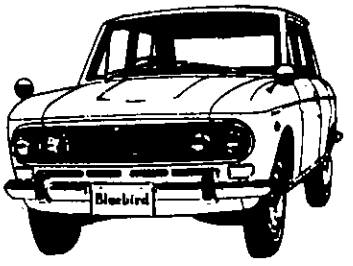

CYLINDER HEAD (1.3 L)

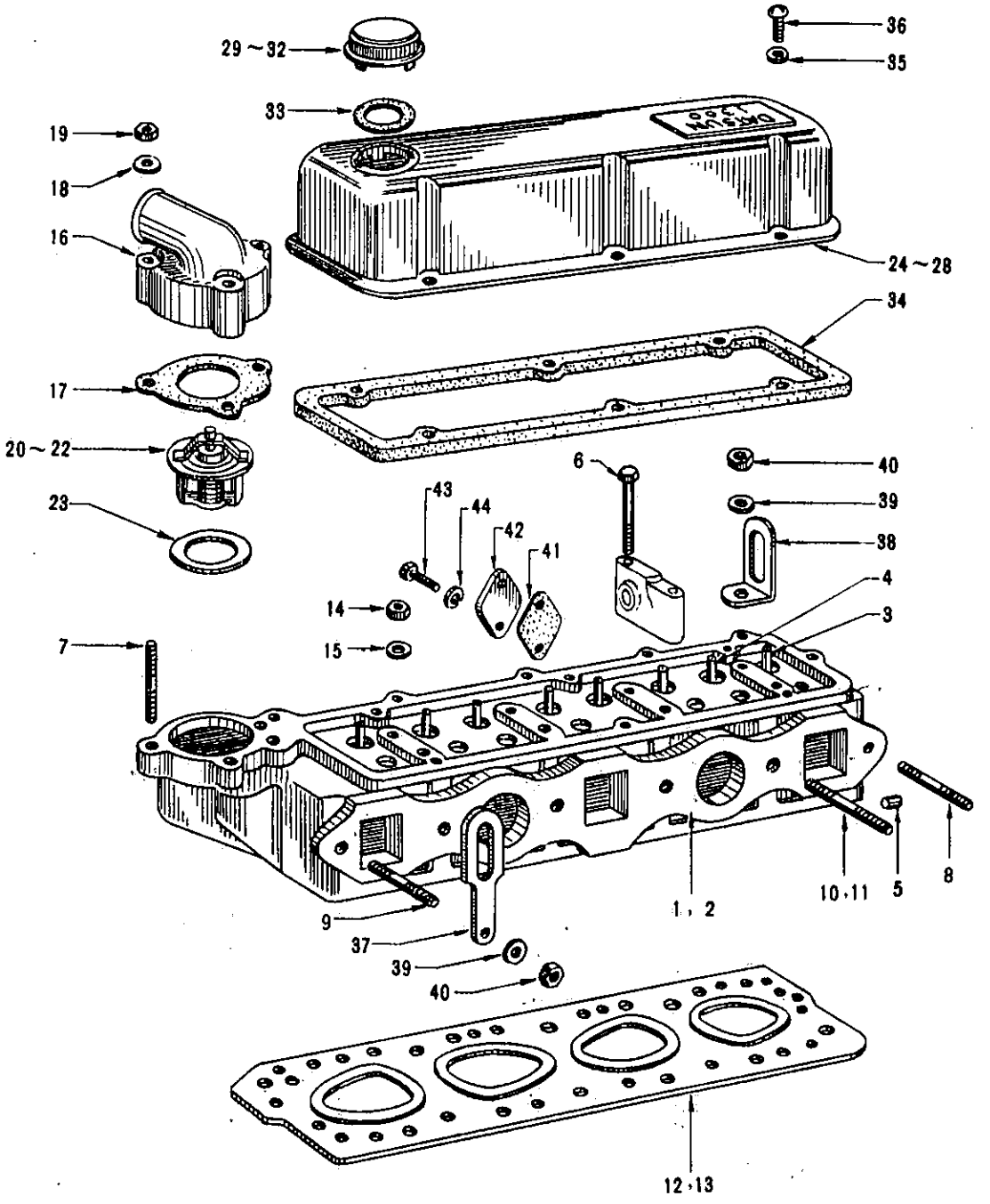

CYLINDER HEAD (1.3 L)

S	KEY NO.	PART NO.	PART NAME	Q'TY	SALES UNIT	MODEL	ICA
*	1	11041-13200	ASSY-HEAD,CYLINDER	1		1.3L411(EXC.UTK)	
	2	11041-16700	ASSY-HEAD,CYLINDER	1	1	411UTK	
	3	13211-30001	GUIDE-INLET VALVE	4		1.3L411	
*	4	13213-30001	GUIDE-EXHAUST VALVE	4	12	1.3L411	
	5	11065-30000	PLUG-OIL HOLE	1		1.3L411	
	6	00131-37000	BOLT-ROCKER BRACKET	4		1.3L411	
	7	00214-54010	STUD(TO FIX WATER OUTLET ELBOW)	3		1.3L411	
	8	00254-52500	STUD TO FIX EXHAUST MANIFOLD	1		1.3L411	
	9	00254-52800	STUD TO FIX EXHAUST MANIFOLD	1		1.3L411	
	10	14014-13200	STUD(TO FIX MANIFOLD)(TO SEP-66)	1	10	1.3L411	
	11	14014-20200	STUD(TO FIX MANIFOLD)(FROM OCT.-66)	1	10	1.3L411	N
	12	11044-13201	GASKET-CYLINDER HEAD	1	10	1.3L411(EXC.UTK)	
	13	11044-30004	GASKET-CYLINDER HEAD	1	10	UTK (1.3L) 411	
*	14	11058-10600	WASHER FOR CYLINDER HEAD STUD	11	10	1.3L411	
	15	11059-30000	NUT FOR CYLINDER HEAD STUD	11	5	1.3L411	
	16	11060-10600	ELBOW-WATER OUTLET	1	1	1.3L411	
	17	11062-30000	WASHER-JOINT,WATER OUTLET ELBOW	1	10	1.3L411	

Printed in Japan

REVISED: SEPTEMBER,1968

S	KEY NO.	PART NO.	PART NAME	Q'TY	SALES UNIT	MODEL	ICA
	18	00915-41510	WASHER TO FIX WATER OUTLET ELBOW	3		1.3L411	
	19	00911-14510	NUT TO FIX WATER OUTLET ELBOW	3		1.3L411	
	20	21200-61000	ASSY-THERMOSTAT	1	10	1.3L411	
	21	21200-61001	ASSY-THERMOSTAT(FOR THE FRIGID ZONE)	1		OP.1.3L411	
	22	21200-61002	ASSY-THERMOSTAT(88 DEGREES)	1	1	OP.1.3L411	
	23	21207-30000	WASHER-JOINT,THERMOSTAT	1		1.3L411	
	24	13264-13200	ASSY-COVER,VALVE ROCKER(DATSUN)	1	1	1.3L411(EXC.PARAGUAY & U.S.A.)	
*	25	13265-13200	ASSY-COVER,VALVE ROCKER(DATSUN)	1	1	1.3L 411(EXC.PARAGUAY & U.S.A.)	Y
	26	13265-13201	ASSY-COVER,VALVE ROCKER(NISMO)	1	1	1.3L 411 PARAGUAY ONLY	
*	27	13264-13900	ASSY-COVER,VALVE ROCKER	1	1	1.3L 411 U.S.A.ONLY	
*	28	13265-13900	ASSY-COVER,VALVE ROCKER	1	1	1.3L 411 U.S.A.ONLY	Y
	29	15255-10651	CAP-OIL FILLER	1		1.3L 411	
	30	15255-10852	CAP-OIL FILLER(TO SEP-66)	1	5	1.3L 411 (EXC.U.S.A.)	
*	31	15255-15952	CAP-OIL FILLER(FROM OCT.-66)	1	5	1.3L 411	Y
*	32	15255-15902	CAP-OIL FILLER	1	5	1.3L 411 U.S.A.	
	33	15270-11200	PACKING-OIL FILLER	1	10	1.3L 411	
	34	13273-10601	PACKING-VALVE ROCKER COVER	1	10	1.3L 411	

Printed in Japan

REVISED: SEPTEMBER,1968

S	KEY NO.	PART NO.	PART NAME	Q'TY	SALES UNIT	MODEL	ICA
*	35	00915-11400	WASHER-LOCK	6	50	1.3L 411	
	36	00311-41410	SCREW	6	50	1.3L 411	
*	37	10005-10600	SLINGER-ENGINE,FRONT	1	1	1.3L 411	
	38	10006-32200	SLINGER-ENGINE,REAR	1	1	1.3L 411	
	39	00915-41510	WASHER	2		1.3L 411	
	40	00911-14510	NUT	2		1.3L 411	
	41	15061-30000	WASHER-JOINT	1	20	1.3L 411	
	42	11066-30000	PLATE-COVER,HEATER OUT LET HOLE	1	1	1.3L 411	
	43	00114-41210	SCREW TO FIX COVER PLA TE	2		1.3L 411	
*	44	00915-21400	WASHER TO FIX COVER PL ATE	2	50	1.3L 411	

Printed in Japan

REVISED: SEPTEMBER,1968

NOTE

S	KEY NO.	PART NO.	PART NAME	Q'TY	SALES UNIT	MODEL	ICA
	97	87000-11803	ASSY_SEAT,DRIVER(GREEN)	1		SS(D TYPE) 410	
	98	87000-14003	ASSY_SEAT,DRIVER(GREEN)(FROM SEPT._64)	1		SS(D TYPE) 410	N
*	99	87000-11600	ASSY_SEAT,DRIVER(RED)	1		B TYPE 410	
	100	87000-13800	ASSY_SEAT,DRIVER(RED)(FROM SEPT._64)	1		B TYPE 410	N
	101	87000-11601	ASSY_SEAT,DRIVER(BLUE)	1		B TYPE 410	
	102	87000-13801	ASSY_SEAT,DRIVER(BLUE)(FROM SEPT._64)	1		B TYPE 410	N
	103	87000-11602	ASSY_SEAT,DRIVER(BROWN)	1		B TYPE 410	
	104	87000-13802	ASSY_SEAT,DRIVER(BROWN)(FROM SEPT._64)	1		B TYPE 410	N
	105	87000-11603	ASSY_SEAT,DRIVER(GREEN)	1		B TYPE 410	
	106	87000-13803	ASSY_SEAT,DRIVER(GREEN)(FROM SEPT._64)	1		B TYPE 410	N
	107	87501-11800	ASSY_SLIDE,DRIVER SEAT (R.H.)	1		SEPARATE SEAT 410	
	108	87502-11800	ASSY_SLIDE,DRIVER SEAT (L.H.)	1	1	SEPARATE SEAT 410	
	109	87532-11800	WIRE_PULL,SLIDE LOCK,DRIVER SEAT	1	5	SEPARATE SEAT 410	
	110	96501-11800	ASSY_ASH TRAY	1	5	SS(B.D TYPE)410	
	111	00314-00810	SCREW(TO FIX ASH TRAY)	1		SEPARATE SEAT 410	
	112	00314-51610	SCREW TO FIX SEAT SLIDE	8	50	SEPARATE SEAT 410	
	113	00915-11510	WASHER_LOCK TO FIX SEAT SLIDE	8		SEPARATE SEAT 410	
	114	00915-41510	WASHER_PLAIN TO FIX SEAT	8		SEPARATE SEAT 410	

S	KEY NO.	PART NO.	PART NAME	QTY	SALES UNIT	MODEL	ICA
	115	00915-11510	WASHER_LOCK TO FIX SEAT	8		SEPARATE SEAT 410	
	116	00911-14510	NUT TO FIX SEAT	8		SEPARATE SEAT 410	
	117	87050-11800	ASSY_SEAT,ASSISTANT(RED)	1		SS(D TYPE) 410	
	118	87050-14000	ASSY_SEAT,ASSISTANT(RED)(FROM SEPT._64)	1		SS(D TYPE) 410	N
	119	87050-11801	ASSY_SEAT,ASSISTANT(BLUE)	1		SS(D TYPE) 410	
	120	87050-14001	ASSY_SEAT,ASSISTANT(BLUE)(FROM SEPT._64)	1		SS(D TYPE) 410	N
	121	87050-11802	ASSY_SEAT,ASSISTANT(BROWN)	1		SS(D TYPE) 410	
	122	87050-14002	ASSY_SEAT,ASSISTANT(BROWN)(FROM SEPT._64)	1		SS(D TYPE) 410	N
	123	87050-11803	ASSY_SEAT,ASSISTANT(GREEN)	1		SS(D TYPE) 410	
	124	87050-14003	ASSY_SEAT,ASSISTANT(GREEN)(FROM SEPT._64)	1	1	SS(D TYPE) 410	N
◆	125	87050-11600	ASSY_SEAT,ASSISTANT(RED)	1		B TYPE 410	
	126	87050-13800	ASSY_SEAT,ASSISTANT(RED)(FROM SEPT._64)	1		B TYPE 410	N
	127	87050-11601	ASSY_SEAT,ASSISTANT(BLUE)	1		B TYPE 410	
	128	87050-13801	ASSY_SEAT,ASSISTANT(BLUE)(FROM SEPT._64)	1		B TYPE 410	N
	129	87050-11602	ASSY_SEAT,ASSISTANT(BROWN)	1		B TYPE 410	
	130	87050-13802	ASSY_SEAT,ASSISTANT(BROWN)(FROM SEPT._64)	1		B TYPE 410	N
◆	131	87050-11603	ASSY_SEAT,ASSISTANT(GREEN)	1		B TYPE 410	

Printed in Japan

REVISED: SEPTEMBER,1968

S	KEY NO.	PART NO.	PART NAME	Q'TY	SALES UNIT	MODEL	ICA
*	132	87050-13803	ASSY_SEAT,ASSISTANT(GREEN)(FROM SEPT._64)	1		B TYPE 410	N
	133	87503-11800	ASSY_SLIDE,DRIVER SEAT (R.H.)	1	1	SEPARATE SEAT 410	
	134	87504-11800	ASSY_SLIDE,DRIVER SEAT (L.H.)	1	10	SEPARATE SEAT	
	135	87532-11800	WIRE_PULL,SLIDE LOCK	1	5	SEPAREATE SEAT 410	
	136	96501-11800	ASSY_ASH TRAY	1	5	SS(B.D TYPE)410	
	137	96511-10600	SPRING_ASH TRAY	1		410	
	138	00314-00810	SCREW	2		SEPARATE SEAT 410	
	139	87000-11804	ASSY_SEAT,DRIVER RECLINING(RED)	1		OP.410	
	140	87000-11805	ASSY_SEAT,DRIVER RECLINING(BLUE)	1		OP.410	
	141	87000-11806	ASSY_SEAT,DRIVER RECLINING(BROWN)	1		OP.410	
	142	87000-11501	ASSY_SEAT,DRIVER RECLINING(YELLOW)	1		OP.410	
	143	87300-11804	ASSY_CUSHION,DRIVER SEAT(RED)	1		OP.410	
	144	87300-11805	ASSY_CUSHION,DRIVER SEAT(BLUE)	1		OP.410	
	145	87300-11806	ASSY_CUSHION,DRIVER SEAT(BROWN)	1		OP.410	
	146	87300-11501	ASSY_CUSHION,DRIVER SEAT(YELLOW)	1		OP.410	
	147	87600-11804	ASSY_SEAT BACK,DRIVER(RED)	1		OP.410	
	148	87600-11805	ASSY_SEAT BACK,DRIVER(BLUE)	1		OP.410	
	149	87600-11806	ASSY_SEAT BACK,DRIVER(BROWN)	1		OP.410	

Printed in Japan

REVISED: SEPTEMBER,1968

S	KEY NO.	PART NO.	PART NAME	Q'TY	SALES UNIT	MODEL	ICA
	150	87600-11501	ASSY_SEAT BACK,DRIVER(YELLOW)	1		OP.410	
	151	87050-11804	ASSY_SEAT,ASSISTANT RE CLINING(RED)	1		OP.410	
	152	87050-11805	ASSY_SEAT,ASSISTANT RE CLINING(BLUE)	1		OP.410	
	153	87050-11806	ASSY_SEAT,ASSISTANT RE CLINING(BROWN)	1		OP.410	
	154	87050-11501	ASSY_SEAT,ASSISTANT RE CLINING(YELLOW)	1		OP.410	
	155	87350-11804	ASSY_CUSHION,ASSISTANT SEAT(RED)	1		OP.410	
	156	87350-11805	ASSY_CUSHION,ASSISTANT SEAT(BLUE)	1		OP.410	
	157	87350-11806	ASSY_CUSHION,ASSISTANT SEAT(BROWN)	1		OP.410	
	158	87350-11501	ASSY_CUSHION,ASSISTANT SEAT(YELLOW)	1		OP.410	
	159	87650-11804	ASSY_SEAT BACK,ASSISTA NT(RED)	1		OP.410	
	160	87650-11805	ASSY_SEAT BACK,ASSISTA NT(BLUE)	1		OP.410	
	161	87650-11806	ASSY_SEAT BACK,ASSISTA NT(BROWN)	1		OP.410	
	162	87650-11501	ASSY_SEAT BACK,ASSISTA NT(YELLOW)	1		OP.410	

Printed in Japan

REVISED: SEPTEMBER,1968

NOTE

CYLINDER LOCK & KEY

Note: This figure will be given later.

S	KEY NO.	PART NO.	PART NAME	Q'TY	SALES UNIT	MODEL	ICA
			CYLINDER LOCK & KEY				
*	1	80010-11400	SET_CYLINDER,LOCK & KEY	1	1	U(UN.(D TYPE)410	
*	2	80010-11401	SET_CYLINDER,LOCK & KEY	1		U.UN.SS(D TYPE)410	Y
	3	80610-11400	ASSY_KEY,WITH HOLDER	1	5	U.UN.SS(D TYPE)410	
	4	68630-11400	ASSY_LOCK,GLOVE BOX LID	1	5	U.UN.SS(D TYPE)410	
	5	84460-10600	ASSY_CYLINDER,TRUNK LID LOCK	1		U.UN.SS(D TYPE)410	
	6	25150-10600	COM._SWITCH,IGNITION & STARTER	1	1	U.UN.SS(D TYPE)410	
	7	80600-10600	ASSY_CYLINDER,DOOR LOCK(R.H.)	1		U.UN.SS(D TYPE)410	
	8	80601-10600	ASSY_CYLINDER,DOOR LOCK(L.H.)	1	1	U.UN.SS(D TYPE)410	
	9	84360-11400	ASSY_LOCK,FUEL FILLER LID	1	1	U.UN.SS(D TYPE)410	
*	10	80590-10600	CLIP_RETAINING,CYLINDER LOCK	4	10	SS 410	
	11	80590-10601	CLIP_RETAINING,CYLINDER LOCK	5	10	U.UN.(D TYPE)410	
	12	80590-10601	CLIP_RETAINING CYLINDER LOCK	1	10	SS 410	
*	13	80010-10801	SET_CYLINDER,LOCK & KEY	1		L.LU.LN.LUN.(D TYPE) 410	
	14	80010-10803	SET_CYLINDER,LOCK & KEY	1		L.LU.LN.LUN.(D TYPE) 410	Y
*	15	80010-10802	SET_CYLINDER,LOCK & KEY	1		A.B TYPE410	

Printed in Japan
REVISED: SEPTEMBER,1968

S	KEY NO.	PART NO.	PART NAME	Q'TY	SALES UNIT	MODEL	ICA
	16	80010-10804	SET_CYLINDER,LOCK & KEY	1	1	A.B TYPE410	Y
	17	80610-11400	ASSY_KEY,WITH HOLDER	1	5	D TYPE 410	
	18	80610-10600	ASSY_KEY,WITH HOLDER	1		A.B TYPE 410	
	19	68630-10800	ASSY_LOCK,GLOVE BOX LID	1		L.LU.LN.LUN.(D TYPE) 410	
	20	84460-10600	ASSY_CYLINDER,TRUNK LID LOCK	1		A.B.D TYPE 410	
	21	25150-10600	COMP._SWITCH,IGNITION & STARTER	1	1	A.B.D TYPE 410	
	22	80600-10600	ASSY_CYLINDER,DOOR LOCK(R.H.)	1		A.B.D TYPE 410	
	23	80601-10600	ASSY_CYLINDER,DOOR LOCK(L.H.)	1	1	A.B.D TYPE 410	
	24	84360-11400	ASSY_LOCK,FUEL FILLER LID	1	1	A.B.D TYPE 410	
	25	80590-10601	CLIP_RETAINING,CYLINDER LOCK	5	10	D TYPE 410	
	26	80590-10601	CLIP_RETAINING,CYLINDER LOCK	4	10	A.B TYPE 410	
	27	80010-11000	SET_CYLINDER,LOCK & KEY	1		WAGON,410	
	28	80610-10600	ASSY_KEY,WITH HOLDER	1		WAGON,410	
	29	96807-10900	ASSY_CYLINDER,TAIL GATE	1	1	WAGON,410	
	30	25150-10600	COMP._SWITCH,IGNITION & STARTER	1	1	WAGON,410	
	31	80600-10600	ASSY_CYLINDER,DOOR LOCK(R.H.)	1		WAGON,410	
	32	80601-10600	ASSY_CYLINDER,DOOR LOCK(L.H.)	1	1	WAGON,410	
	33	80590-10601	CLIP_RETAINING,CYLINDER LOCK	3	10	WAGON,410	

Printed in Japan

REVISED: SEPTEMBER,1968

PARTS CATALOG

MODEL 411 SERIES

NISSAN MOTOR CO., LTD.

7,6-CHOME, GINZA-HIGASHI, CHUO-KU,
TOKYO, JAPAN
Cable Address : "NISMO" TOKYO
Telex : "NISMO" TK2503
Phones : (543) 5523

Pub. No. C-052E

INTRODUCTION

To bring better customer service and better spare parts supply, please note the following four points when refering to this Parts Catalog.

I. HOW TO USE THIS PARTS CATALOG

A. This Publication Number of this Parts Catalog is C-052E. Whenever quoting this Parts Catalog, inform us of this Pub. No..

B. All spare parts available for MODEL 411 are included here.

C. Spare parts are compiled in order of their functional section index which appears on page 22.

D. Brief specifications of Model 411 appear on page 3.

E. Symbols and Abbreviations appear on page 6.

F. Parts printed in gothic type signify the Assembly and Sub-assembly. Their component parts are described just below them.

For example; ASS'Y-BRAKE, front (RH) ..... Assembly
ASS'Y-SHOE, front brake ..... Sub-assembly
LINING-brake ..... Component parts

G. The Car Numbers, the Engine Numbers or the Dates in the Part Name column indicate the application of the parts which were changed.
However, in the case of the minor model changes which are made periodically, the Car Numbers (C/#) or the Engine Numbers (E/#) do not appear, instead the Year and the Month (ex. from '66-OCT., etc.) are shown in the Part Name column, while the specified Car Numbers appear beside the pictures of that model on previous pages.
The location of the Car No. and the Engine No. appears on page 7.

H. Part Number Index is attached to the end of this Parts Catalog.

II. HOW TO PLACE YOUR ORDERS FROM THIS PARTS CATALOG (FOR DISTRIBUTOR USE ONLY)

A. Typewrite the spare parts which you are going to order on the given Nissan Spare Parts Order Sheets.

B. At least the Part Numbers and the Quantity must be filled in as accurately as possible.
Otherwise our computer may reject your order.

C. In the case that you can not find the Part No. which you are going to order, we shall be very glad to take care of this problem after verifying the availability. Therefore, place your order on another order sheet, which does not include a regular order, telling us precisely the Part Name, the Place where it is attached and the Quantity - if it is a colored thing or material, attach a sample.

III. HOW TO COMPARE THE CONFIRMATION LIST AND THE PARTS CATALOG (FOR DISTRIBUTOR USE ONLY)

Although all parts contained here are in principle available for supply, if you find some parts shown in the Parts Catalog sorted F/# 5 on the confirmation list where the availability of your ordered parts are classified by our computer in respect to our stock control system, kindly tell us the Parts Numbers, the Pub. No. of the Parts Catalog (C-052E), and the Page. We shall be glad to inform you of the availability by the revised confirmation list as soon as possible.

IV. HOW TO ADAPT TO OUR PART NUMBER SYSTEM

In our parts supply system, the Part Number plays a key role. Therefore, you may print only the part numbers and the quantity as long as they do not cause mutual misunderstandings.

For this reason, kindly become familiar with our Part Number System which appears on page 13.

BRIEF SPECIFICATION

ITEMS \ MODELS		P(L)411-U(T)	P411-MTK	RL411 (WRL411)	WP(L)411-U(T)
Dimensions					
Overall Length	(m/m)	3,990	3,995	4,000	3,995
Overall Width	(m/m)	1,490	1,490	1,490	1,490
Overall Height	(m/m)	1,440	1,415	1,430 (1,445)	1,430
Wheel Base	(m/m)	2,380	2,380	2,380	2,380
Tread-Front	(m/m)	1,206	1,206	1,206	1,206
Tread-Rear	(m/m)	1,198	1,198	1,198	1,198
Road Clearance	(m/m)	175	175	165	175
Weight					
Vehicle Weight	(kg)	885	920	900 (975)	960
Seats		5	5	5	5
Performance					
Maximum Speed	(km/h)	140	145	160	140
Grade Ability	(sin)	0.357	0.385	0.479	0.309
Minimum Turning Radius	(m)	5.0	5.3	5.0	5.0
Engine					
Model		J	J	R	J
Type		(Gasoline)	(Gasoline)	(Gasoline)	(Gasoline)
Cylinder Arrangement		4-in line	4-in line	4-in line	4-in line
Cycle		4	4	4	4
Valve Arrangement		OHV	OHV	OHV	OHV
Bore × Stroke	(m/m)	73 × 77.6	73 × 77.6	87.2 × 66.8	73 × 77.6
Total Displacement	(cc)	1,299	1,299	1,595	1,299
Compression Ratio		8.2	9.0	9.0	8.2
Maximum Power	(PS/rpm)	67/5,000	72/6,000	96/6,000	67/5,000
Maximum Torque	(kg-m/rpm)	10.6/2,800	10.2/3,600	14.3/4,000	10.6/2,800
Length × Width × Height	(m/m)	597 × 585 × 690	597 × 610 × 630	620 × 635 × 660	597 × 575 × 690
Gross Engine Weight	(kg)	139	139	142	139

EXPLANATION OF EACH COLUMN

I. "S" column (preciding the KEY NO. column.)
DISTRIBUTOR USE ONLY

*..... Signifies that the part No. has been removed. In such a case, use the superseding part Nos. shown below.

..... The parts preceded by # mark are conditional order items place the order as specified in the Nissan Parts S.O.P..

II. KEY NO. column
..... A KEY NO. consists of three digits.
The key Nos. will be changed at each revision.

III. PART NO. column
..... They are as a rule ten digits.
However, 12-digit Part Nos. may rarely appear.

IV. PART NAME column
..... PART NAME column contains not only the part name but applied Car No. or Engine No. "INC" is the abbreviation of "Including".

V. Q'TY column
..... The quantity in this column shows the pieces of the part used in the section. "AR" is the abbreviation of "As Required".

VI. SALES UNIT column **(DISTRIBUTOR USE ONLY)**
..... SALES UNIT column indicates the pieces which are contained in a packing box (i.e. bulk unit).
Accordingly, if you place the order for a part multipling its sales unit, you will receive the part in a form easily to be stored into the bin (ex. Sales unit 10 ..... make your order by 19, 20, 30).
The Sales Units which are not filled-in will be advised you through the Revised Sheets.

VII. SYMBOLS AND ABBREVIATIONS IN THE APPLIED MODEL
The symbols and the abbreviations used in the applied model column are as follows. These symbols are taken by each model type, equipment (i.e. Super and Deluxe), the position of steering wheel, the transmission system, the displacement of the engine, sedan and the destinations.
..... The details of the group symbols which contain some group of the model types are shown on page 6.

III. "ICA" column

..... "ICA" is the abbreviation of Interchangeability.
"Y" is the abbreviation of Yes (i.e. Interchangeable).
"N" is the abbreviation of No (i.e. Non-interchangeable).
"C" is the abbreviation of Conditional (i.e. Interchangeable with condition).

In the case of "C" the details of the condition are described by the Figure.

..... The only modified parts carry this column.
These codes always show the relation between the part itself and the former part shown above.

SYMBOL AND ABBREVIATION

Models	Symbols	Specifications	Engine	Transmission
P411-U P411-UT	U411 UT411	Right Hand Drive Sedan	1,300 cc	3-speed 4-speed
PL411-U PL411-UT	LU411 LUT411	Left Hand Drive Sedan	1,300 cc	3-speed 4-speed
DP411-UMTK	UTK411	Right Hand Drive Sports Sedan	1,300 cc	4-speed
RL411-UTK RL411-UAK	RL-UTK411 RL-UAK411	Left Hand Drive Sedan	1,600 cc	4-speed Automatic
WP411-U WPL411-UT	WU411 WUT411	Right Hand Drive Wagon	1,300 cc	3-speed 4-speed
WPL411-U WPL411-UT	WLU411 WLUT411	Left Hand Drive Wagon	1,300 cc	3-speed 4-speed
WRL-UTK WRL-UAK	WRL-UTK411 WRL-UAK411	Left Hand Drive Wagon	1,600 cc	4-speed Automatic

GROUP SYMBOLS

Symbols	Explanation
411	The part used on all models.
R drive 411	The part used on all right hand drive models.
L drive 411	The part used on all left hand drive models.
1.3L 411	The part used on 1,300 cc engine.
1.6L 411	The part used on 1,600 cc engine.
Sedan 411	The part used on Sedan.
Wagon 411	The part used on Wagon.
High speed 411	The part used on high-speed models.
Heavy duty 411	The part used on heavy duty models.
4-speed 411	The part used on the models with 4-speed transmission.
3-speed 411	The part used on the models with 3-speed transmission.
op.	The part optionally equipped.
exc.	Except.
inc.	Including the followings.

CAR NO AND ENGINE NO

Engine manufacturing numbers and type plates are located as shown in the following places.

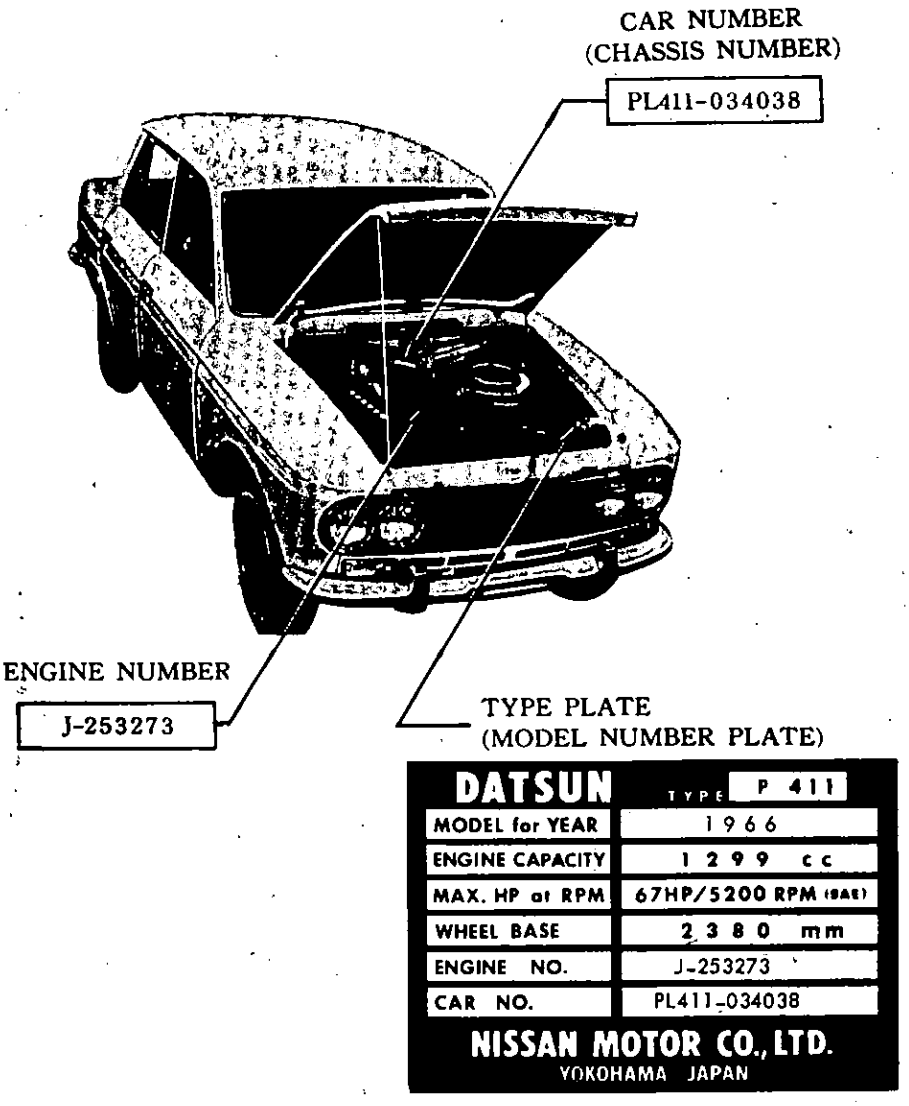

DATSUN 1300 (SEDAN)

(1965 YEAR MODEL)

MODEL P411
(FROM '65-APR TO '65-SEP)
(FROM C/# P(L)411-000001 TO 010000)

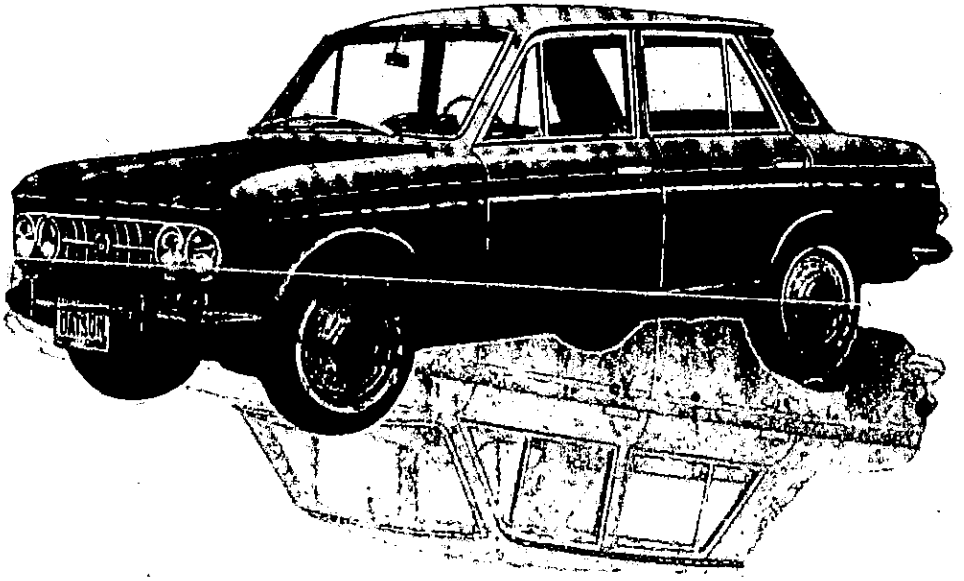

DATSUN 1300 (WAGON)

(1965 YEAR MODEL)

MODEL WP411
(FROM '65-APR TO '65-SEP)
(FROM C/# WP(L)411-800001 TO 803000)

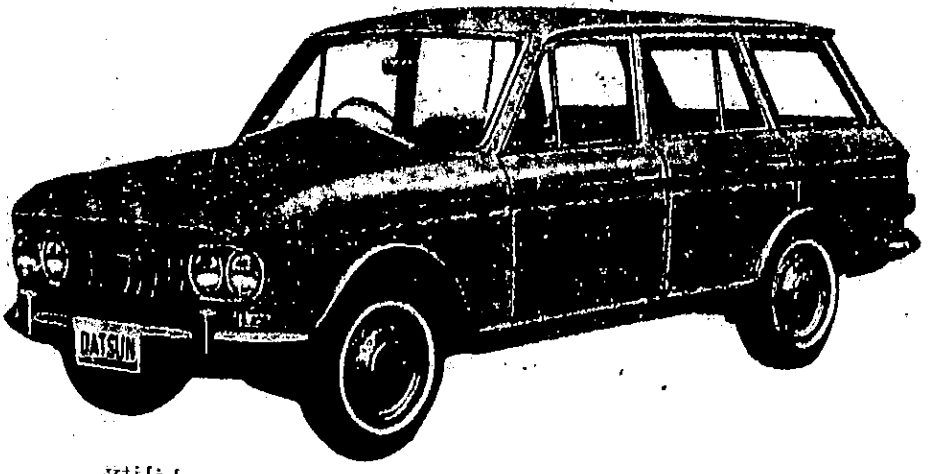

DATSUN 1300 (SEDAN)

(1966 YEAR MODEL)

MODEL P411
(FROM '65-SEP TO '66-MAR)
(FROM C/# P411-050001 TO 090100)
(FROM C/# PL411-010001 TO 030100)

DATSUN 1300 (WAGON)

(1966 YEAR MODEL)

MODEL WP411
(FROM '65-SEP TO '66-MAR)
(FROM C/# WP411-810001 TO 815000)
(FROM C/# WPL411-803001 TO 810000)

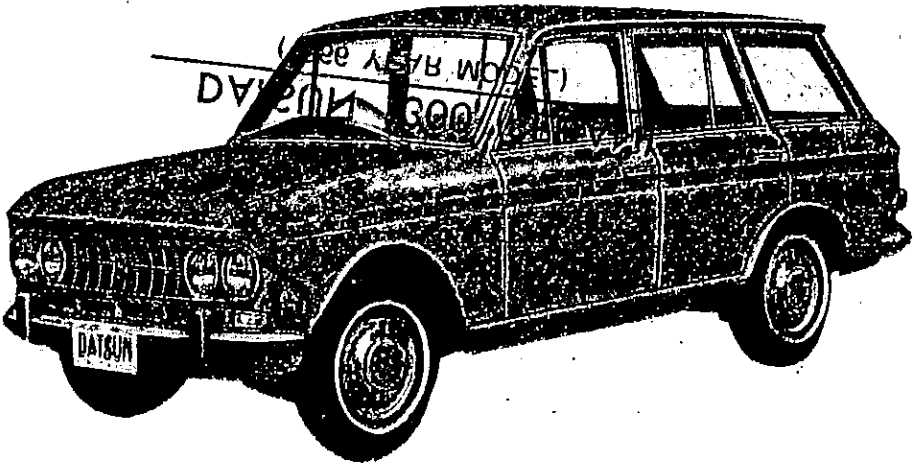

SEPTEMBER, 1966

Printed in Japa

DATSUN 1300 (SEDAN)

(1966 YEAR MODEL)

MODEL P411
(FROM '66-APR TO '66-SEP)
(FROM C/# P411-090101 TO 130100)
(FROM C/# PL411-030101 TO 040100)

DATSUN 1300 (WAGON)

(1966 YEAR MODEL)

MODEL WP411
(FROM '66-APR TO '66-SEP)
(FROM C/# WP411-815001 TO 820000)
(FROM C/# WPL411-810001 TO 820000)

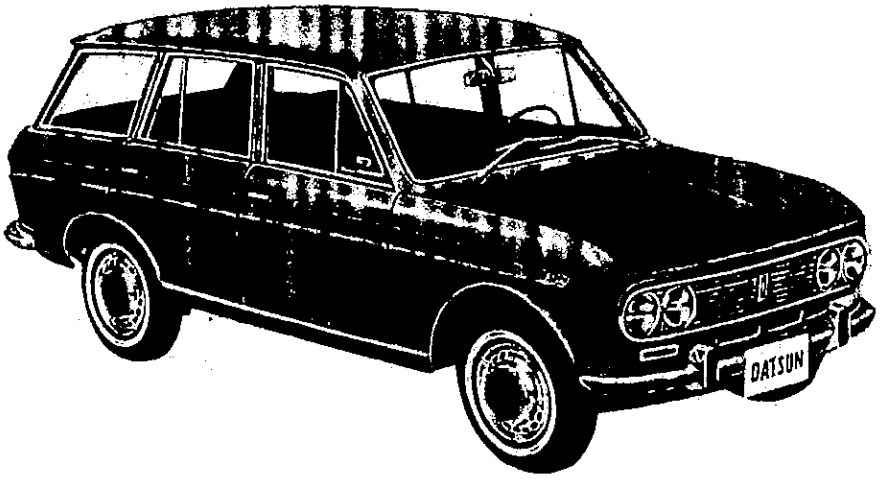

DATSUN 1300 (SEDAN)

(1967 YEAR MODEL)

MODEL P411
(FROM '66-OCT TO '67-SEP)
(FROM C/# RL411-001101)

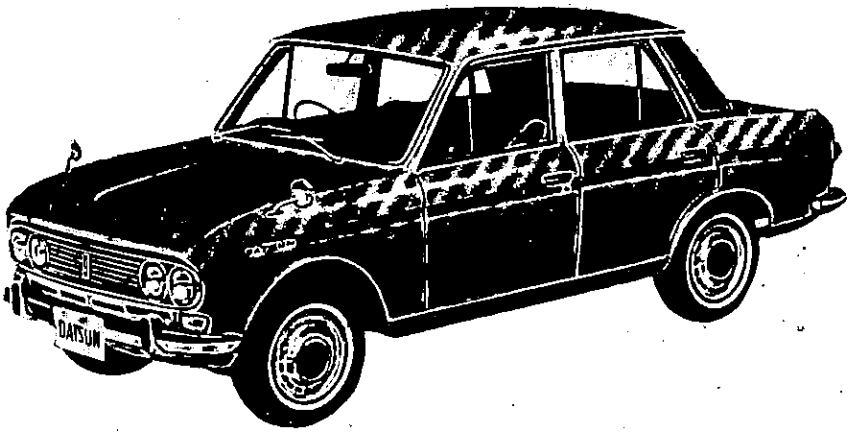

DATSUN 1300 (WAGON)

(1967 YEAR MODEL)

MODEL WP411
(FROM '66-OCT TO '67-SEP)
(FROM C/# WRL411-800001)

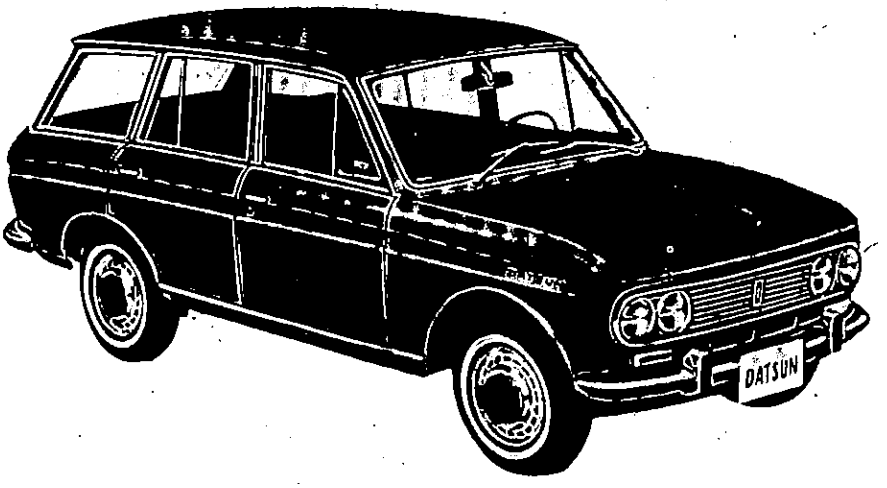

DATSUSUN 1600 (SEDAN)

(1967 YEAR MODEL)

MODEL 411
(FROM '66-OCT TO '67-SEP)
(FROM C/# P411-130101)
(FROM C/# PL411-040101)

MODEL 411
(FROM '66-OCT TO '67-SEP)
(FROM C/# WP411-820001)
(FROM C/# WPL411-820001)

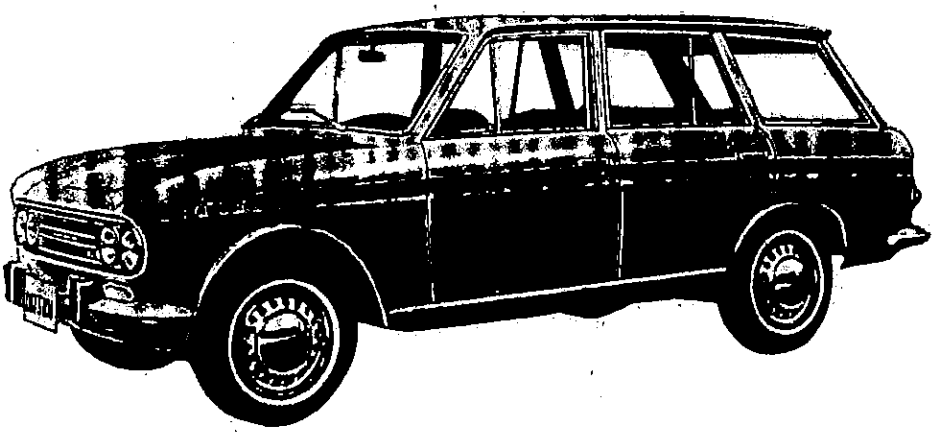

EXPLANATION OF NISSAN PARTS NUMBER SYSTEM

Our part number as a rule consists of ten digits which are made up of four factors as follows. However, in order to standardize small parts such as screws, washers, bolts, nuts and so on, which are often used on our models, we specify them as NES parts according to the Nissan Engineering Standard (N.E.S.). These NES parts in principle consist of six digits.

Section No.	Character No.		Part Type No.	Distinction No.
O O	O O O	—	O O O	O O

1. Section No. (2 digits)

   The Section No. consists of 2 digits which indicate the major function of parts.

2. Character No. (3 digits)

   The Character No. consists of 3 digits which indicate minor classification in each Section as shown by the Table of Section and Character No. on page 15. The character No. of 000 or X00 signifies the assembly parts.

3. Part Type No. (3 digits)

   The Part Type consists of 3 digits which in principle indicate the applied model as shown by the Table of Part Type on page 18. This means that the part is originally designed for that model. However, it may be used widely over our models. Therefore, it does not always signify the applied model.

4. Distinction No. (2 digits)

   The Distinction No. consists of 2 digits which indicate the difference between similar parts as shown below.

Kinds of Distinction	Distinction No.
a. Similarity	00 - 19, 60 - 69
b. Exclusive Service Use	25 - 29, 75 - 79
c. Material	40 - 45, 80 - 85
d. Processing	30 - 39, 90 - 94, 50 - 59

Note: The other Distinction Nos. are unset.

a. Similarity

When parts are only slightly changed, the distinction is shown by this No.. Similar or colored parts are distinguished by this No., too.

For example:	22145-71300	indicating a change made on.
	22145-71301	
	74902-11400	Carpet (red)
	74902-11401	Carpet (blue)
	74902-11402	Carpet (brown)

b. Exclusive Service Use

Repair kits or sets which are used exclusively for service, are set by this No.

For example:	46010-10800	Brake Master Cylinder Assembly
	46010-10825	Repair kit

c. Material

The difference of materials is distinguished by this No..

d. Processing

For the convenience of our production line process, in the case we can not supply by the original part No., the sub-assembly is supplied by this No..

For example:	20132-08750	Clamp sub-assembly Components
	20132-08700	Clamp-lower
	20133-08700	Clamp-upper
	1-24520-1	Bolt
	9-15115-1	Washer

TABLE OF SECTION AND CHARACTER NO.

S —— Section No.
C —— Character No.

Classification S	Classification C	Section
10		Engine complete section
	000	Engine complete
	100	Engine ass'y
11		Engine section No. 1
	000	Cylinder parts
	100	Oil pan parts
	200	Engine support, front
	300	Engine support, rear
	400	Engine stabilizer
12		Engine section, No. 2
	000	Piston, pin & ring
	100	Connecting rod
	200	Crank shaft
	300	Flywheel
13		Camshaft & valve section
	000	Camshaft & timing gear
	200	Valve parts
14		Manifold section
	000	Manifold parts
	300	Ejector ass'y
15		Lubrication section
	000	Oil pump
	100	Oil tube
	200	Oil filter
16		Fuel section No. 1
	000	Carburetor
	400	Gasoline strainer
	500	Air cleaner
	600	Fuel supply system
	700	Injection pump
	800	
17		Fuel section No. 2
	000	Fuel pump
	200	Fuel tank
	400	Fuel tank mounting
	500	Fuel piping
18		Engine control section
	000	Accelerator pedal
	100	Accelerator link
	400	Engine control
19		Decomp & governor section
	000	Decomp parts

Classification S	Classification C	Section
	100	Governor parts
	200	
	300	
20		Exhaust section
	000	Exhaust tube
	100	Muffler
	200	Tail tube
21		Cooling system
	000	Water pump
	200	Thermostat
	300	Oil cooler
	400	Radiator
	500	Hose & mounting parts
22		Electric section No. 1
	100	Distributor
	200	
	300	Vacuum control
	400	Plug-spark & cords
23		Electric section No. 2
	100	Generator
	200	
	300	Starter motor
	400	
	500	Regulator
24		Electric section No. 3
	000	Wiring
	100	Cable parts
	200	
	400	Battery
	500	
25		Electric section No. 4
	000	Meters
	100	Meter parts
	200	Switches
	300	Switch & parts
	400	Fuse & holder parts
26		Electric section No. 5
	000	Lamps No. 1 (Outside)
	100	
	200	Lamps No. 2 (Inside)
	300	Horn
27		Room heater & radio

Classification S	Classification C	Section
	000	Room heater
	100	Control box
	300	Radio & clock
30		Clutch group
	000	Clutch with housing
	100	Clutch disc
	200	Clutch cover & pressure plate
	400	Bell housing
	500	Clutch with drawal
	600	Clutch control
32		Transmission group
	000	Transmission ass'y
	100	Case, extension covers
	200	3-shaft gear train
	600	Synchronizer parts
	700	Speed-drive parts
	800	Shift-control parts
	900	Fork & levers
33		Auxiliary gear box section
	100	Transfer parts
	200	
	300	Power take off gear
34		Transmission control
	100	Control device
	400	Linkage
	500	Linkage parts
36		Auxiliary brake section
	100	Drum & consernings
	300	Hand brake lever
	400	Hand brake cable
	500	Linkage on axle
	600	Linkage parts
37		Propeller shaft group
	000	Propeller shaft mounting
	100	Joint & yokes
	200	Propeller shaft primary
	300	Secondary propeller shaft
	500	Center bearing & hanger
38		Final drive unit
	100	Drive pinion & gear
	200	Companion flange
	300	Gear carrier
	400	Differential gear

Classification S	Classification C	Section
	500	Front drive parts
40		Front axle section
	000	Front axle
	200	Hub & drum
	300	Road wheel
	500	Front axle parts
41		Front brake section
	000	Front brake
	100	Wheel cylinder
43		Rear axle section
	000	Rear axle
	100	Rear axle parts
	200	Hub & drum
	300	Road wheel
44		Rear brake section
	000	Rear brake
	100	Wheel cylinder
46		Master cylinder, pedal & piping
	000	Piping & cylinder ass'y
	100	Master cylinder parts
	200	Brake piping
	300	Brake tube parts
	400	Pedal parts
	500	Dust seal & mounting parts
47		Power brake section
	100	Vacuum tank
	200	Hydraulic power cylinder
	300	
	400	Vacuum tube
	500	Reservoirs mount parts
48		Steering section
	000	Steering ass'y
	100	Roller shaft
	200	Steering cover
	300	Steering mounting parts
	400	Steering wheel
	500	Steering linkage
50		Frame section
	100	Frame parts
	200	
51		Cross member section
	000	Cross member parts
	100	Hook parts
54		Front suspension section
	000	Front spring
	200	Spring mounting parts

Classification S	Classification C	Section
	300	Cross member-suspension
	400	Ass'y suspension
55		Rear suspension section
	000	Rear spring
	200	Spring mounting parts
56		Shock absorber section
	100	Front shock absorber
	200	Rear shock absorber & stabilizer
57		Spare tire section
	200	Spare tire carrier
60		Body complete white body
	000	Body front & body main
	100	Cab complete
61		Body front group
	000	Front body ass'y
62		Radiator shell & bumper section
	100	Radiator shell
	200	
	300	Radiator grille
	400	
	500	Radiator core support
	600	Bumper apron
	650	Front bumper
	800	Radiator shell fitting
63		Fender section
	100	Front fender
	800	Fender fitting
64		Hood ledge section
	100	Hood ledge
	800	Hood ledge fitting
65		Hood section
	100	Hood
	200	
	300	
	400	Hood hinge
	500	
	600	Hood lock
	700	
	800	Hood fitting
66		Cowl section
	100	Front pillar
	300	Cowl top
	400	Cowl side
	500	Ventilator
	800	Cowl fitting

Classification S	Classification C	Section
	900	Cowl trimming
67		Dash section
	100	Dash
	200	
	300	Dash lower
	800	Dash fitting
	900	Dash trimming
68		Instrument section
	100	Instrument
	200	
	300	
	400	Cluster lid
	500	Cluster lid
	600	Glove pocket & lid
	800	Instrument fitting
	900	Instrument trimming
72		Windshield section
	100	W/S outer & inner
	600	Glass & weatherstrip
	800	W/S fitting
73		Roof section
	100	Roof panel
	200	Roof rail
	800	Roof fitting
	900	Roof trimming
74		Floor section No. 1
	100	Toe riser
	200	Toe board
	300	Front floor
	400	
	500	Rear floor
	600	Under sill
	700	Seat riser
	750	Tunnel
	800	Floor member
	900	Floor trimming
76		Body side section No. 1
	100	Body side frame
	200	
	300	Body side panel
	400	Body side sill
	500	Center pillar
	600	Rear pillar
	700	Rear wheel house
	800	Body side fitting
	900	Body side trimming
78		Rear fender section
	100	Rear fender

Classification S	Classification C	Section
79		Back panel section
	100	Back panel
	200	
	300	Rear corner
	400	Rear seat back panel
	700	Rear window
	800	Back panel fitting
	900	Back panel trimming
80		Front door section No. 1
	100	Front door inner, outer
	200	Ventilator, sash
	300	Door window
	400	Hinge and check link
	500	Lock, remote control & handle
	600	
	700	Window regulator & handle
	800	Front door fitting
	900	Front door trimming
82		Rear door section No. 1
	100	Rear door inner, outer
	200	Ventilator, sash
	300	Door window
	400	Hinge & check link
	500	Lock, remote control & handle
	600	
	700	Windor regulator & handle
	800	Rear door fitting
	900	Rear door trimming
84		Trunk section
	100	Trunk floor
	200	Trunk side
	300	Trunk lid
	400	Trunk lid lock, handle & support
	500	
	600	
	800	Trunk fitting
	900	Trunk trimming
85		Rear bumper section
	100	Rear bumper apron
	200	Rear bumper bracket
	800	Rear bumper fitting
86		Front seat section No. 1
	100	Seat cushion frame
	200	Seat back frame
	300	Seat cushion & trim
	400	
	500	Seat adjusting
	600	Seat back & trim
	700	Center arm rest & trim
	800	Seat fitting

Classification S	Classification C	Section
88		Rear seat section No. 1
	100	Seat cushion frame
	200	Seat back frame
	300	Seat cushion & trim
	500	Seat adjusting
	600	Seat back & trim
	700	Center arm rest & trim
	800	Seat fitting
93		Rear body section No. 1
	100	Guard frame
	200	Header board
	300	Side board & side gate
	400	Rear gate
	500	Rear body floor
	600	
	650	Wheel housing
	700	Rear body sill
	800	Rear body fitting
	900	Rear body trimming
95		Body mounting section
	100	Body mounting
96		E.T.C. section No. 1
	100	Step & consernings
	200	Licence plate bracket
	300	Back mirror
	400	Sun visor
	500	Ash tray
	600	Fire extigusih
	700	Assist rail
	800	Package tray
	900	Body name & caution plate
97		E.T. section No. 2
	100	Reflector
	200	Plate meter
99		Car complete & tool section
	000	Car complete
	100	Chassis complete
	500	Tool & setting parts

Classification S	Classification C	Section

TABLE OF PART TYPE

Small Type Part

Vehicle Type	Part Type	Vehicle Type	Part Type	Vehicle Type	Part Type	Vehicle Type	Part Type
113	001	G222	051	A121	099	DP410 ('65)	136
L113	002	LG222	052	VA121	100	DP410-L ('65)	137
123	003	L222	053	N320	101	P410-U ('65)	138
L123	005	126	054	NL320-U	103	PL410-U ('65)	139
114	008	PG222	065	SP310	104	DP410-M ('65)	140
124	009	PLG222	066	SPL310-U	105	DP410-N	141
210	013	WP310	071	P410	106	DP410-LM	142
L210	014	223	072	410	107	P410-UT	143
220	015	G223	073	PL410	108	PL410-UT	144
L220	016	LG223	074	WP410	109	P410-P	145
G220	026	VG223	075	WPL410	110	SP311	146
211	027	VLG223	076	P410R	111	SPL311	147
221	028	U223	077	A122	112	520	148
G221	029	UL223	078	VA122	113	L520	149
L211	030	311	080	DP410	114	U520	150
L221	031	P311	081	DP410-L	115	UL520	151
A20	032	WP311-U	082	P410-U	116	V520	152
115	033	PL311-U	083	P410-N	117	VL520	153
125	034	WPL311-U	084	DP410-M	118	DP410-R	156
LG220	035	A120	085	DP410-N	119	CSP311	163
U221	036	SPL213	086	DP410-LN	120	P411	165
V221	037	320	087	PL410-N	121	DP411	166
LG221	039	L320	088	SP310	122	DP411-MTK	167
P211	040	VA120	089	SPL310-U	123	P411-P	168
310	041	U320	090	A220	126	P411-UT	169
L310	042	V320	091	VA220	127	PL411-U	170
U222	043	UL320-U	092	SP310 ('65)	129	PL411-UT	171
P310	044	VL320-U	093	SPL310 ('65)	130	P411-UTK	172
WPL310	045	312	094	A220-H	131	PL411-UTK	173
VG222	046	P312	095	P410 ('65)	132	WP411	174
SPL212	047	PL312	096	PL410 ('65)	133	WPL411-U	175
VG221	049	WP312	097	WP410 ('65)	134		
222	050	WPL312	098	WPL410 ('65)	135		

Medium Type Part

Vehicle Type	Part Type	Vehicle Type	Part Type	Vehicle Type	Part Type	Vehicle Type	Part Type
P411-N	176	B130	300	LC140	346	GQC141	396
DP411-L	178	B40	301	WP30	349	DC141	399
P411-R	179	VB40	304	40	350	GHC141	621
B10	180	C40	305	L40	351	HC141	636
VB10	181	VC40	307	C141	352	HQC141	637
B10-D	182	B131	308	P30-U	357	LH31 ('64)	700
VB10-D	183	B41	309	LC141	358	LG31 ('64)	701
P411	184	VB41	310	GLC140	359	LG31S ('64)	702
DP411	185	B42	313	F40	360	L31 ('64)	703
DP411-L	186	C42	314	FR40	361	VPL31 ('64)	704
PL411-U	187	NB42	315	VC141	362	WPL31 ('64)	705
DR411	188	VC42	316	VNC141	363	H31M ('64)	706
RL411-UTK	189	B132	317	KC141	364	H31-JD ('64)	707
P411-P	190	VB132	320	GC141	365	H31-U ('64)	708
P411-U	191	FPB42	321	VP30	366	LG31-UM ('64)	709
P411-R	192	30	322	H31	367	40T	710
DP411-R	193	C43	323	G31	368	Q40T	711
DP411-MTK	194	VC43	324	—	369	H31 ('65)	712
PL411-UTK	195	FRB42	325	31	370	G31 ('65)	713
WP411	196	D30	326	VP31	371	G31S ('65)	714
VP411	197	V30	327	WP31	372	31 ('65)	715
WPL411	198	KC43	330	GLC141	373	VP31-K ('65)	716
A221	199	B140	331	LH31	378	WP31 ('65)	717
GA221	200	NB140	332	H31U	379	TH31	718
		C140	333	G31U	380	TH31 ('65)	719
		L30	335	H31J	381	LH31-U ('65)	720
		VC140	336	H31-M	382	LG31-U ('65)	721
		VNC140	337	G31S	383	LG31S-U ('65)	722
		FRB140	338	H31 ('64)	387	VPL31-UK ('65)	723
		FB140	339	G31 ('64)	388	WPL31-U ('65)	724
		GB140	341	G31S ('64)	389	TLH31-U ('65)	725
		G30	342	31 ('64)	390		
		LB140	343	VP31-K ('64)	391		
		KC140	344	WP31 ('64)	392		

Large Type Part

Vehicle Type	Part Type	Vehicle Type	Part Type	Vehicle Type	Part Type	Vehicle Type	Part Type
G31SY-P ('65)	727	580	500	G592	556	ULG690	607
G31SY-P ('64)	728	S580	502	U592	557	UE680	608
31YP ('64)	729	L580	503	S592	558	50	610
P130-D	730	F580	504	M592	559	50 ('65)	622
P130	731	U580	505	UG592	560	T50JD ('65)	624
VP130	732	UL580	506	MG592	561	T50	628
V130		M580	507	702	566	T50 ('65)	630
WP130		ML580	508	F582	571		
W130	733	590	509	E592	574		
H130	734	G-590	510	ME592	575		
Q130	735	L590	512	GU582	579		
130	736	U590	514	680	580		
130-D		M590	517	S680	581		
130-A	737	MG590	518	M680	582		
P130-A		ML590	520	U680	583		
130-P	739	UL590	522	F680	584		
41	740	E590	524	L680	585		
F41	742	581	526	ML680	586		
LC142	743	U581	530	UL680	587		
N41	744	M581	532	U690	588		
L41	745	591	535	UG690	589		
		G591	537	G680	591		
		U591	539	MLE592	592		
		UG591	540	801	593		
		M591	543	ULG582	594		
		MG591	545	UR690	595		
		701	547	E690	596		
		E591	548	ME690	597		
		UR591	549	LG680	599		
		NUR591	550	FL680	600		
		582	551	LE690	602		
		L582	552	MLG690	603		
		U582	553	ULR690	604		
		M582	554	MLEG690	605		
		592	555	UL690	606		

Special Part

Vehicle Type	Part Type	Vehicle Type	Part Type	Vehicle Type	Part Type	Vehicle Type	Part Type
4W61	400						
2W71	405						
4W71	406						
R4W72	416						
2W65	419						
4W65	421						
F4W65	422						
L4W65	424						
4W66	433						
L4W66	438						
4W73	439						
60	440						
F4W66	441						
L60	442						
H60	443						
LH60	444						
G60	445						
LG60	446						
D4W73	447						
FH60	448						
F4W73	449						
K60	451						
KL60	452						
WG60	453						
WLG60	454						
VG60	455						
VLG60	456						
D60	457						
N60	458						
DN60	459						
DL60	461						

SECTION INDEX

PART NAME	FIG. NO.
ENGINE	
ENGINE ASSEMBLIES	201
CYLINDER BLOCK (1.3L)	202
CYLINDER BOLCK (1.6L)	203
PISTON & CRANK SHAFT	204
CAM SHAFT & VALVE MECHANISM	205
CYLINDER HEAD (1.3L)	206
CYLINDER HEAD (1.6L)	207
MANIFOLD (1.3L)	208
MANIFOLD (1.6L)	209
OIL PUMP (1.3L)	210
OIL PUMP (1.6L)	211
CARBURATOR (NIKKI) (EXC 1.3L UTK)	212
CARBURATOR (UTK & 1.6L)	213
AIR CLEANER (EXC UTK & 1.6L)	214
AIR CLEANER (UTK & 1.6L)	215
FUEL PUMP	216
FUEL STRAINER	217
FUEL TANK	218
ACCELERATOR (1.3L EXC UTK)	219
ACCELERATOR (1.6L & UTK)	220
EXHAUST TUBE & MOUNTING	221
WATER PUMP & FAN	222
RADIATOR	223
ENGINE MOUNTING	224
ELECTRICAL	
DISTRIBUTOR (HITACHI)	225
ALTERNATOR (MITSUBISHI)	226
STARTER MOTOR (HITACHI)	227
ELECTRICAL PARTS MOUNTING (1.3L)	228
ELECTRICAL PARTS MOUNTING (1.6L)	229
WIRING	230
ELECTRICAL UNIT	231
ROOM HEATER	232
RADIO & CLOCK	233
BATTERY	234
WINDSHIELD WIPER	235
WINDSHIELD WASHER (TO MAR-66)	236
WINDSHIELD WASHER (FROM APR-66 TO SEP-66)	237
WINDSHIELD WASHER (FROM OCT-66)	238
INSTRUMENT METER	239
HEAD LAMP	240
PARK & TURN SIGNAL LAMP	241
COMBINATION LAMP (TO MAR-66)	242
COMBINATION LAMP (FROM APR-66)	243
FOG, INSPECTION & REVERSE LAMP	244
SIDE MARKER & ROOM LAMP	245
LICENCE LAMP	246
POWER TRAIN	
CLUTCH (1.3L EXC UTK)	247
CLUTCH (1.6L & UTK)	248
CLUTCH OPERATING CYLINDER	249
CLUTCH PEDAL & MASTER CYLINDER	250
TRANSMISSION ASSEMBLIES	251
TRANSMISSION CASE (3 SPEED)	252
TRANSMISSION GEAR (3 SPEED)	253
TRANSMISSION FORK & ROD (3 SPEED)	254
TRANSMISSION CASE (4 SPEED) (TO SEP-65)	255
TRANSMISSION CASE (4 SPEED) (FROM OCT-65)	256
TRANSMISSION GEAR (4 SPEED) (TO SEP-65)	257
TRANSMISSION GEAR (4 SPEED) (FROM OCT-65)	258
TRANSMISSION GEAR (C SYNCHROMESH) (FROM OCT-65)	259
TRANSMISSION FORKS & LEVER (4 SPEED) (TO SEP-65)	260
TRANSMISSION CONTROL (4 SPEED) (FROM OCT-65)	261
TRANSMISSION CASE (AUTOMATIC)	262
TRANSMISSION GEAR (AUTOMATIC)	263

PART NAME	FIG. NO.
TRANSMISSION VALVE BODIES (AUTOMATIC)	264
PROPELLER SHAFT (TO SEPT-65)	265
PROPELLER SHAFT (FROM OCT-65)	266
GEAR CARRIER	267
REMOTE CONTROL LEVER	268
REMOTE CONTROL LINKAGE (3 SPEED)	269
TRANSMISSION CONTROL (AUTOMATIC)	270
BRAKE	
BRAKE PEDAL	271
FRONT BRAKE (DRUM) (1.3L)	272
FRONT BRAKE (DSC) (1.6L)	273
REAR BRAKE	274
BRAKE PIPING	275
HAND BRAKE CONTROL	276
HAND BRAKE LINKAGE	277
AXLE	
FRONT SUSPENSION LINK	278
FRONT HUB & DRUM	279
FRONT SUSPENSION	280
REAR AXLE	281
REAR SUSPENSION AXLE	282
STEERING	
STEERING WHEEL	283
STEERING GEAR	284
STEERING LINKAGE	285
BODY	
FRONT OUTSIDE VIEW	286
FRONT FENDER & HOOD	287
HOOD LOCK CONTROL	288
WINDSHIELD GLASS	289
INSTRUMENT PANEL & FITTING	290
DASH TRIMMING	291
ROOF TRIMMING	292
FLOOR TRIMMING (TO SEP-65)	293
FLOOR TRIMMING (FROM OCT-65 TO SEPT-66)	294
FLOOR TRIMMING (FROM OCT-66)	295
FRONT DOOR PANEL	296
FRONT DOOR TRIMMING	297
FRONT DOOR LOCK & REGULATOR	298
REAR DOOR PANEL	299
REAR DOOR TRIMMING	300
REAR DOOR LOCK & REGULATOR	301
REAR FENDER & REAR PANEL	302
TAIL GATE (WAGON)	303
TAIL GATE TRIMMING & SIDE WINDOW	304
AUXILIARY FLOOR (WAGON)	305
BODY PANELS	306
FRONT SEAT (BENCH)	307
FRONT SEAT (SEPARATE)	307A
REAR SEAT (SEDAN)	308
REAR SEAT (WAGON)	309
CYLINDER LOCK & KEY	310
MISCELLENEOUS	
MISCELLENEOUS	312

NOTE

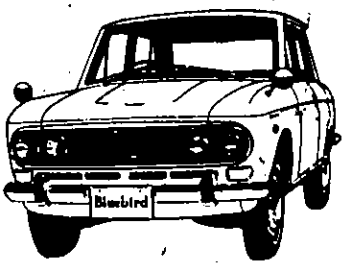

CYLINDER HEAD (1.6 L)

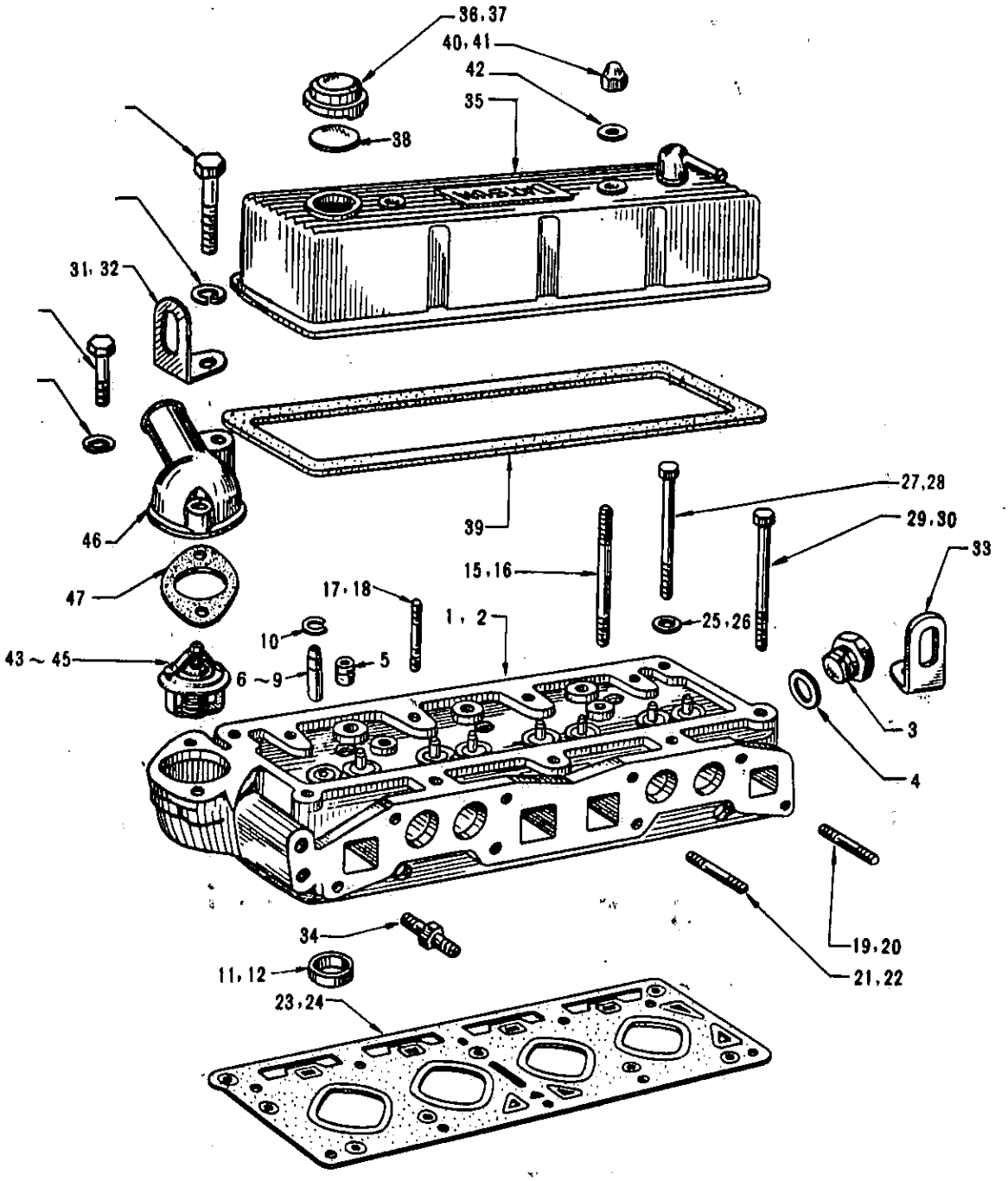

SEPTEMBER, 1968

Printed in Japan

CYLINDER HEAD (1.6 L)

S	KEY NO.	PART NO.	PART NAME	Q'TY	SALES UNIT	MODEL	ICA
	1	11041-15801	ASSY-HEAD,CYLINDER(TO E/# R-49884)	1	1	1.6L 411	
	2	11041-18811	ASSY-HEAD,CYLINDER(FROM E/# R-49885)	1	1	1.6L 411	N
	3	11051-14600	NUT-JACKET HOLE	1	10	1.6L 411	
	4	11052-14600	WASHER-JACKET HOLE	1	5	1.6L 411	
	5	00931-20800	PLUG-THREAD	3	10	1.6L 411	
*	6	13212-14601	GUIDE-VALVE INTAKE(TO E/# R-49884)	4	10	1.6L 411	
*	7	13212-18810	GUIDE-VALVE INTAKE(FROM E/# R-49885)	4	6	1.6L 411	N
	8	13213-14601	GUIDE-VALVE EXHAUST(TO E/# R-49884)	4	10	1.6L 411	
*	9	13213-18810	GUIDE-VALVE EXHAUST(FROM E/# R-49885)	4	10	1.6L 411	N
	10	13214-14600	RING-SNAP,VALVE GUIDE	8	10	1.6L 411	
	11	11098-14600	INSERT-VALVE INTAKE	4	10	1.6L 411	
	12	11099-14600	INSERT-VALVE EXHAUST	4	5	1.6L 411	
	13	11049-14600	PLUG-WELCH	2	10	1.6L 411	
	14	11056-30000	BOLT-OIL HOLE	2	10	1.6L 411	
	15	11063-32200	STUD-ROCKER COVER(TO E/# R-40000)	2	10	1.6L 411	
	16	11063-78200	STUD-ROCKER COVER(FROM E/# R-40001)	2		1.6L 411	N
	17	00264-77000	STUD-ROCKER BRACKET(TO E/# R-40000)	4	50	1.6L 411	
	18	13224-78200	STUD-ROCKER BRACKET(FROM E/# R-40001)	4	10	1.6L 411	N

Printed in Japan

REVISED: SEPTEMBER,1968

S	KEY NO.	PART NO.	PART NAME	Q'TY	SALES UNIT	MODEL	ICA
	19	00224-52810	STUD-MANIFOLD(TO E/# R-40000)	4	50	1.6L 411	
	20	08223-82810	STUD-MANIFOLD(FROM E/# R-40001)	4	50	1.6L 411	N
	21	00224-53200	STUD-MANIFOLD(TO E/# R-40000)	8		1.6L 411	
	22	08223-83210	STUD-MANIFOLD(FROM E/# R-40001)	6	25	1.6L 411	N
	23	11044-14600	GASKET-CYLINDER HEAD	1	10	1.6L 411	
	24	11044-14601	GASKET-CYLINDER HEAD	1	10	1.6L 411	Y
	25	11058-14600	WASHER-HEAD BOLT T1.6	9	10	1.6L 411	
	26	11058-18810	WASHER-HEAD BOLT T3.2	9	50	1.6L 411	Y
	27	11056-32200	BOLT-CYLINDER HEAD,SHORT(TO E/# R-40000)	9	10	1.6L 411	
	28	11056-32200	BOLT-CYLINDER HEAD,SHORT(FROM E/# R-40001)	9	10	1.6L 411	N
	29	11057-32200	BOLT-CYLINDER HEAD,LONG(TO E/# R-40000)	1	1	1.6L 411	
	30	11057-78200	BOLT-CYLINDER HEAD,LONG(FROM E/# R-40001)	1	10	1.6L 411	N
	31	10005-15800	SLINGER-ENGINE,FRONT(TO SEP-66)	1	1	1.6L 411	
	32	10005-15801	SLINGER-ENGINE,FRONT(FROM OCT.-66)	1	10	1.6L 411	Y
	33	10006-15800	SLINGER-ENGINE,REAR(FROM OCT.-66)	1	1	1.6L 411	
	34	14049-72600	CONNECTOR-WATER,CYLINDER HEAD(FROM OCT.-66)	1	5	1.6L 411	
	35	13264-16000	ASSY-COVER,VALVE ROCKER(FROM OCT.-66)	1		1.6L 411	
	36	15255-15802	CAP-OIL FILLER	1	1	1.6L 411	
	37	15255-15952	CAP-OIL FILLER	1	5	1.6L 411	Y
	38	15270-11200	PACKING-OIL FILLER	1	10	1.6L 411	

Printed in Japan

REVISED: SEPTEMBER,1968

S	KEY NO.	PART NO.	PART NAME	Q'TY	SALES UNIT	MODEL	ICA
*	39	13270-32200	GASKET-ROCKER COVER	1	10	1.6L 411	
	40	13239-10400	NUT-CAP(TO E/# R-40000)	2	50	1.6L 411	
	41	13274-18810	NUT-CAP(FROM E/# R-400 01)	2		1.6L 411	N
	42	13228-10400	WASHER-CAP NUT	2	10	1.6L 411	
	43	21200-61000	ASSY-THERMOSTAT	1	10	1.6L 411	
	44	21200-61001	ASSY-THERMOSTAT(FOR WI NTER)	1		1.6L 411	
	45	21200-61002	ASSY-THERMOSTAT(88 DEG REES)	1	1	OP.1.6L 41 1	
	46	11060-15801	ELBOW-WATER OUTLET(FRO M OCT.-66)	1	1	1.6L 411	
	47	11062-30000	WASHER-JOINT,WATER OUT LET	1	10	1.6L 411	

REVISED: SEPTEMBER,1968

Printed in Japan

NOTE

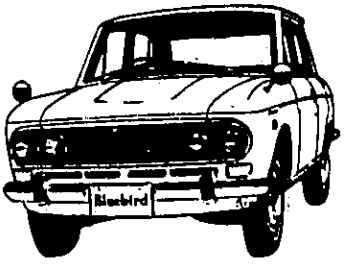

NOTE

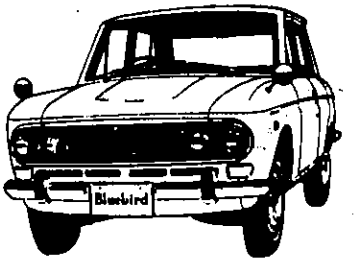

MANIFOLD (1.3 L)

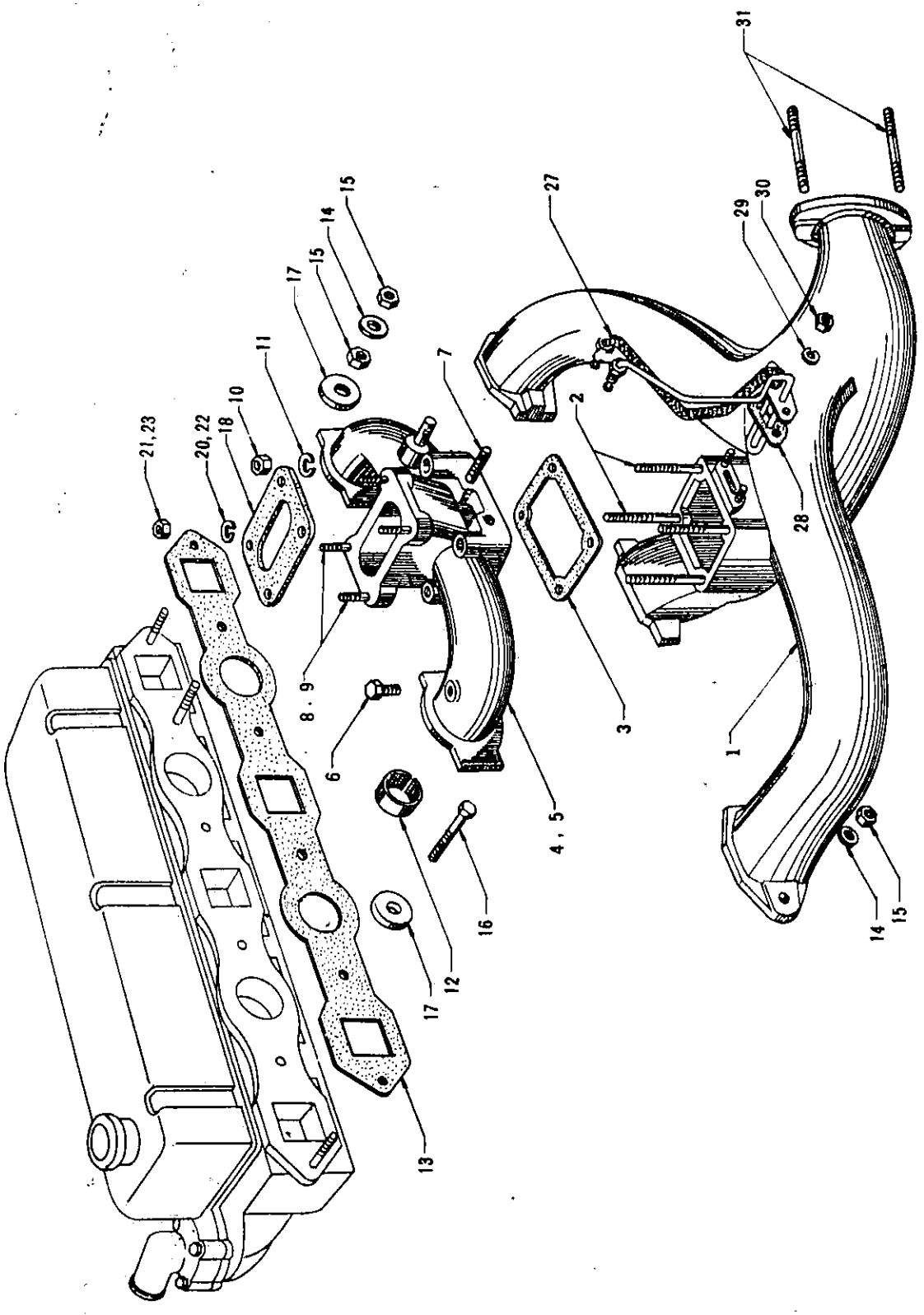

S	KEY NO.	PART NO.	PART NAME	QTY	SALES UNIT	MODEL	ICA
			MANIFOLD (1.3 L)				
	1	14004-14801	MANIFOLD-EXHAUST	1	1	1.3L 411	
	2	00214-44810	STUD(INTAKE TO EXHAUST MANIFOLD)	4	50	1.3L 411	
	3	14033-30000	WASHER-HOT SPOT	1	10	1.3L 411	
*	4	14003-13200	MANIFOLD-INTAKE(TO SEP-66)	1	1	1.3L 411	
	5	14003-24000	MANIFOLD-INTAKE(FROM OCT.-66)	1	1	1.3L 411	Y
	6	00931-30200	PLUG	1	50	1.3L 411	
	7	00214-41410	STUD(TO FIX AIR CLEANER SUPPORT)	2		1.3L 411	
	8	00214-52800	STUD(CARBURETOR TO INTAKE MANIFOLD)	4	50	1.3L 411	
	9	00214-54510	STUD(FIXING INSULATER)	4		1.3L UTK 411	
	10	00911-14410	NUT	4		1.3L 411	
*	11	00915-11400	WASHER-LOCK	4	50	1.3L 411	
	12	14034-13200	COLLAR-INTAKE MANIFOLD	2	10	1.3L 411	
	13	14035-13200	GASKET-MANIFOLD TO CYLINDER HEAD	1	10	1.3L 411	
	14	00915-41510	WASHER TO FIX EXHAUST MANIFOLD TO CYLINDER HEAD	2		1.3L 411	
	15	00911-14510	NUT TO FIX EXHAUST MANIFOLD TO CYLINDER HEAD	3		1.3L 411	
	16	00124-53510	SCREW-SET(INTAKE & EXHAUST MANIFOLD TO CYLINDER HEAD)	3	50	1.3L 411	
	17	14037-30800	YOKE-MANIFOLD	4	50	1.3L 411	

Printed in Japan

REVISED: SEPTEMBER, 1966

S	KEY NO.	PART NO.	PART NAME	QTY	SALES UNIT	MODEL	ICA
	18	16174-13200	GASKET-INSULATING,CARBURETOR	1	10	1.3L 411(EXC.UTK)	
	19	16174-15800	INSULATOR-MANIFOLD TO CARBURETOR(BAKELITE)	2	10	1.3L UTK 411	
*	20	00915-41500	WASHER-LOCK TO FIX CARBURETOR	4	50	1.3L 411(EXC.UTK)	
	21	00911-14510	NUT TO FIX CARBURETOR	4		1.3L 411(EXC.UTK)	
*	22	00915-11500	WASHER-LOCK TO FIX CARBURETOR	4	50	1.3L UTK 411	
*	23	00911-14500	NUT TO FIX CARBURETOR	4	100	1.3L UTK 411	
	24	14330-10602	PLATE-HEAT SHIELD(TO SEP-66)	1	10	1.3L UTK 411	
*	25	14330-15800	PLATE-HEAT SHIELD(FROM OCT.-66)	1		1.3L UTK 411	N
	26	16175-14600	GASKET-INSULATOR	2		1.3L UTK 411	
	27	14110-13201	ASSY-PIPE,STOVE TO CHOKE	1	1	1.3L 411	
	28	14116-71200	GASKET-STOVE PIPE	1	10	1.3L 411	
	29	00915-11410	WASHER-LOCK TO FIX STOVE PIPE	2		1.3L 411	
	30	00911-14410	NUT TO FIX STOVE PIPE	2		1.3L 411	
	31	00214-52800	STUD(TO FIX EXHAUST TUBE)	2	50	1.3L 411	

Printed in Japan

REVISED: SEPTEMBER,1968

NOTE

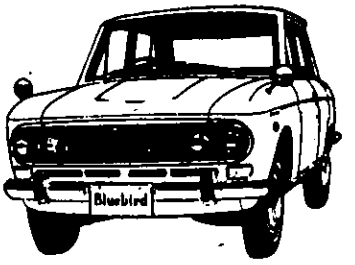

MANIFOLD (1.6 L)

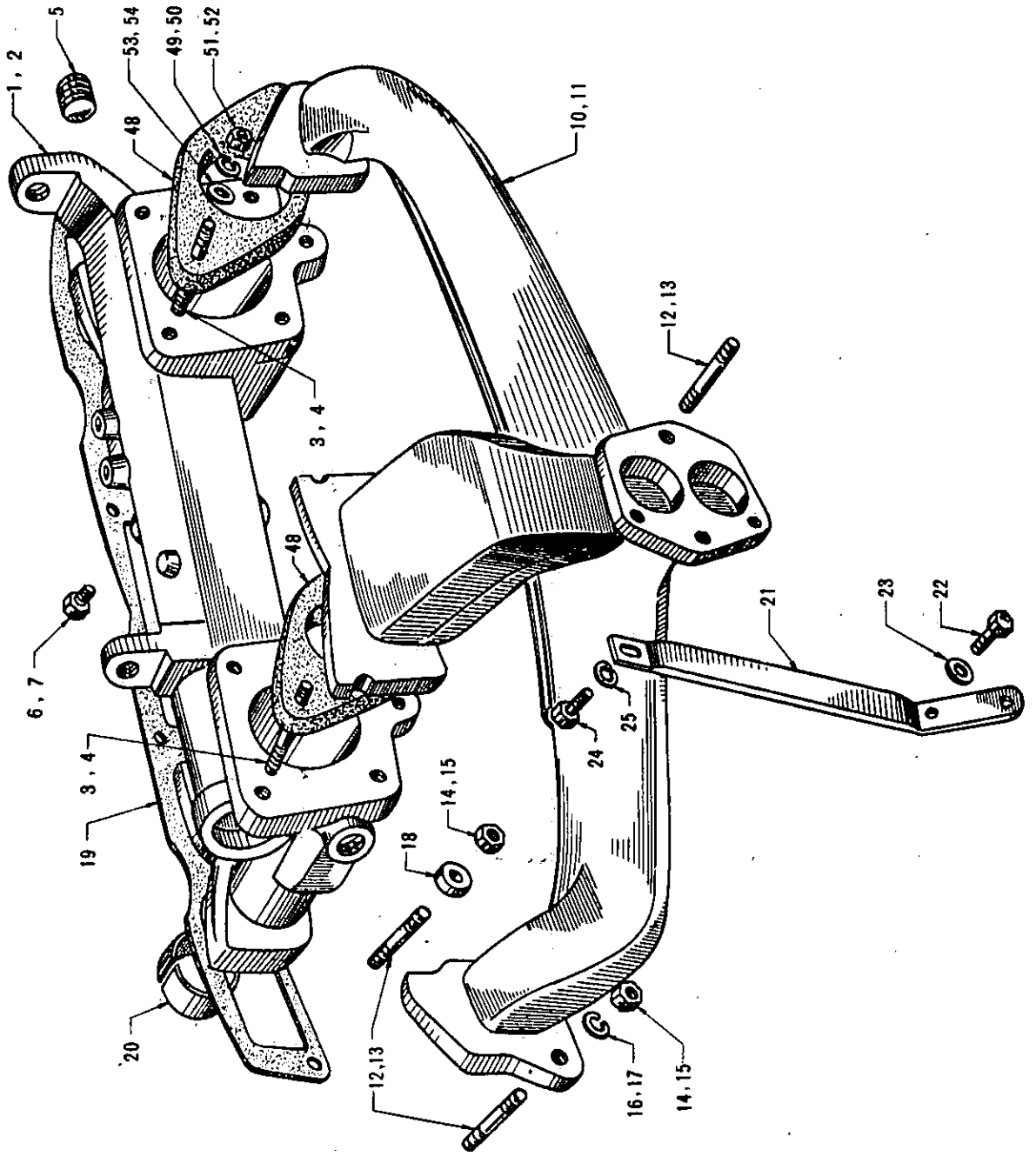

S	KEY NO.	PART NO.	PART NAME	QTY	SALES UNIT	MODEL	ICA
			MANIFOLD (1.6 L)				
	1	14002-18825	ASSY-MANIFOLD,INTAKE(TO E/# R-40000)	1	1	1.6L 411	
	2	14002-18826	ASSY-MANIFOLD,INTAKE(FROM E/# R-40001)	1	1	1.6L 411	N
	3	00214-54210	STUD(TO E/# R-40000)	4		1.6L 411	
	4	08223-84510	STUD(FROM E/# R-40001)	4	25	1.6L 411	N
	5	00931-20800	PLUG-TAPER THREAD	1	10	1.6L 411	
	6	00931-30200	PLUG(TO E/# R-40000)	1	50	1.6L 411	
	7	08931-30210	PLUG(FROM E/# R-40001)	1	50	1.6L 411	N
	8	14053-18811	CONNECTOR-MANIFOLD ELBOW(FROM E/# R-40001)	1	10	1.6L 411	
	9	14049-15800	ADAPTER-JOINT NIPPLE	1		1.6L 411	
	10	14060-15801	ASSY-MANIFOLD,EXHAUST(TO E/# R-40000)	1		1.6L 411	
	11	14060-18810	ASSY-MANIFOLD,EXHAUST(FROM E/# R-40001)	1		1.6L 411	N
	12	00254-52010	STUD(TO E/# R-40000)	3		1.6L 411	
	13	08223-82010	STUD(FROM E/# R-40001)	3	50	1.6L 411	N
	14	00911-14510	NUT(TO E/# R-40000)	10		1.6L 411	
	15	08911-20810	NUT(FROM E/# R-40001)	10	50	1.6L 411	N
	16	00915-41510	WASHER-LOCK(TO E/# R-40000)	4		1.6L 411	
	17	08915-43810	WASHER-LOCK(FROM E/# R-40001)	4	50	1.6L 411	Y
	18	14037-32200	YOKE MANIFOLD	6		1.6L 411	
	19	14035-14600	GASKET-MANIFOLD TO CYLINDER HHAD	1	10	1.6L 411	

Printed in Japan

REVISED: SEPTEMBER,1968

S	KEY NO.	PART NO.	PART NAME	Q'TY	SALES UNIT	MODEL	ICA
	20	14034-14600	COLLAR-INTAKE MANIFOLD	2	10	1.6L 411	
	21	14067-15800	STAY-EXHAUST MANIFOLD	1	1	1.6L 411	
	22	00114-61600	BOLT	2		1.6L 411	
*	23	00915-41600	WASHER-PLAIN	2	50	1.6L 411	
	24	00114-51010	BOLT	1		1.6L 411	
*	25	00915-41500	WASHER-PLAIN	1	50	1.6L 411	
*	26	27065-72800	CAP-RUBBER	1		1.6L 411	
	27	27075-32600	CLAMP-HOSE,WATER	1	1	1.6L 411	
	28	14050-15800	ASSY-COCK,THREE WAY	1	5	1.6L 411	
	29	14051-15800	HOSE-WATER,CYLINDER HEAD	1	1	1.6L 411	
	30	14051-15800	HOSE-WATER,CYLINDER HEAD	1	1	1.6L 411	
*	31	14330-15800	PLATE-HEAT SHIELD,CARBURETOR	1		1.6L 411	
*	32	14330-18810	PLATE-HEAT SHIELD,CARBURETOR	1	1	1.6L 411	Y
	33	14330-18811	PLATE-HEAT SHIELD,CARBURETOR	1	1	1.6L 411	Y
	34	00111-51410	BOLT(TO E/# R-40000)	2	100	1.6L 411	
	35	08110-81610	BOLT(FROM E/# R-40001)	2	50	1.6L 411	N
*	36	00915-11500	WASHER-LOCK(TO E/# R-40000)	2	50	1.6L 411	
	37	08915-13810	WASHER-LOCK(FROM E/# R-40001)	2	50	1.6L 411	N
	38	00915-41510	WASHER-PLAIN HEAT-SHIELD PLATE TO MANIFOLD	2		1.6L 411	
	39	08915-43610	WASHER-PLAIN HEAT-SHIELD PLATE TO MANIFOLD(FROM E/# R-40001)	2	25	1.6L 411	

Printed in Japan

REVISED: SEPTEMBER,1968

S	KEY NO.	PART NO.	PART NAME	Q'TY	SALES UNIT	MODEL	ICA
	40	14053-15801	SCREW-JOINT NIPPLE(NOT USED FROM E/# R-40001)	1		1.6L 411	
	41	14059-15800	WASHER-JOINT NIPPLE	2	1	1.6L 411	
	42	14054-15801	ASSY-TUBE,RETURN WATER (TO E/# R-40000)	1		1.6L 411	
	43	14054-18810	ASSY-TUBE,RETURN WATER (FROM E/# R-40001)	1	1	1.6L 411	N
	44	14048-15801	SUPPORT-RETURN TUBE	2		1.6L 411	
	45	14055-15801	HOSE-WATER RETURN	1		1.6L 411	
	46	00721-11600	CLAMP-HOSE,RETURN WATER	2	50	1.6L 411	
	47	00721-12200	CLAMP-HOSE	2	10	1.6L 411	
	48	16174-15800	INSULATOR-CARBURETOR	2	10	1.6L 411	
	49	00915-11510	WASHER-LOCK(TO E/# R-40000)FIXING CARBURETOR	4		1.6L 411	
	50	08915-13810	WASHER-LOCK(FROM E/# R-40001)FIXING CARBURETOR	4	50	1.6L 411	N
	51	00911-14510	NUT(TO E/# R-40000) FIXING CARBURETOR	4		1.6L 411	
	52	08911-10810	NUT(FROM E/# R-40001) FIXING CARBURETOR	4		1.6L 411	N
	53	00915-41510	WASHER-PLAIN(TO E/# R-40000)FIXING CARBURETOR	4		1.6L 411	
	54	08915-43610	WASHER-PLAIN(FROM E/# R-40001)FIXING CARBURETOR	4	25	1.6L 411	N
	55	14071-24500	BRACKET-CABLE HOLDER	1		RL-UAK,WRL-UAK 411	
	56	14052-18811	NUT-MANIFOLD,WATER(FROM E/# R-40001)	1	5	1.6L 411	

REVISED: SEPTEMBER,1968

Printed in Japan

NOTE

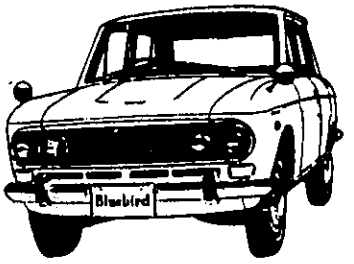

NOTE

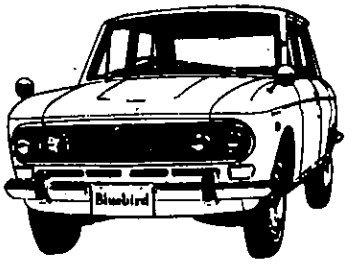

OIL PUMP (1.3 L)

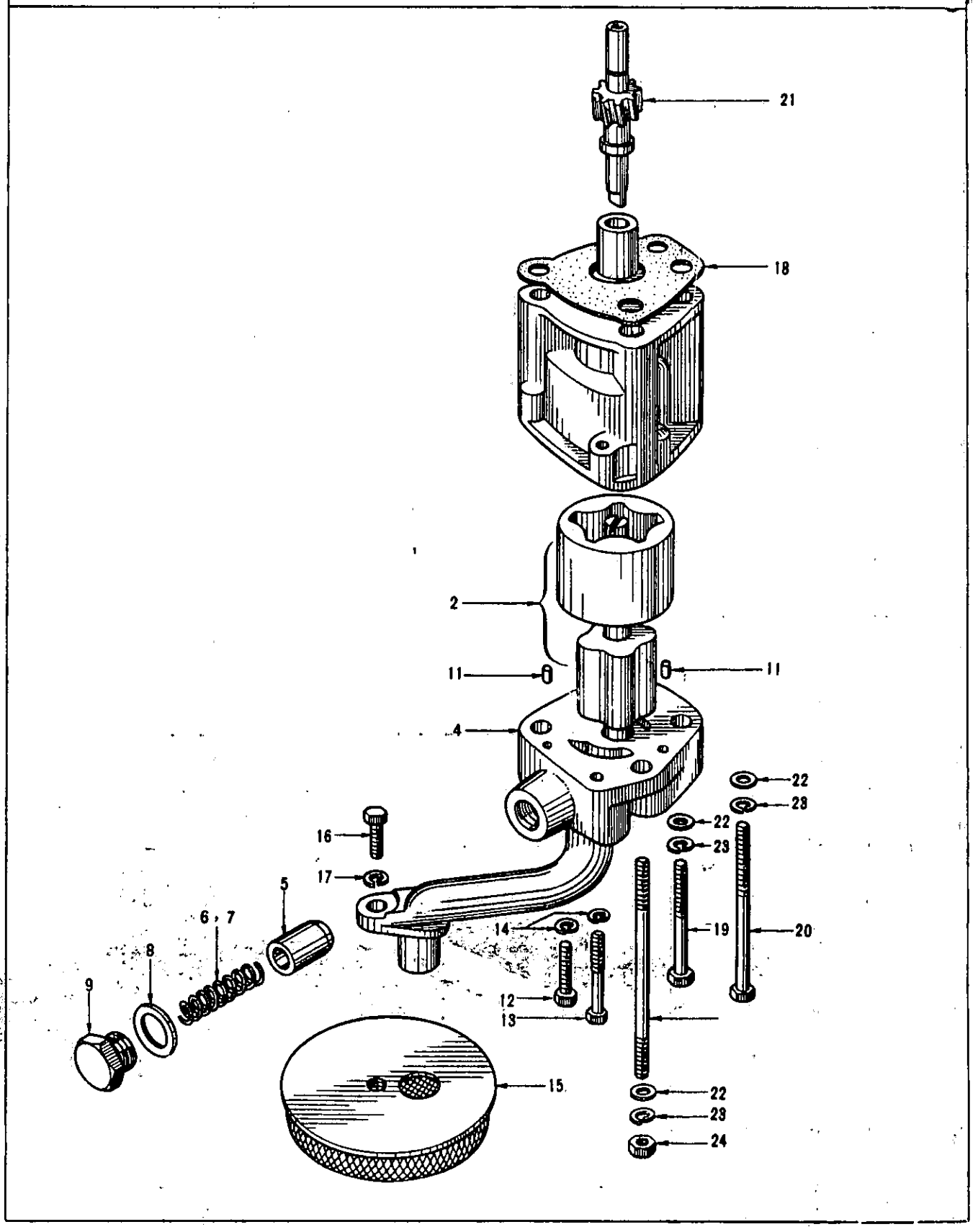

S	KEY NO.	PART NO.	PART NAME	Q'TY	SALES UNIT	MODEL	ICA
			OIL PUMP (1.3 L)				
	1	15000-10602	ASSY-OIL PUMP,WITH STRAINER	1		1.3L 411	
	2	15038-10625	KIT-GEAR,DRIVE&DRIVEN	1	1	1.3L 411	
	3	15051-10601	ASSY-COVER,OIL PUMP	1	1	1.3L 411	
	4	15015-10601	COVER-OIL PUMP	1	1	1.3L 411	
	5	15132-09400	VALVE-OIL REGULATOR	1	10	1.3L 411	
*	6	15133-10602	SPRING-VALVE,OIL REGULATOR	1	10	1.3L 411	
	7	15133-10603	SPRING-VALVE,OIL REGULATOR	1	10	1.3L 411	Y
	8	15136-10601	WASHER-OIL REGULATOR CAP NUT	1	10	1.3L 411	
	9	15134-10602	NUT-CAP,VALVE SPRING	1	5	1.3L 411	
	10	15137-10600	SHIM-OIL REGULATOR	AR	10	1.3L 411	
	11	15019-30100	PIN-DOWEL,BODY TO COVER	2	10	1.3L 411	
	12	00111-42210	BOLT TO FIX PUMP COVER	1		1.3L 411	
*	13	00111-44000	BOLT TO FIX PUMP COVER	1	1	1.3L 411	
*	14	00915-11400	WASHER-LOCK TO FIX PUMP COVER	2	50	1.3L 411	
	15	15050-12200	ASSY-STRAINER,OIL	1	1	1.3L 411	
*	16	00111-42000	BOLT TO FIX OIL STRAINER	1	100	1.3L 411	
*	17	00915-11400	WASHER-LOCK TO FIX OIL STRAINER	1	50	1.3L 411	
	18	15066-30000	GASKET(OIL PUMP TO CYLINDER BLOCK)	1	50	1.3L 411	
	19	15036-10600	BOLT	1	10	1.3L 411	

Printed in Japan

REVISED: SEPTEMBER,1968

S	KEY NO.	PART NO.	PART NAME	Q'TY	SALES UNIT	MODEL	ICA
	20	15037-09400	BOLT	1	10	1.3L 411	
	21	15040-10600	ASSY-SPINDLE,DRIVING,OIL PUMP	1	1	1.3L 411	
	22	15071-30800	WASHER-PLAIN	3	10	1.3L 411	
*	23	00915-21500	WASHER-LOCK	3	50	1.3L 411	
*	24	00911-14500	NUT	1	100	1.3L 411	

Printed in Japan

REVISED: SEPTEMBER,1968

NOTE

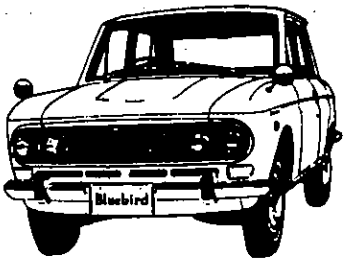

OIL PUMP (1.6 L)

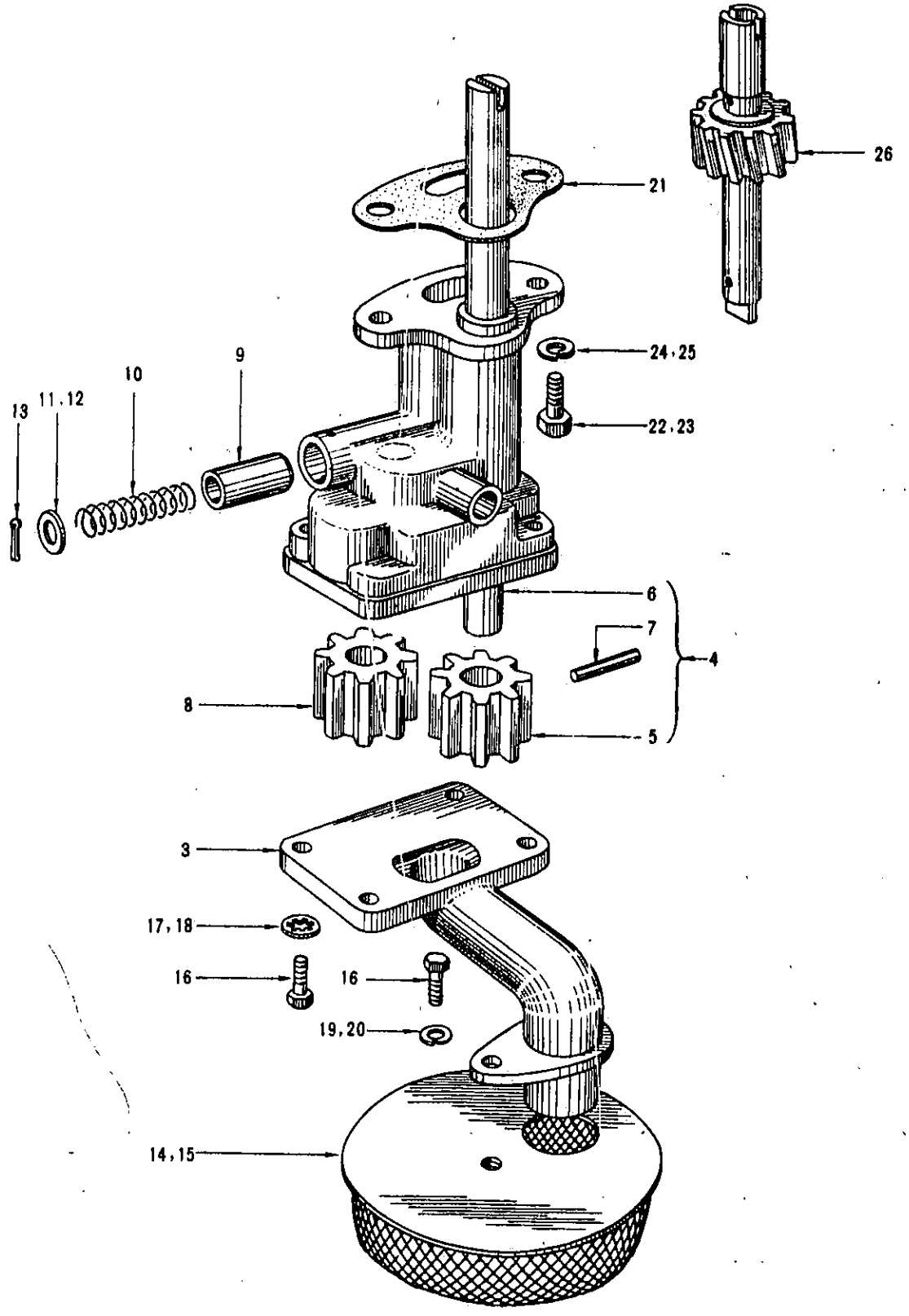

S	KEY NO.	PART NO.	PART NAME	Q'TY	SALES UNIT	MODEL	ICA
			OIL PUMP (1.6 L)				
*	1	15010-12200	ASSY-PUMP,OIL,WITH OIL STRAINER(TO E/# R-40000)	1		1.6L 411	
	2	15010-18810	ASSY-SHAFT,OIL,WITH OIL STRAINER(FROM E/# R-40001)	1	1	1.6L 411	N
	3	15015-12200	COVER-OIL PUMP	1	1	1.6L 411	
	4	15020-32200	ASSY-SHAFT,OIL PUMP	1	1	1.6L 411	
	5	15021-32200	GEAR-DRIVE,OIL PUMP	1	1	1.6L 411	
	6	15020-32200	SHAFT-OIL PUMP	1	1	1.6L 411	
	7	15030-32200	PIN-DRIVE SHAFT	1	10	1.6L 411	
	8	15023-32200	GEAR-DRIVE,OIL PUMP	1	1	1.6L 411	
	9	15132-58000	VALVE-OIL REGULATOR	1	10	1.6L 411	
*	10	15133-58000	SPRING-VALVE,OIL REGULATOR	1	10	1.6L 411	
	11	15136-58000	SHIM-OIL REGULATOR(1 MM)	1	10	1.6L 411	
	12	15137-58000	SHIM-OIL REGULATOR(2 MM)	1	50	1.6L 411	
*	13	00921-32500	PIN-COTTER	1	50	1.6L 411	
	14	15050-12200	ASSY-STRAINER,OIL(TO E/# R-40000)	1	1	1.6L 411	
	15	15050-78200	ASSY-STRAINER,OIL(FROM E/# R-40001)	1		1.6L 411	N
	16	00111-41410	BOLT	5		1.6L 411	
*	17	00916-11400	WASHER(TO E/# R-40000)	4	50	1.6L 411	
*	18	08120-61400	WASHER(FROM E/# R-40001)	4		1.6L 411	N

Printed in Japan

REVISED: SEPTEMBER,1968

S	KEY NO.	PART NO.	PART NAME	QTY	SALES UNIT	MODEL	ICA
*	19	00915-11400	WASHER-LOCK(TO E/# R-40000)	1	50	1.6L 411	
*	20	08915-13600	WASHER-LOCK(FROM E/# R-40001)	1	50	1.6L 411	N
	21	15066-32200	GASKET-OIL PUMP TO CYLINDER BLOCK	1	10	1.6L 411	
*	22	00111-52200	BOLT(TO E/# R-40000)TO FIX OIL PUMP TO CYLINDER BLOCK	2	500	1.6L 411	
*	23	08120-82200	BOLT(FROM E/# R-40001) TO FIX OIL PUMP TO CYLINDER BLOCK	2		1.6L 411	N
*	24	00915-11500	WASHER-LOCK(TO E/# R-40000)TO FIX OIL PUMP TO CYLINDER BLOCK	1	50	1.6L 411	
*	25	08915-13800	WASHER-LOCK(FROM E/# R-40001)TO FIX OIL PUMP TO CYLINDER BLOCK	1	50	1.6L 411	N
	26	15040-61000	ASSY-SPINDLE,DRIVING,OIL PUMP	1	2	1.6L 411	
*	27	15208-13201	ASSY-ELEMENT,OIL FILTER(CARTRIDGE TYPE)	1	1	411	
	28	15208-13210	ASSY-ELEMENT,OIL FILTER(CARTRIDGE TYPE)	1		411	Y
*	29	15237-13200	ASSY-BRACKET,OIL FILTER	1	1	1.3L 411	
	30	15237-13201	ASSY-BRACKET,OIL FILTER	1	1	1.3L 411	Y
*	31	15238-15800	ASSY-BRACKET,OIL FILTER	1	1	1.6L 411	
	32	15239-10600	GASKET-OIL FILTER	1		1.3L 411	
	33	15239-32200	GASKET-OIL FILTER	1	100	1.6L 411	
	34	00214-62810	STUD(TO FIX OIL FILTER ;SEE,CYLINDER BLOCK SECTION)	1		1.3L 411	
	35	00911-63000	BOLT TO FIX BRACKET	2		1.3L 411	

Printed in Japan

REVISED: SEPTEMBER,1968

S.	KEY NO.	PART NO.	PART NAME	Q'TY	SALES UNIT	MODEL	ICA
	36	00911-14610	NUT TO FIX BRACKET	1		1.3L 411	
	37	00915-11610	WASHER-LOCK TO FIX BRACKET	3		1.3L 411	
	38	00214-62210	STUD	2	50	1.6L 411	
	39	00911-14610	NUT TO FIX BRACKET	2		1.6L 411	
	40	00915-11610	WASHER-LOCK TO FIX BRACKET	2		1.6L 411	

NOTE

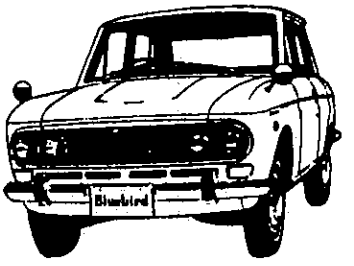

NOTE

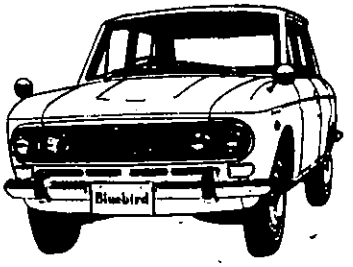

CARBURATOR (NIKKI) (1.3L EXC UTK)

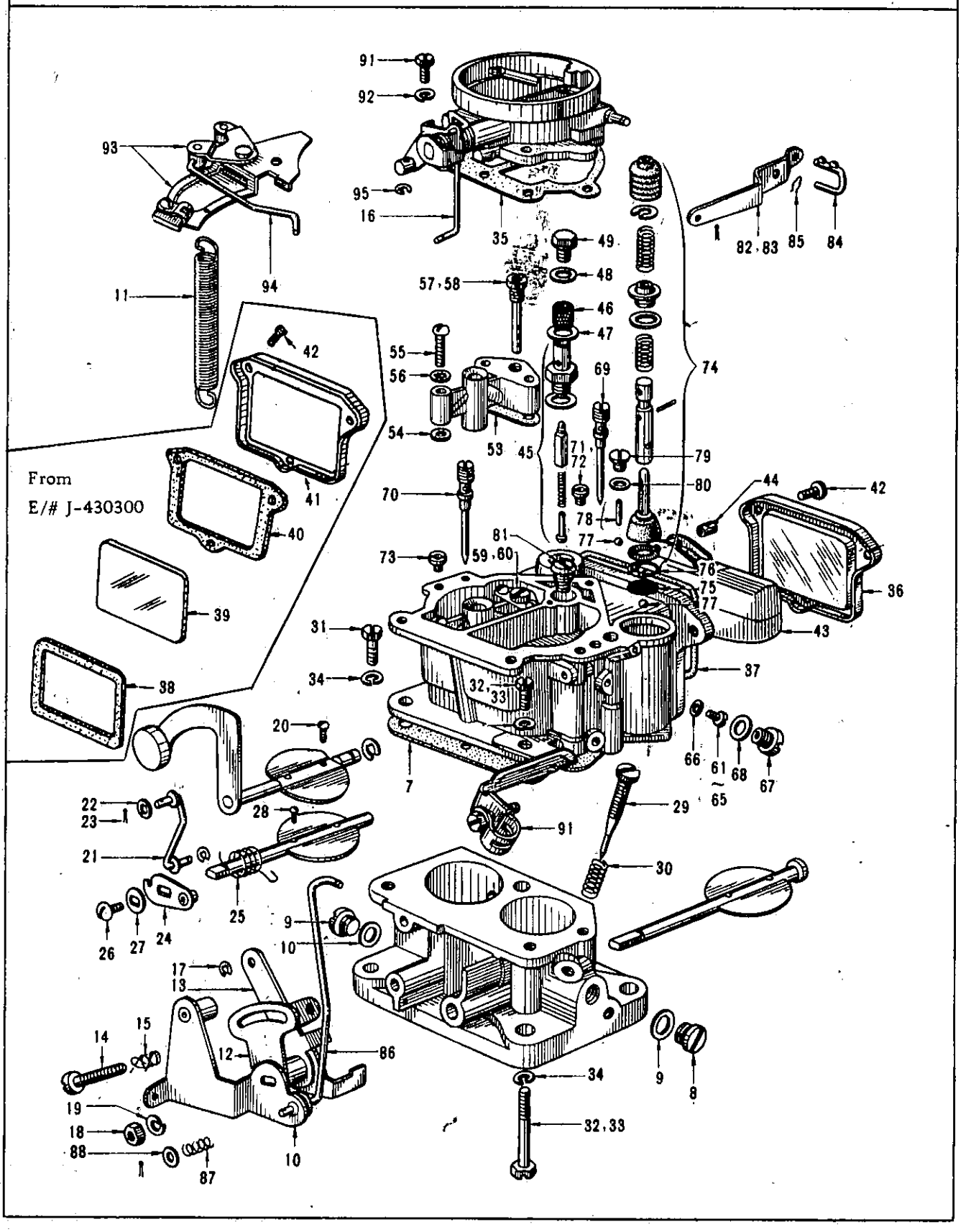

CARBURATOR (NIKKI) (1.3L EXC UTK)

S	KEY NO.	PART NO.	PART NAME	Q'TY	SALES UNIT	MODEL	ICA
*	1	16010-16500	ASSY-CARBURETOR(D2630A -5A)	1	1	1.3L 411	
*	2	16010-16501	ASSY-CARBURETOR(D2630A -6A)	1	1	1.3L 411	Y
*	3	16010-16502	ASSY-CARBURETOR(D2630A -6A)(FROM E/# J-239944 TO J-364639)	1	1	1.3L 411	Y
*	4	16010-16503	ASSY-CARBURETOR(D2630A -7B)(FROM E/# J-364640 TO J-515491)	1	1	1.3L 411	Y
	5	16010-16504	ASSY-CARBURETOR(FROM C /# J-515492)	1	1	1.3L 411	N
	6	16293-14800	KIT-FLANGE	1		1.3L 411	
	7	16117-11200	GASKET-FLANGE	1	10	1.3L 411	
	8	16031-31300	PLUG-SLOW PORT	2	1	1.3L 411	
	9	16078-31300	GASKET-PLUG SLOW PORT	2		1.3L 411	
	10	16192-14100	ASSY-LEVER,THROTTLE(P)	1	1	1.3L 411	
	11	16160-14100	SPRING-RETURN THROTTLE LEVER	1	10	1.3L 411	
	12	16277-14800	ASSY-ARM,THROTTLE	1	1	1.3L 411	
	13	16133-14800	ASSY-LEVER,STARTING TH ROTTLE	1	1	1.3L 411	
	14	16114-31300	SCREW-ADJUST THROTTLE	1	10	1.3L 411	
	15	16193-31300	SPRING-ADJUST SCREW	1	10	1.3L 411	
	16	16248-14800	ROD-CONNECTING	1	5	1.3L 411	
	17	16139-31300	CLIP	5	10	1.3L 411	
	18	16124-31300	NUT	1	1	1.3L 411	
	19	16126-31300	WASHER	1	10	1.3L 411	

Printed in Japan

REVISED: SEPTEMBER,1968

S	KEY NO.	PART NO.	PART NAME	QTY	SALES UNIT	MODEL	ICA
	20	16080-31300	SCREW	6	10	1.3L 411	
	21	16140-11200	LINK-THROTTLE	1	10	1.3L 411	
	22	16215-31300	WASHER	1		1.3L 411	
	23	16091-31300	PIN-COTTER	1	10	1.3L 411	
	24	16280-31300	ASSY-ARM THROTTLE(S)	1	5	1.3L 411	
	25	16160-30800	SPRING-RETURN THROTTLE	1	5	1.3L 411	
	26	16121-31300	SCREW	1	10	1.3L 411	
	27	16072-31300	WASHER	1	50	1.3L 411	
	28	16080-31300	SCREW	2	10	1.3L 411	
	29	16144-35000	SCREW-IDLE ADJUST	1	10	1.3L 411	
	30	16145-31301	SPRING-IDLE ADJUST SCREW	2	10	1.3L 411	
	31	16137-36700	SCREW-SET FLANGE	2	10	1.3L 411	
*	32	16127-14800	SCREW-SET FLANGE	1		1.3L 411	
	33	16174-14800	SCREW-SET FLANGE	1	2	1.3L 411	Y
	34	16217-31300	WASHER	3		1.3L 411	
	35	16109-11200	GASKET-BODY	1	10	1.3L 411	
	36	16063-11201	COVER-FLOAT CHAMBER(TO E/# J-430299)	1	1	1.3L 411	
	37	16064-11200	GASKET-FLOAT CHAMBER(TO E/# J-430299)	1	10	1.3L 411	
	38	16064-35000	GASKET-FLOAT COVER,BODY SIDE(FROM E/# J-430300)	1	10	1.3L 411	C
	39	16125-35000	GLASS-FLOAT CHAMBER(FROM E/# J-430300)	1	1	1.3L 411	C
	40	16079-35000	GASKET-FLOAT COVER,HOLDER SIDE(FROM E/# J430300)	1	10	1.3L 411	C
	41	16063-35000	HOLDER-FLOAT COVER(FROM E/# J-430300)	1		1.3L 411	C

Printed in Japan

REVISED: SEPTEMBER,1968

S	KEY NO.	PART NO.	PART NAME	Q'TY	SALES UNIT	MODEL	ICA
	42	16214-31301	SCREW	3	10	1.3L 411	
	43	16061-14800	ASSY-FLOAT	1	2	1.3L 411	
	44	16062-11200	COLLAR-FLOAT PIN	1	10	1.3L 411	
	45	16092-14800	KIT-VALVE,FLOAT NEEDLE	1	10	1.3L 411	
	46	16098-08700	ASSY-STRAINER	1	10	1.3L 411	
	47	16094-31300	GASKET-BANJO UNION(A)	1	10	1.3L 411	
	48	16049-31300	GASKET-BANJO UNION(B)	1	10	1.3L 411	
	49	16108-31300	BOLT-UNION	1	10	1.3L 411	
	50	16013-14800	ASSY-VENTURI SMALL(P)	1	1	1.3L 411	
	51	16315-11200	ASSY-VENTURI SMALL(S)	1	5	1.3L 411	
	52	16315-16500	ASSY-VENTURI SMALL(S)(FROM E/# J-364640)	1		1.3L 411	N
	53	16130-11200	GASKET-VENTURI(A)	2	10	1.3L 411	
	54	16015-31300	GASKET-VENTURI(B)	2	10	1.3L 411	
	55	16129-35000	SCREW-SET VENTURI	6	10	1.3L 411	
	56	16090-31300	WASHER-TOOTH	6	50	1.3L 411	
	57	16310-11200	ASSY-JET,MAIN AIR BLEED(P)(TO E/# J-239943)	1	10	1.3L 411	
	58	16310-16500	ASSY-JET,MAIN AIR BLEED(P)(FROM E/# J-239944)	1	10	1.3L 411	N
	59	16036-14800	ASSY-JET,MAIN AIR BLEED(S)(TO E/# J-364639)	1	10	1.3L 411	
	60	16036-16500	ASSY-JET,MAIN AIR BLEED(S)(FROM E/# J-364640)	1	10	1.3L 411	N
	61	16033-31300	JET-MAIN(P)(# 92)	1	10	1.3L 411	
	62	16032-31300	JET-MAIN(P)(# 94)(TO E/# J-239943)	1		1.3L 411	N
	63	16035-31301	JET-MAIN(P)(# 90)(FROM E/# J-239944)	1	10	1.3L 411	N

Printed in Japan

REVISED: SEPTEMBER,1968

S	KEY NO.	PART NO.	PART NAME	QTY	SALES UNIT	MODEL	ICA
	64	16054-14800	JET-MAIN(S)(TO E/# J-364639)	1	10	1.3L 411	
	65	16054-37001	JET-MAIN(S)(FROM E/# J-364640)	1	10	1.3L 411	N
	66	16103-31301	GASKET-MAIN JET	2		1.3L 411	
	67	16272-31300	PLUG-MAIN JET	2		1.3L 411	
	68	16191-31301	GASKET-MAIN JET PLUG	2	10	1.3L 411	
	69	16054-37000	ASSY-JET,SLOW	1	10	1.3L 411	
	70	16189-14800	ASSY-JET,STEP	1	10	1.3L 411	
	71	16051-11200	JET-SLOW AIR BLEED(P)(# 240)(TO E/# J-239943)	1	1	1.3L 411	
	72	16051-16500	JET-SLOW AIR BLEED(P)(# 200)(FROM E/# J-239944)	1	1	1.3L 411	N
	73	16204-10600	JET-STEP AIR BLEED(S)	1	10	1.3L 411	
	74	16138-14800	ASSY-PLUNGER,PUMP	1	5	1.3L 411	
	75	16245-11200	STRAINER-PUMP	1	10	1.3L 411	
	76	16156-11200	CLIP-PUMP,STRAINER	1	1	1.3L 411	
	77	16219-11200	VALVE-PUMP	2	10	1.3L 411	
	78	16285-14800	WEIGHT-PUMP,VALVE	1	10	1.3L 411	
	79	16286-11200	PLUG-PUMP	1	10	1.3L 411	
	80	16076-31301	GASKET-PUMP,PLUG	1	10	1.3L 411	
	81	16101-14800	ASSY-JET,POWER	1	5	1.3L 411	
	82	16195-11200	ARM-PUMP(TO E/# J-364639)	1	1	1.3L 411	
	83	16195-16501	ARM-PUMP(FROM E/# J-364640)	1	5	1.3L 411	N
	84	16143-32200	LINK-LEVER,PUMP	1	10	1.3L 411	
	85	16086-35000	CLIP-LEVER,PUMP	1	10	1.3L 411	

Printed in Japan

REVISED: SEPTEMBER,1968

S	KEY NO.	PART NO.	PART NAME	Q'TY	SALES UNIT	MODEL	ICA
	86	16081-14800	ROD-CONNECTING	1	5	1.3L 411	
	87	16170-35000	SPRING-CONNECTING ROD	1	10	1.3L 411	
	88	16215-36700	WASHER	2	10	1.3L 411	
	89	16011-14800	ASSY-CHAMBER,CHOKE(TO E/# J-239943)	1	1	1.3L 411	
	90	16011-14801	ASSY-CHAMBER,CHOKE(FROM E/# J-239944)	1	1	1.3L 411	N
	91	16065-11200	SCREW	3	10	1.3L 411	
	92	16029-31300	WASHER	3		1.3L 411	
	93	16155-14800	ASSY-HOLDER,CHOKE WIRE	1	5	1.3L 411	
	94	16248-14801	ROD-CHOKE LEVER	1	5	1.3L 411	
	95	16164-31300	SCREW	1	10	1.3L 411	
	96	16091-36900	RING-E,STOP	1	1	1.3L 411	
	97	16317-16500	AIR BLEED TUBE(FROM E/# J-239944)	1		1.3L 411	
#	98	16316-16500	SET-JETS(FROM E/# J-239944)	1		1.3L 411	
	99	16035-31301	PRIMARY MAIN JET #90	1	10	1.3L 411	
	100	16310-16500	PRIMARY MAIN AIR BLEED #60	1	10	1.3L 411	
	101	16051-16500	SLOW AIR BLEED #200	1	1	1.3L 411	
	102	16317-16500	AIR BLEED TUBE 4	1		1.3L 411	
#	103	X6010-16525	REPAIR KIT-A,CARBURETOR(GASKETS,PACKINGS,WASHERS,ETC.)	1		1.3L 411	
#	104	X6010-16526	REPAIR KIT-B,CARBURETOR(SCREWS,LOCK WASHERS,CLIPS,ETC.)	1		1.3L 411	
#	105	X6010-16537	REPAIR KIT-C,CARBURETOR(JETS,VALVES,ETC.)	1		1.3L 411	
#	106	X6010-16528	REPAIR KIT-D,CARBURETOR(OVERHAUL KIT)	1		1.3L 411	

Printed in Japan

REVISED: SEPTEMBER,1968

NOTE

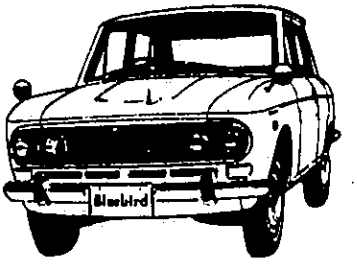

NOTE

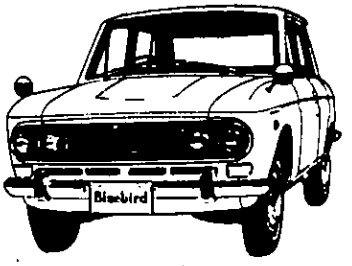

CARBURATOR (UTK & 1.6 L)

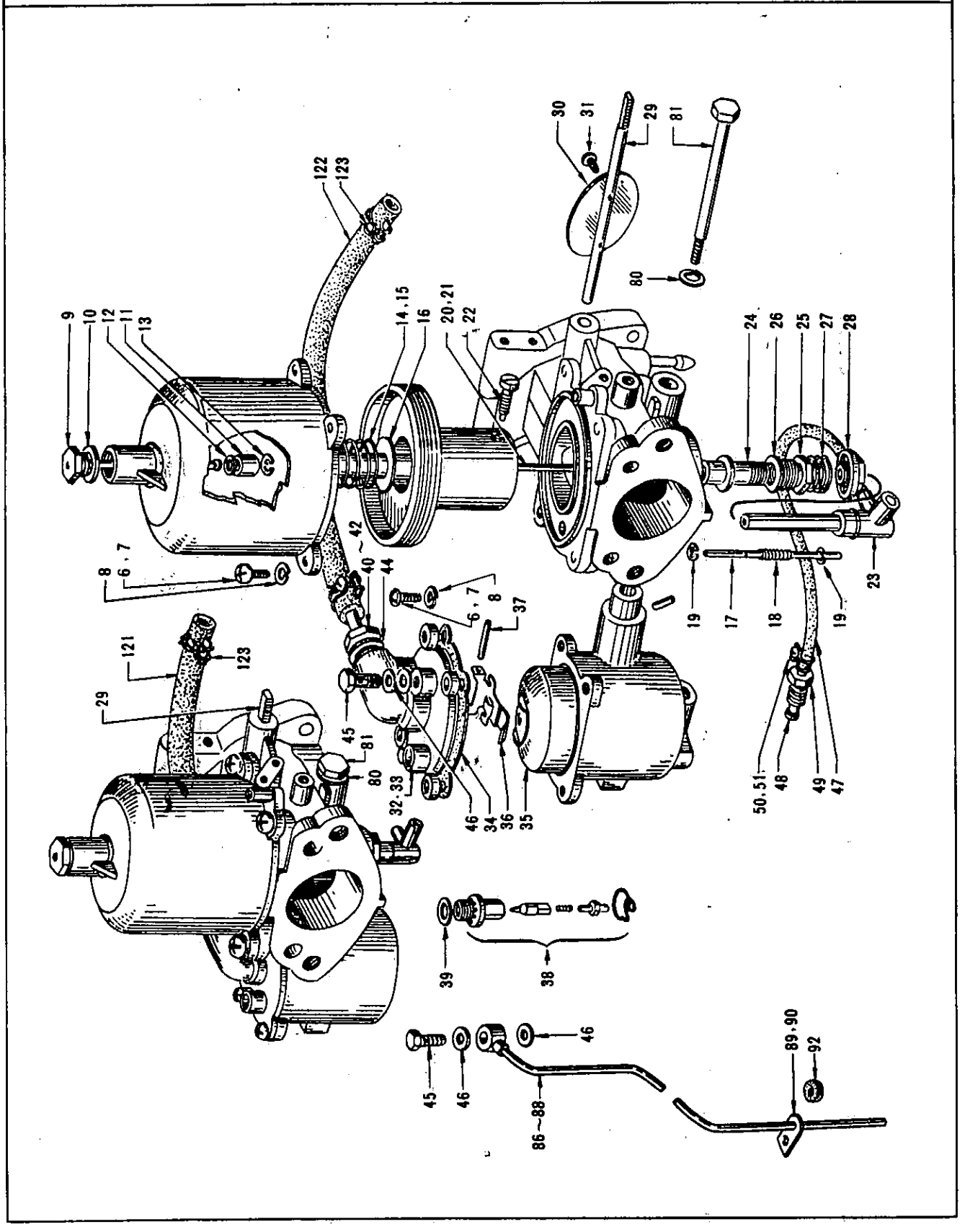

SEPTEMBER, 1968

Printed in Japan

CARBURATOR (UTK & 1.6 L)

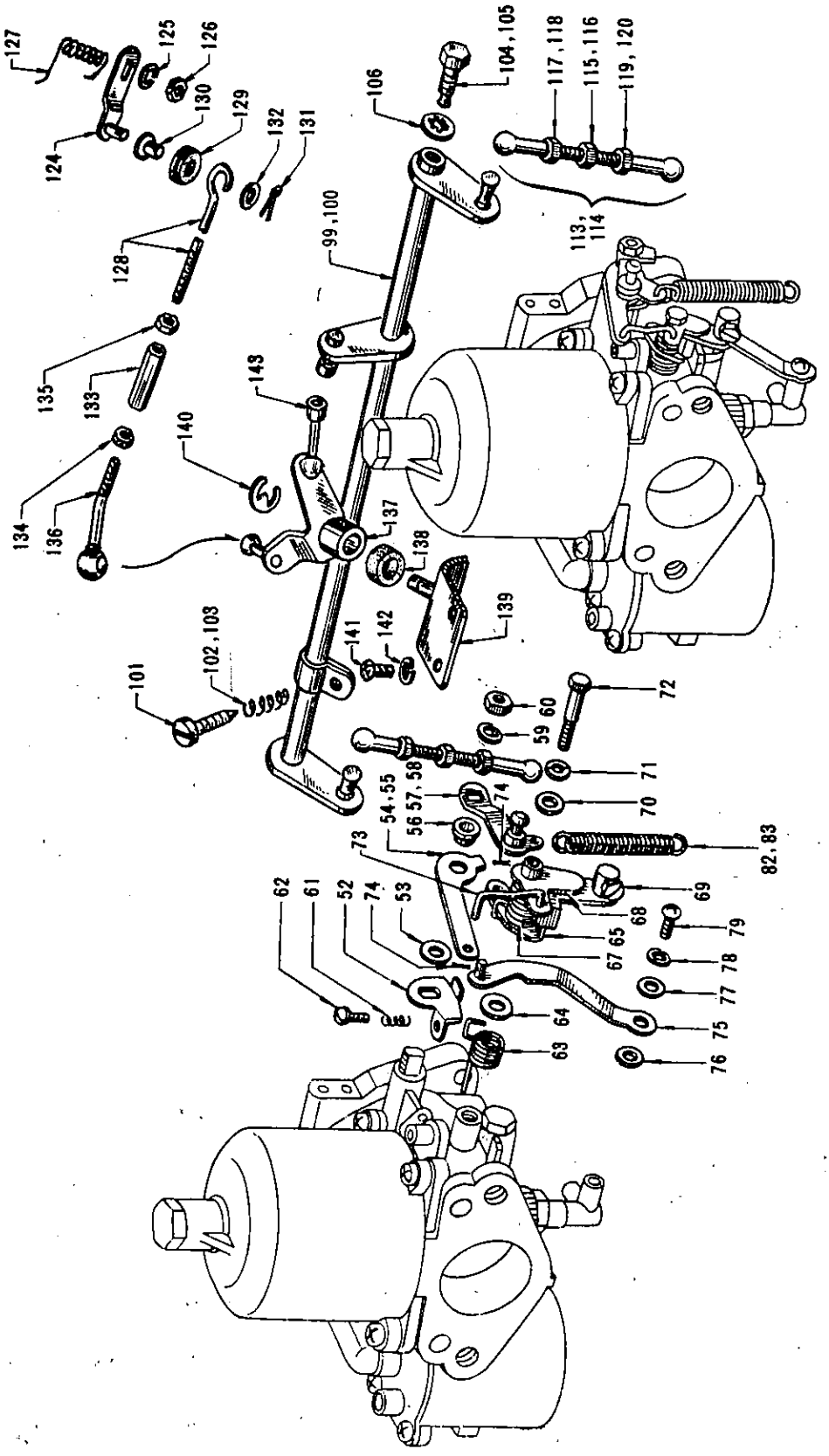

S	KEY NO.	PART NO.	PART NAME	Q'TY	SALES UNIT	MODEL	ICA
			CARBURATOR (UTK & 1.6 L)				
	1	16010-16710	ASSY-CARBURETOR,TWIN(HITACHI,HJE38W-2)	1		UTK 411	
	2	16010-15800	ASSY-CARBURETOR,TWIN(HITACHI,HJE38W-3)	1	1	RL-UTK,WRL-UTK 411	
	3	16010-18810	ASSY-CARBURETOR,SU,TWIN(FROM E/# R-40001)	1	1	RL-UTK,WRL-UTK 411	N
	4	16010-24500	ASSY-CARBURETOR,	1		RL-UAK,WRL-UAK 411	
	5	16010-18815	ASSY-CARBURETOR,SU,TWIN(FROM E/# R-40001)	1	1	RL-UAK,WRL-UAK 411	N
	6	16065-08010	SCREW 5	16	10	UTK 411	
	7	16129-73012	SCREW 5	16	10	1.6L 411	
	8	23502-30000	WASHER-LOCK 5	16	10	UTK,1.6L 411	
	9	16341-10410	NUT-OIL CAP	2	2	UTK,1.6L 411	
	10	16342-10400	PACKING,18	2	5	UTK,1.6L 411	
	11	16343-12210	PLUNGER-OIL DAMPER	2	5	UTK,1.6L 411	
	12	16344-10400	WASHER-OIL DAMPER	2	10	UTK,1.6L 411	
	13	16345-10400	RING-C	2	5	UTK,1.6L 411	
	14	16346-10615	SPRING-SUCTION	2	5	UTK 411	
	15	16346-12210	SPRING-SUCTION	2	5	1.6L 411	
	16	16347-10400	PACKING-NYLON 12.5	2	10	UTK,1.6L 411	
	17	16324-10400	LIFTER-PISTON	2	4	UTK,1.6L 411	

Printed in Japan

REVISED: SEPTEMBER,1968

S	KEY NO.	PART NO.	PART NAME	Q'TY	SALES UNIT	MODEL	ICA
	18	16325-10400	SPRING-RETURN	2	10	UTK,1.6L 411	
	19	16326-10400	RING-E	4	5	UTK,1.6L 411	
	20	16354-16710	JET-NEEDLE	2	10	UTK 411	
	21	16354-15810	JET-NEEDLE(M-43)	2	10	1.6L 411	
	22	16219-10400	SCREW-SET,NEEDLE JET	2	10	UTK,1.6L 411	
	23	16335-14610	NOZZLE	2		UTK,1.6L 411	
	24	16351-10400	SLEEVE-NOZZLE	2	10	UTK,1.6L 411	
	25	16027-10400	SCREW-SET,NOZZLE SLEEVE	2	10	UTK,1.6L 411	
	26	16130-10400	WASHER 10	2	10	UTK,1.6L 411	
	27	16145-10400	SPRING-IDLE ADJUST SCREW	2	10	UTK,1.6L 411	
	28	16144-12210	NUT-IDLE ADJUST	2	10	UTK,1.6L 411	
	29	16122-12210	SHAFT-THROTTLE	2	5	UTK,1.6L 411	
	30	16120-10400	VALVE-THROTTLE	2	10	UTK,1.6L 411	
	31	16121-85060	SCREW-SET,VALVE	4	50	UTK,1.6L 411	
	32	16125-10400	COVER-FLOAT CHAMBER	2	1	UTK,1.6L 411	
◁	33	16125-10411	COVER-FLOAT CHAMBER	2		1.6L 411	Y
	34	16064-10400	GASKET-FLOAT CHAMBER COVER	2		UTK,1.6L 411	
	35	16061-10400	ASSY-FLOAT	2	4	UTK,1.6L 411	

Printed in Japan

REVISED: SEPTEMBER,1968

S	KEY NO.	PART NO.	PART NAME	Q'TY	SALES UNIT	MODEL	ICA
	36	16062-10400	LEVER-FLOAT	2	1	UTK,1.6l 4 11	
	37	16066-10400	SHAFT-FLOAT LEVER	2	10	UTK,1.6l 4 11	
	38	16101-10400	ASSY-VALVE,NEEDLE	2		UTK,1.6l 4 11	
	39	16094-10400	WASHER 10	2	10	UTK,1.6L 4 11	
	40	16111-10615	NIPPLE-FUEL FRONT	1	5	UTK 411	
	41	16111-12210	NIPPLE-FUEL FRONT	1		1.6L 411	
*	42	16112-10615	NIPPLE-FUEL REAR	1		UTK,1.6l 4 11	
	43	16336-15810	SCREW-SET,FUEL NIPPLE	1	10	UTK,1.6l 4 11	
*	44	16094-85060	PACKING 12	4		UTK,1.6L 4 11	
	45	16331-10400	SCREW-SET,NIPPLE	2	10	UTK,1.6l 4 11	
	46	16335-10400	PACKING 10	4		UTK,1.6l 4 11	
	47	16356-12210	PIPE-FUEL	2	5	UTK,1.6L 4 11	
	48	16357-12210	SLEEVE	2	1	UTK,1.6L 4 11	
	49	16359-12210	NUT-SLEEVE	2	1	UTK,1.6l 4 11	
*	50	16358-12210	CLIP	4	10	UTK,1.6L 4 11	
	51	16358-12211	CLIP	4	10	UTK,1.6L 4 11	Y
	52	16127-14610	PLATE-THROTTLE ADJUSTING	2	10	UTK,1.6l 4 11	
	53	16084-14610	WASHER 8	2	10	UTK,1.6L 4 11	

Printed in Japan

REVISED: SEPTEMBER,1968

S	KEY NO.	PART NO.	PART NAME	Q'TY	SALES UNIT	MODEL	ICA
*	54	16277-14610	LEVER-IDLE FIRST	2	5	UTK,1.6L 411	
	55	16277-14611	LEVER-IDLE FIRST	2	1	1.6L 411	Y
	56	16239-14610	SLEEVE(A)	2		UTK,1.6L 411	
	57	16134-16710	LEVER-THROTTLE	2	1	UTK 411	
	58	16134-15810	LEVER-THROTTLE	2	1	1.6L 411	
	59	23109-30000	WASHER-LOCK 8	2		UTK,1.6L 411	
	60	16124-85060	NUT 8	2	10	UTK,RL-UTK ,WRL-UAK 411	
	61	16193-10400	SPRING-ADJUSTING THROTTLE	2	10	UTK,1.6L 411	
	62	16114-10400	SCREW-ADJUSTING THROTTLE	2	10	UTK,1.6L 411	
	63	16190-10401	SPRING-STARTER	2	10	UTK,1.6L 411	
	64	16072-14610	WASHER 5	2	10	UTK,1.6L 411	
	65	16147-14611	PLATE-CONNECTING(B)	2	5	UTK,1.6L 411	
	66	16116-14610	SLEEVE(B)	2	10	UTK,1.6L 411	
	67	16157-14610	SPRING-CONNECTING	2	10	UTK,1.6L 411	
	68	16238-14610	LEVER-CHOKE	2	1	UTK,1.6L 411	
	69	16185-14610	BOLT 5	2		UTK,1.6L 411	
	70	16217-10401	WASHER 7	4	10	UTK,1.6L 411	
	71	16076-14610	WASHER-LOCK 7	2	10	UTK,1.6L 411	

Printed in Japan

REVISED: SEPTEMBER,1968

S	KEY NO.	PART NO.	PART NAME	Q'TY	SALES UNIT	MODEL	ICA
	72	16185-10400	BOLT 5	2	10	UTK,1.6L 4 11	
	73	16248-14610	ROD-CONNECTING	2	5	UTK,1.6L 4 11	
	74	16091-10560	PIN-COTTER	4	10	UTK,1.6L 4 11	
	75	16147-14610	PLATE-CONNECTING A	2	1	UTK,1.6L 4 11	
	76	22185-50000	WASHER 4	2	50	UTK,1.6L 4 11	
	77	16123-14610	SLEEVE	2	10	UTK,1.6L 4 11	
	78	22156-85060	WASHER-LOCK 4	2	10	UTK,1.6L 4 11	
	79	23552-09400	SCREW 4	2		UTK,1.6L 4 11	
	80	23109-30000	WASHER-LOCK	2		UTK,1.6L 4 11	
	81	16322-12210	BOLT 8	2	10	UTK,1.6L 4 11	
	82	16194-10615	SPRING-THROTTLE	2	5	UTK 411	
	83	16194-15810	SPRING-THROTTLE	2	10	1.6L 411	
	84	16020-12200	CONNECTOR-VACUUM TUBE	1	10	UTK,1.6L 4 11	
	85	16020-18810	CONNECTOR-VACUUM TUBE	1	10	UTK,1.6L 4 11	Y
	86	16031-16700	ASSY-TUBE,OVER FLOW,FRONT	1	1	UTK 411	
	87	16032-16700	ASSY-TUBE,OVER FLOW,REAR	1	10	UTK 411	
	88	16031-15800	ASSY-TUBE,OVER FLOW	2	10	1.6L 411	
	89	14012-10601	BRACKET-OVER FLOW TUBE	2	5	UTK 411	
	90	14012-10400	BRACKET-OVER FLOW TUBE	2		1.6L 411	

Printed in Japan

REVISED: SEPTEMBER,1968

S	KEY NO.	PART NO.	PART NAME	Q'TY	SALES UNIT	MODEL	ICA
	91	00214-51410	STUD(CARBURETOR TO AIR CLEANER)	2		UTK 411	
	92	18455-30000	RUBBER-FERRULE	2	50	1.6L 411	
	93	16182-65010	ASSY-DASH,POT	1	1	RL-UAK,WRL-UAK 411	
	94	16258-24500	BRACKET-DASH POT	1	1	RL-UAK,WRL-UAK 411	
#	95	X6010-14625	REPAIR KIT-A,CARBURETOR(INC.GASKETS AND PACKINGS)	1		1.6L 411	
#	96	X6010-14626	REPAIR KIT-B,CARBURETOR(INC.SCREWS,WASHERS AND CLIPS)	1		1.6L 411	
#	97	X6010-14628	REPAIR KIT-D,CARBURETOR(JET NEEDLES AND CONTROL VALVES)	1		1.6L 411	
	98	16361-16700	SHAFT-AUXILIARY,THROTTLE	1	1	UTK 411	
	99	16361-15800	ASSY-SHAFT,AUXILIARY THROTTLE	1	1	RL-UTK,WRL-UTK 411	
	100	16361-24500	ASSY-SHAFT,AUXILIARY THROTTLE	1		RL-UAK,WRL-UAK 411	
	101	16378-14600	SPRING-THROTTLE ADJUSTING	1	10	1.6L 411	
*	102	16379-14600	SCREW	1	10	1.6L 411	
	103	16379-14601	SCREW	1	10	1.6L 411	Y
	104	16380-15800	BOLT-BALL JOINT	2		1.6L 411	
	105	16380-18810	BOLT-BALL JOINT(FROM E/# R-40001)	2	1	1.6L 411	N
	106	00916-21800	WASHER-TOOTH LOCK	2		1.6L 411	
	107	16362-16700	ASSY-ARM,THROTTLE	1		UTK 411	
	108	16365-14600	ARM-THROTTLE SHAFT	2		UTK 411	
*	109	00915-11500	WASHER-LOCK	2	50	UTK,1.6L 411	

Printed in Japan

REVISED: SEPTEMBER,1968

S	KEY NO.	PART NO.	PART NAME	Q'TY	SALES UNIT	MODEL	ICA
*	110	00911-14500	NUT	2	100	UTK,1.6L 411	
*	111	00916-41000	WASHER	3		UTK,1.6L 411	
*	112	00334-02000	SCREW	2		UTK,1.6L 411	
	113	16370-15800	ASSY-ROD,CONNECTING(TO E/# R-40000)	2	5	UTK,1.6L 411	
	114	16370-18810	ASSY-ROD,CONNECTING(FROM E/# R-40001)	1		UTK,1.6L 411	N
	115	16373-15800	BUCKLE-TURN,CONNECTING ROD(TO E/# R-40000)	1		UTK,1.6L 411	
	116	16373-18810	BUCKLE-TURN,CONNECTING ROD(FROM E/# R-40001)	1	10	UTK,1.6L 411	N
	117	16374-14600	NUT-TURN BUCKLE(TO E/# R-40000)	1		UTK,1.6L 411	
	118	16374-18810	NUT-TURN BUCKLE(FROM E/# R-40001)	1	10	UTK,1.6L 411	N
	119	16375-14600	NUT-TURN BUCKLE(TO E/# R-40000)	1		UTK,1.6L 411	
	120	16375-18810	NUT-TURN BUCKLE(FROM E/# R-40001)	1	1	UTK,1.6L 411	N
	121	17524-15800	TUBE-FUEL,FRONT	1	5	1.6L 411	
	122	17525-15801	TUBE-FUEL,REAR	1	1	1.6L 411	
*	123	00721-11300	CLAMP-HOSE	4	50	1.6L 411	
	124	18116-15801	ASSY-LEVER,ACCELERATOR CROSS SHAFT	1	5	1.6L 411	
	125	00915-11610	WASHER-LOCK	1		1.6L 411	
	126	00911-14610	NUT	1		1.6L 411	
	127	18138-15801	SPRING-RETURN,ACCELERATOR	1	5	1.6L 411	
	128	18022-15800	ROD-CONNECTING,ACCELERATOR	1	10	1.6L 411	

Printed in Japan

REVISED: SEPTEMBER,1968

S	KEY NO.	PART NO.	PART NAME	Q'TY	SALES UNIT	MODEL	ICA
	129	18028-15800	RUBBER-DAMPER	1	10	1.6L 411	
	130	18027-15800	COLLAR-PIN,ACCELERATOR PEDAL ARM	1		1.6L 411	
	131	18243-61500	CLIP-PIN	1		1.6L 411	
	132	18028-61000	WASHER-ADJUSTING	1	1	1.6L 411	
	133	18223-73000	NUT-ADJUSTING	1	10	1.6L 411	
	134	18224-73000	NUT-HEX.LOCK	1	10	1.6L 411	
	135	00911-20810	NUT	1	50	1.6L 411	
	136	18222-15800	ASSY-JOINT,BALL A	1	5	1.6L 411	
	137	18300-15801	ASSY-CRANK,BELL A	1		1.6L 411	
	138	18124-73000	BUSH-NYLON	1	10	1.6L 411	
	139	18302-15801	BRACKET-BELL CRANK	1	5	1.6L 411	
	140	18137-10600	RING-SNAP,E TYPE	1	10	1.6L 411	
	141	00314-01210	SCREW-MACHINE	2	50	1.6L 411	
	142	00915-11010	WASHER-LOCK	2	100	1.6L 411	
	143	18303-15800	ASSY-JOINT,BALL B	1	10	1.6L 411	
	144	16371-14600	CUP-BALL JOINT	1		1.6L 411	
	145	16372-14600	CUP-BALL JOINT	1		1.6L 411	
	146	16373-73400	PIN-ARM THROTTLE CABLE T/C	1	10	RL-UAK,WRL -UAK 411	

Printed in Japan

REVISED: SEPTEMBER.1968

NOTE

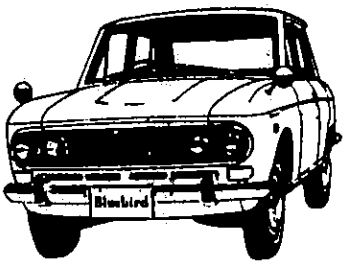

NOTE

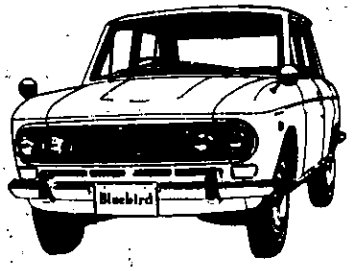

AIR CLEANER (EXC UTK & 1.6 L)

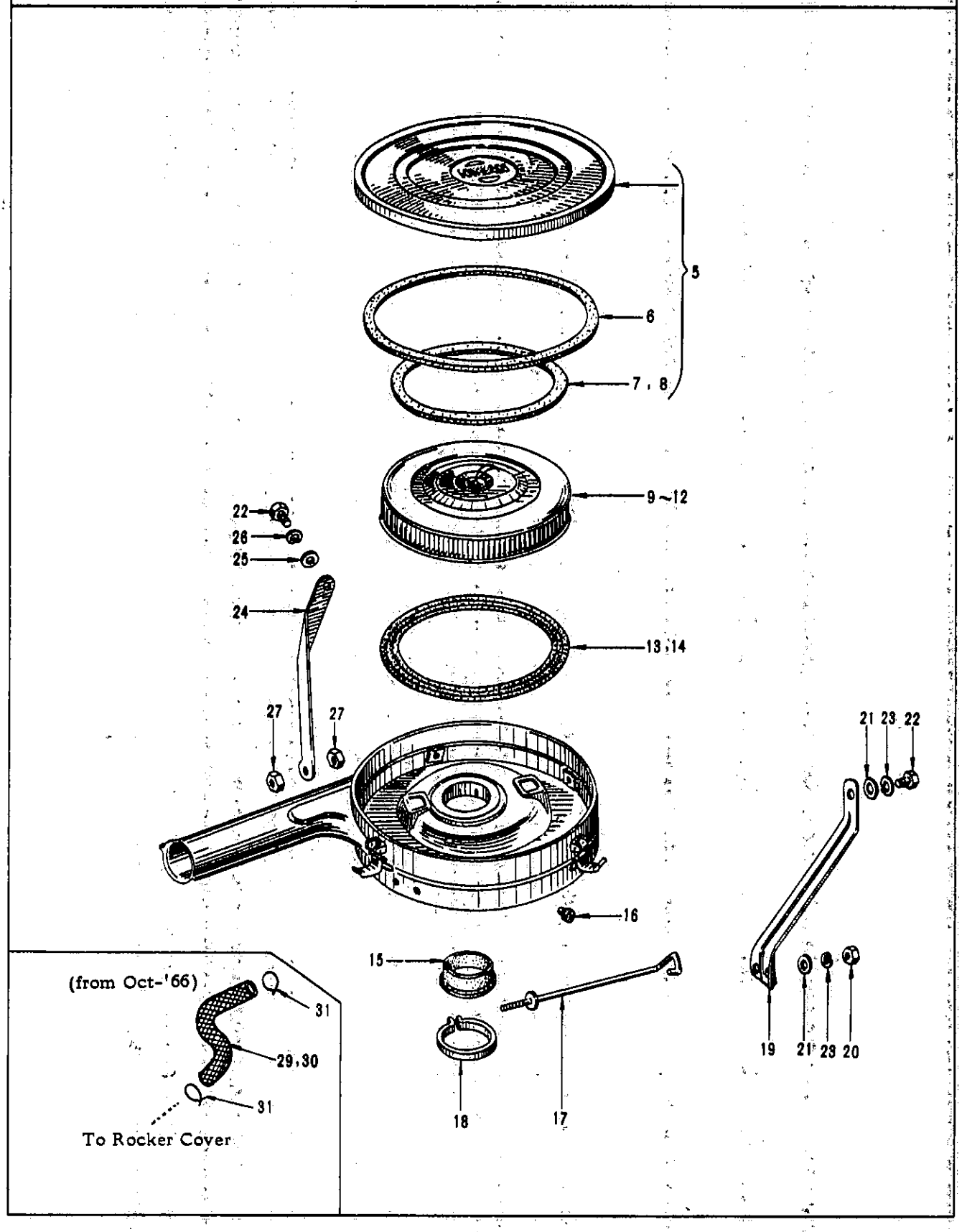

AIR CLEANER (EXC UTK & 1.6 L)

S	KEY NO.	PART NO.	PART NAME	Q'TY	SALES UNIT	MODEL	ICA
	1	16500-13200	ASSY-AIR CLEANER	1	1	1.3L 411(EXC.UTK,U.S.A.)	
	2	16500-24000	ASSY-AIR CLEANER(FROM 66-OCT.)	1	1	1.3L 411	C
	3	16500-14902	ASSY-AIR CLEANER	1	1	1.3L 411(U.S.A.ONLY)	
	4	16500-24000	ASSY-AIR CLEANER(FROM OCT.-66)	1	1	1.3L 411	C
*	5	16526-10800	ASSY-COVER,(CAUTION PLATE IS WRITTEN IN ENGLISH)	1	1	1.3L 411	
	6	16548-10600	PACKING	1	5	1.3L 411	
*	7	16536-36700	PACKING-UPPER(TO MAR-66)	1	1	1.3L 411	
	8	16536-73000	PACKING-UPPER,OIL PROOF(FROM APR.-66)	1	1	1.3L 411	Y
*	9	16546-10600	ASSY-ELEMENT,PAPER	1		1.3L 411(EXC.U.S.A.)	C
	10	16546-61800	ASSY-ELEMENT,VISCOUS PAPER(FROM C/#P411-061115,PL411-014512,WP411-811144,WPL411-804522)	1		1.3L 411	
	11	16546-10800	ASSY-ELEMENT,URETHANE	1		1.3L 411(U.S.A.)	
	12	16546-61800	ASSY-ELEMENT,VISCOUS PAPER(FROM C/#P411-061115,PL411-014512,WP411-811144,WPL411-804522)	1		1.3L 411	C
	13	16547-08000	PACKING-LOWER(TO SEP-66)	1	50	1.3L 411	
	14	16547-73000	PACKING-LOWER,OIL PROOF(FROM APR.-66)	1	10	1.3L 411	Y

Printed in Japan

REVISED: SEPTEMBER,1968

S	KEY NO.	PART NO.	PART NAME	Q'TY	SALES UNIT	MODEL	ICA
	15	16523-13200	INSULATOR	1	1	1.3L 411	
*	16	16533-36700	GROMMET	1		1.3L 411	
*	17	16561-13200	BOLT-BAND	1	10	1.3L 411	
	18	16560-13200	ASSY-BANK	1		1.3L 411	
	19	16573-13200	SUPPORT(AIR CLEANER TO INTAKE MANIFOLD)	1	1	1.3L 411	
	20	00911-14410	NUT TO FIX SUPPORT TO INTAKE MANIFOLD	2		1.3L 411	
	21	00915-41410	WASHER-PLAIN TO FIX SUPPORT TO INTAKE MANIFOLD	4		1.3L 411	
	22	00114-41210	BOLT TO FIX SUPPORT TO INTAKE MANIFOLD	2		1.3L 411	
	23	00915-11410	WASHER-LOCK TO FIX SUPPORT TO INTAKE MANIFOLD	4		1.3L 411	
	24	16574-13200	SUPPORT-AIR CLEANER,REAR	1	1	1.3L 411	
	25	00915-41510	WASHER-PLAIN TO FIX SUPPORT TO INTAKE MANIFOLD	1		1.3L 411	
	26	00915-11510	WASHER-LOCK TO FIX SUPPORT TO INTAKE MANIFOLD	1		1.3L 411	
	27	00911-14510	NUT TO FIX SUPPORT TO INTAKE MANIFOLD	2		1.3L 411	
	28	00114-41210	BOLT	1		1.3L 411	
	29	16571-13900	HOSE(TO SEP-66)	1	5	1.3L 411(U.S.A.)	
	30	16571-24000	HOSE-ROCKER COVER TO AIR CLEANER(FROM OCT.-66)	1	10	1.3L 411	N
	31	16572-10801	CLAMP-HOSE(FROM OCT.-66)	2		1.3L 411	

Printed in Japan

REVISED: SEPTEMBER,1968

NOTE

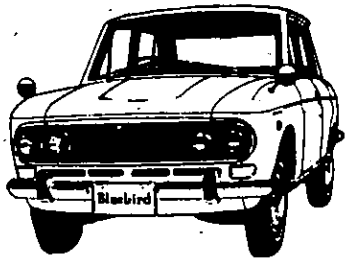

AIR CLEANER (UTK & 1.6 L)

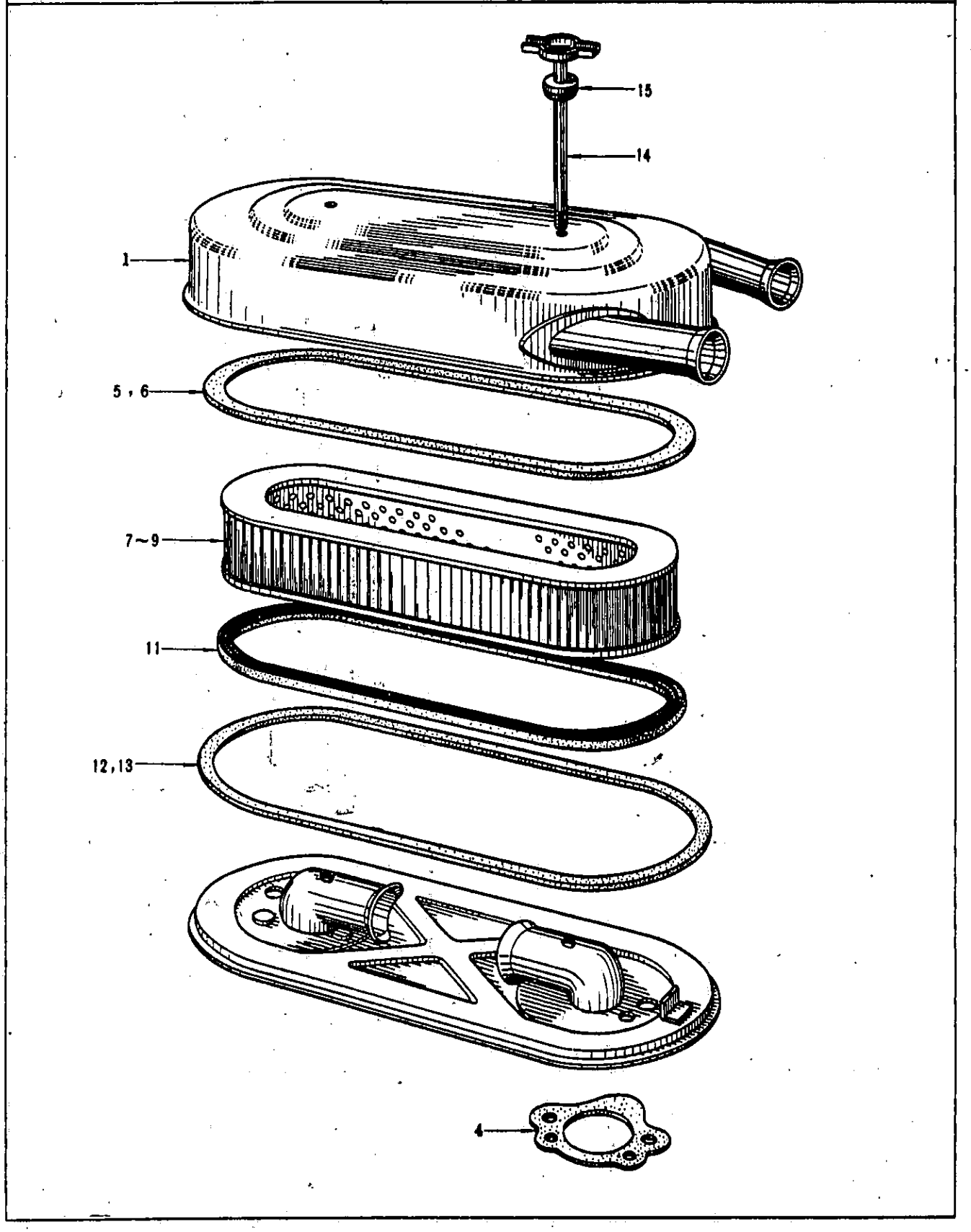

S	KEY NO.	PART NO.	PART NAME	Q'TY	SALES UNIT	MODEL	ICA
			AIR CLEANER (UTK & 1.6 L)				
*	1	16500-10612	ASSY-AIR CLEANER	1	1	411 UTK	
	2	16500-10613	ASSY-AIR CLEANER(TO SEP-66)	1	1	411 UTK	Y
	3	16500-19400	ASSY-AIR CLEANER(FROM OCT.-66)	1	1	411 UTK	N
	4	16500-15800	ASSY-AIR CLEANER	1	1	1.6L 411	
	5	16547-10612	PACKING	1	10	UTK 411	
	6	16536-16300	PACKING	2	5	1.6L 411	
*	7	16546-10611	ASSY-ELEMENT,PAPER	1		UTK 411	
	8	16546-10613	ASSY-ELEMENT,PAPER	1	10	UTK 411	Y
	9	16546-16300	ASSY-ELEMENT,PAPER	1		1.6L 411	
	10	16523-12200	GASKET TO CARBURETOR	2	1	UTK,1.6L 411	
	11	16547-10612	PACKING	1	10	UTK 411	
	12	16548-10612	PACKING	1	1	UTK 411	
	13	16548-16300	PACKING	1	5	1.6L 411	
	14	16516-10612	ASSY-BOLT,CENTER	2	5	UTK 411	
	15	16568-37500	PACKING	2	100	UTK 411	
	16	16555-37500	RETAINER	2	10	UTK 411	
	17	00369-51610	BOLT	2	50	UTK 411	
	18	00916-21510	WASHER-LOCK	2	50	UTK 411	
	19	00114-51610	BOLT TO FIX AIR CLEANER TO CARBURETOR	4		1.6L 411	
	20	00915-11510	WASHER-LOCK TO FIX AIR CLEANER TO CARBURETOR	4		1.6L 411	

Printed in Japan

REVISED: SEPTEMBER,1968

S	KEY NO.	PART NO.	PART NAME	Q'TY	SALES UNIT	MODEL	ICA
	21	16571-15800	HOSE-ROCKER COVER TO A IR CLEANER	1		1.6L 411	
	22	16571-19400	HOSE-ROCKER COVER TO A IR CLEANER(FROM OCT.-66)	1	5	UTK 411	
	23	16572-10801	CLAMP-HOSE(FROM OCT.-66)	2		UTK,1.6L 411	
	24	16523-73400	GASKET-FLANGE	2	1	RL-UAK,WRL-UAK 411	

Printed in Japan

REVISED: SEPTEMBER,1968

NOTE

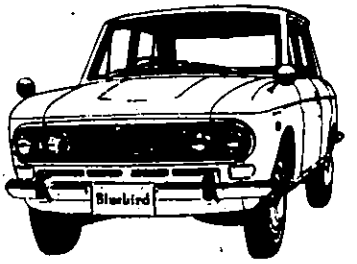

FUEL PUMP

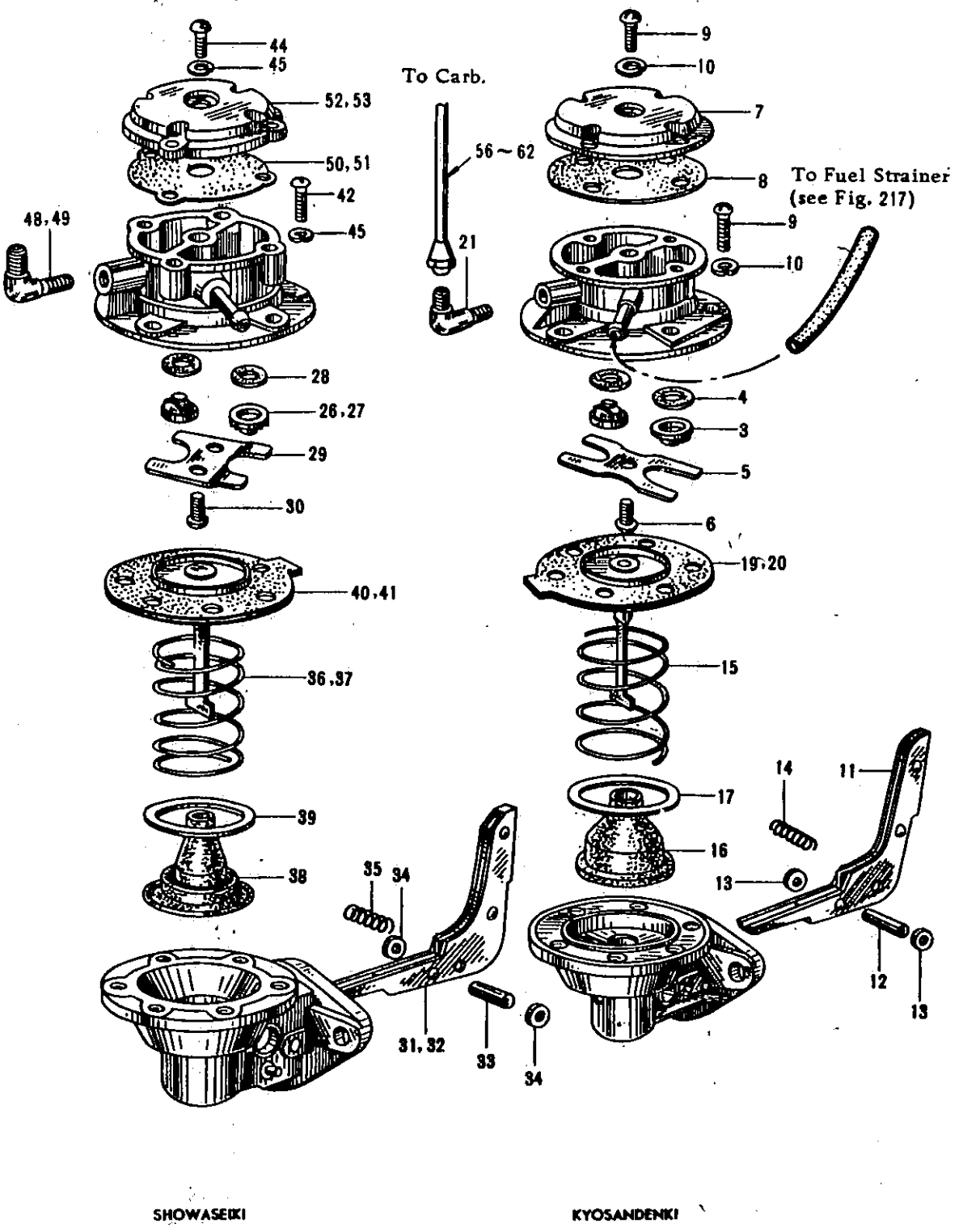
44
45
52, 53
50, 51
42
45
48, 49
28
26, 27
29
30
40, 41
36, 37
39
38
35
34
31, 32
33
34
To Carb.
56 ~ 62
21
9
10
7
8
To Fuel Strainer
(see Fig. 217)
9
10
4
3
5
6
19, 20
15
17
16
14
11
13
12
13
SHOWASEIKI
KYOSANDENKI

S	KEY NO.	PART NO.	PART NAME	Q'TY	SALES UNIT	MODEL	ICA
			FUEL PUMP				
*	1	17010-13201	ASSY-PUMP,FUEL(KYOSAN)	1	1	1.3L 411(EXC.UTK)	
	2	17010-13900	ASSY-PUMP,FUEL(KYOSAN)	1	1	1.3L 411(EXC.UTK)	Y
	3	17065-13210	ASSY-VALVE,FUEL PUMP	2	10	1.3L 411	
	4	17061-50000	GASKET-VALVE	2	10	1.3L 411	
	5	17072-32200	RETAINER-VALVE	1	10	1.3L 411	
*	6	17075-13200	SCREW-RETAINER	1	10	1.3L 411	
	7	17082-13211	CAP-FUEL PUMP	1	1	1.3L 411	
	8	17076-13211	GASKET-CAP,FUEL PUMP	1	10	1.3L 411	
	9	17089-13210	SCREW-BODY SET	11	10	1.3L 411	
	10	17090-32200	WASHER-LOCK	11	10	1.3L 411	
	11	17015-13211	ASSY-ARM,ROCKER	1	5	1.3L 411	
*	12	17019-85060	PIN-ROCKER ARM	1	10	1.3L 411	
	13	17016-00100	SPACER-SIDE ROCKER ARM	2	10	1.3L 411	
	14	17020-85060	SPRING-ROCKER ARM	1	10	1.3L 411	
	15	17052-37010	SPRING-DIAPHRAGM	1		1.3L 411	
	16	17048-13910	GASKET-LOWER BODY	1		1.3L 411	
	17	17047-50000	RETAINER-LOWER BODY	1		1.3L 411	
*	18	17053-13910	COMP-DIAPHRAGM	1	2	1.3L 411	
*	19	17053-32200	ASSY-DIAPHRAGM	1	2	1.3L 411	Y
	20	17053-32201	ASSY-DIAPHRAGM	1	2	1.3L 411	
	21	17103-50000	ELBOW-CONNECTOR	1		1.3L 411	
	22	17010-13900	ASSY-PUMP,FUEL(SHOWA)	1	1	1.3L 411(EXC.UTK)	

Printed in Japan

REVISED: SEPTEMBER,1968

S	KEY NO.	PART NO.	PART NAME	Q'TY	SALES UNIT	MODEL	ICA
	23	17010-17300	ASSY-PUMP,FUEL(SHOWA)	1	1	UTK 411	
	24	17010-12201	ASSY-PUMP,FUEL(SHOWA)(TO E/# R-40000)	1		1.6L 411	
	25	17010-18810	ASSY-PUMP,FUEL(SHOWA)(FROM E/# R-40001)	1	1	1.6L 411	N
	26	17065-58000	ASSY-VALVE,FUEL PUMP	2	10	411	
	27	17065-18000	ASSY-VALVE,FUEL PUMP	2	10	411	Y
	28	17061-50000	ASSY-PACKING,VALVE	2	10	411	
	29	17072-01300	RETAINER-VALVE	1	10	411	
	30	17075-30100	SCREW-RETAINER	2	50	411	
	31	17015-13900	ASSY-ARM,ROCKER	1	1	1.3L 411	
	32	17015-32200	ASSY-ARM,ROCKER	1	10	1.6L 411	
	33	17019-50000	PIN-ARM ROCKER	1	10	411	
	34	17016-00100	SPACER-SIDE ROCKER ARM	2	10	411	
	35	17020-00100	SPRING-ROCKER ARM	1	10	411	
	36	17052-30100	SPRING-DIAPHRAGM	1		1.3L 411	
	37	17051-32200	SPRING-DIAPHRAGM	1	5	1.6L 411	
*	38	17048-38700	SEAL-LOWER BODY	1	10	411	
*	39	17047-38700	WASHER-SEAL,LOWER BODY	1	10	411	
*	40	17053-32200	ASSY-DIAPHRAGM	1	2	411	
	41	17053-32201	ASSY-DIAPHRAGM	1	2	411	Y
	42	17089-58000	SCREW-BODY SET	6	10	1.3L 411	
	43	17089-58000	SCREW-BODY SET	11	10	1.6L 411	
	44	17089-13900	SCREW-CAP,FUEL PUMP	5	10	1.3L 411	
	45	17090-50000	WASHER	11	10	411	
	46	17103-85060	CONNECTOR(TO E/# R-400 00)	1	5	1.6L 411	

Printed in Japan

REVISED: SEPTEMBER,1968

S	KEY NO.	PART NO.	PART NAME	Q'TY	SALES UNIT	MODEL	ICA
	47	17103-18810	CONNECTOR(FROM E/# R-40001)	1	10	1.6L 411	N
	48	17103-50000	ELBOW	1		1.3L 411(EXC.UTK)	
	49	17103-12200	ELBOW	1		1.6L UTK 411	
	50	17076-13900	PACKING-CAP,FUEL PUMP	1	10	1.3L 411	
	51	17076-61002	PACKING-CAP	1	10	1.6L 411	
	52	17082-13900	CAP-FUEL PUMP	1	1	1.3L 411	
	53	17082-61000	CAP-FUEL PUMP	1	1	1.6L 411	
*	54	17097-13200	ASSY-PLATE,HEAT SHIELD	1	1	1.3L 411	
*	55	16420-72600	SPACER-FUEL PUMP TO CYLINDER BLOCK	1	1	1.6L 411	
*	56	17099-72600	PACKING-FUEL PUMP	2	10	1.6L 411	
	57	17522-13201	ASSY-TUBE,FUEL PUMP TO NIKKI S CARBURETOR(TO SEP.-66)	1		1.3L 411(EXC.UTK)	
	58	17522-24000	ASSY-TUBE,FUEL PUMP TO NIKKI S CARBURETOR(FROM OCT.-66)	1		1.3L 411(EXC.UTK)	N
	59	17522-15801	ASSY-TUBE,FUEL PUMP TO CARBURETOR(TO E/# R-40000)	1		1.6L 411	
	60	17522-18811	ASSY-TUBE,FUEL PUMP TO CARBURETOR(FROM E/# R-40001)	1		1.6L 411	N
	61	17522-16701	TUBE-FUEL PUMP TO CARBURETOR(RUBBER)	1	5	UTK 411	
	62	17525-10605	TUBE-CARBURETOR TO CARBURETOR(RUBBER)(TO SEP-66)	1	10	UTK 411	
	63	17525-16700	TUBE-CARBURETOR TO CARBURETOR(RUBBER)(FROM OCT.-66)	1		UTK 411	Y

REVISED: SEPTEMBER.1968

Printed in Japan

S	KEY NO.	PART NO.	PART NAME	Q'TY	SALES UNIT	MODEL	ICA
	64	17524-15800	HOSE-RUBBER,CARBURETOR ,FRONT	1	5	1.6L 411	
	65	17525-15801	HOSE-RUBBER,CARBURETOR ,REAR	1	1	1.6L 411	
	66	17007-14602	STAY-TUBE,PUMP TO CARB URETOR	1		1.6L 411	
*	67	00721-11300	CLAMP-HOSE	4	50	UTK,1.6L 411	
	68	17106-14601	CLAMP-TUBE,PUMP TO CAR BURETOR(TO E/# R-40000)	1	5	1.6L 411	
	69	17106-18810	CLAMP-TUBE,PUMP TO CAR BURETOR(FROM E/# R-400 01)	1	5	1.6L 411	N
	70	00314-01410	SCREW	1	50	1.6L 411	
	71	00915-11010	WASHER-LOCK	1	100	1.6L 411	
	72	00915-41010	WASHER-PLAIN	1		1.6L 411	
	73	17107-12200	CLAMP-FUEL TUBE(FIXING TIMING COVER)	1	10	1.6L 411	
	74	00111-51200	BOLT FIXING TUBE CLAMP	2		1.6L 411	
	75	00915-11510	WASHER-LOCK FIXING TUB E CLAMP	2		1.6L 411	
#	76	X7010-13925	REPAIR KIT,FUEL PUMP(S HOWA)(INC.18,19,20,26, 27,29,34)	1		1.3L 411	
#	77	X7010-13926	REPAIR KIT,FUEL PUMP(K YOSAN)(INC.1,2,3,6,13, 14,16)	1		1.3L 411	
#	78	X7010-12225	REPAIR KIT,FUEL PUMP(S HOWA)(INC.18,19,20,26, 27,29,34)	1		1.6L 411	

Printed in Japan

REVISED: SEPTEMBER,1968

NOTE

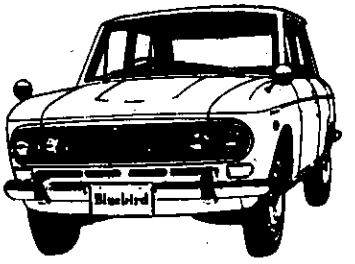

FUEL STRAINER

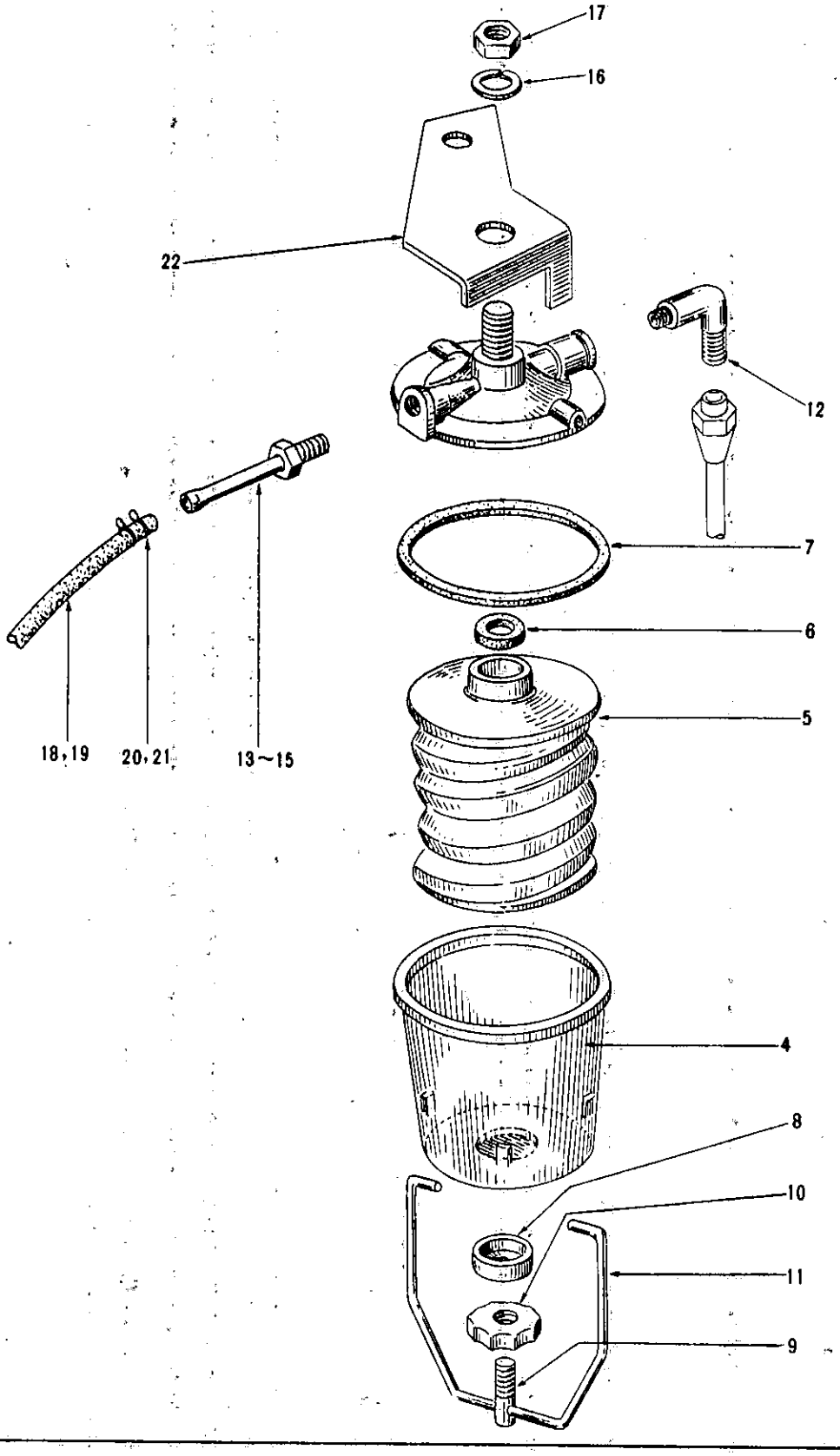

S	KEY NO.	PART NO.	PART NAME	Q'TY	SALES UNIT	MODEL	ICA
			FUEL STRAINER				
*	1	16400-10600	ASSY-STRAINER,FUEL	1		411(EXC.UTK)	
*	2	16400-10601	ASSY-STRAINER,FUEL	1	1	UTK 411	
	3	16400-10602	ASSY-STRAINER,FUEL	1	1	UTK 411	Y
	4	16402-50000	GLASS-FUEL STRAINER	1	1	411	
	5	16403-50000	ASSY-ELEMENT,FILTER	1	1	411	
	6	16406-50000	PACKING-FILTER ELEMENT	1	50	411	
	7	16407-87260	PACKING-FUEL STRAINER	1	10	411	
	8	16408-85060	WASHER-FUEL STRAINER	1	10	411	
	9	16409-85060	BOLT-FUEL STRAINER	1		411	
*	10	16410-85060	NUT-FUEL STRAINER	1		411	
	11	16411-87261	WIRE-FUEL STRAINER	1	5	411	
	12	15233-85160	ELBOW-INLET	1	10	411	
	13	17103-01300	CONNECTOR-STRAINER TO FUEL PUMP	1	5	411(EXC.UTK)	
	14	17103-10601	CONNECTOR-STRAINER TO FUEL PUMP	1	10	UTK 411	
	15	17103-12200	CONNECTOR-STRAINER TO FUEL PUMP	1		UTK 411	N
	16	00915-11610	WASHER-LOCK TO FIX STRAINER TO BRACKET	1		411	
	17	00911-14610	NUT TO FIX STRAINER TO BRACKET	1		411	
*	18	17518-10600	TUBE-FLEXIBLE(STRAINER TO PUMP)	1	5	1.3L 411	
	19	17518-15801	TUBE-FLEXIBLE(STRAINER TO PUMP)	1		1.6L 411	

Printed in Japan

REVISED: SEPTEMBER,1968

S	KEY NO.	PART NO.	PART NAME	Q'TY	SALES UNIT	MODEL	ICA
	20	16439-04101	CLAMP-FLEXIBLE TUBE	2	10	1.3L 411	
	21	00721-11310	CLAMP-FLEXIBLE TUBE	2		1.6L 411	
	22	16419-10601	BRACKET-FUEL STRAINER	1	1	411	

Printed in Japan

NOTE

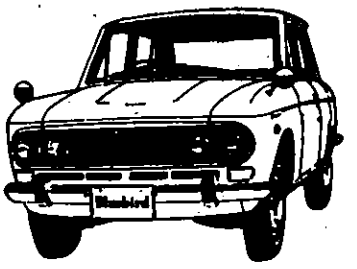

FUEL TANK

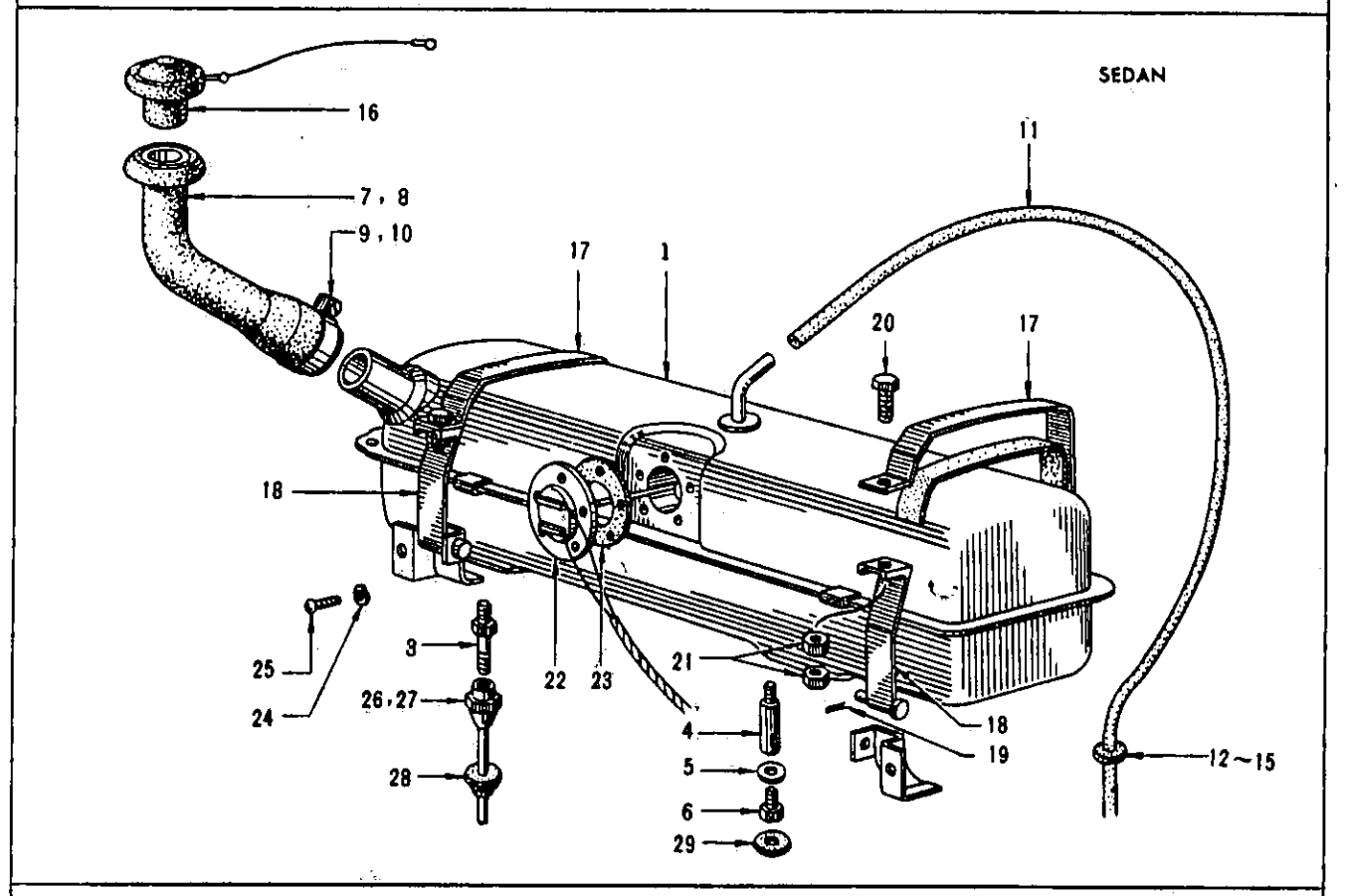
SEDAN
16
7, 8
9, 10
17
1
11
20
17
18
25
24
3
26, 27
28
22
23
21
4
5
6
29
18
19
12~15

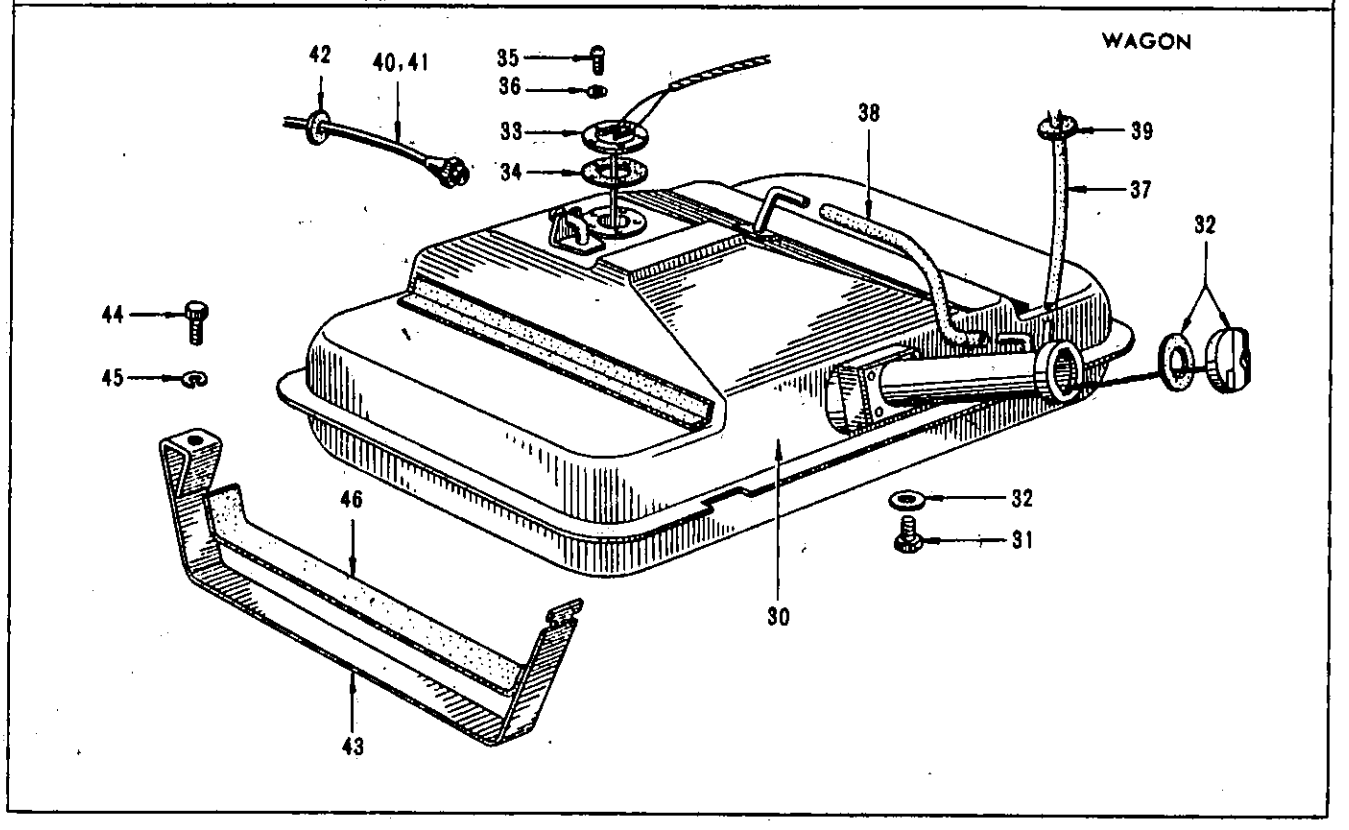
WAGON
42
40, 41
35
36
33
34
38
39
37
32
44
45
46
32
31
30
43

S	KEY NO.	PART NO.	PART NAME	Q'TY	SALES UNIT	MODEL	ICA
			FUEL TANK				
*	1	17201-10600	ASSY-TANK,FUEL	1	1	SEDAN 411	
	2	17201-10650	ASSY-TANK,FUEL	1		SEDAN 411	Y
	3	17103-10600	CONNECTOR-STRAIGHT	1	10	SEDAN 411	
	4	17311-09400	TUBE-DRAIN,FUEL TANK	1		SEDAN 411	
	5	17301-09400	WASHER-DRAIN PLUG	1	10	SEDAN 411	
	6	00931-42610	PLUG	1	50	SEDAN 411	
*	7	17213-10600	TUBE-FILLER,FUEL TANK, UPPER	1	1	SEDAN 411	
	8	17213-24000	TUBE-FILLER,FUEL TANK, UPPER	1	1	SEDAN 411	Y
	9	00721-16400	CLAMP-RUBBER HOSE,FUEL TANK	1		SEDAN 411	
	10	08721-16700	CLAMP-RUBBER HOSE,FUEL TANK	1		SEDAN 411	Y
	11	17232-10600	TUBE-BREATHER,FUEL TANK UPPER	1		SEDAN 411	
*	12	24051-02700	GROMMET	1	50	SEDAN 411	
	13	24250-89915	GROMMET-RUBBER	1	10	SEDAN 411	C
	14	24253-10600	GROMMET-RUBBER	1	10	SEDAN 411	
	15	24250-89915	GROMMET-RUBBER	1	10	SEDAN 411	C
	16	17251-10601	ASSY-CAP,FILLER TANK	1		SEDAN 411	
	17	17410-10600	ASSY-BAND,FUEL TANK,FRONT	2	2	SEDAN 411	
	18	17412-10600	ASSY-BAND,FUEL TANK,REAR	2	1	SEDAN 411	
	19	00921-01210	PIN-COTTER	2		SEDAN 411	
	20	00114-43210	BOLT	2	25	SEDAN 411	

S	KEY NO.	PART NO.	PART NAME	QTY	SALES UNIT	MODEL	ICA
	21	00911-34410	NUT	4		SEDAN 411	
	22	25060-13200	ASSY-GAUGE,TANK UNIT	1		SEDAN 411	
*	23	17293-04100	GASKET-GAUGE TO TANK	1	5	SEDAN 411	
	24	00915-10810	WASHER-LOCK TO FIX GAUGE	5		SEDAN 411	
	25	00310-80810	SCREW TO FIX GAUGE	5	50	SEDAN 411	
	26	17501-10601	ASSY-TUBE(FUEL TANK TO STRAINER)	1	1	1.3L SEDAN 411	
	27	17501-15801	ASSY-TUBE(FUEL TANK TO STRAINER)	1	1	1.6L SEDAN 411	
	28	17544-04100	GROMMET	1	1	SEDAN 411	
	29	17543-10600	GROMMET	1		SEDAN 411	
	30	17201-10901	ASSY-TANK,FUEL	1	1	WAGON 411	
	31	17541-30000	WASHER-JOINT	1	10	WAGON 411	
*	32	17251-10900	ASSY-CAP,FILLER	1	10	WAGON 411	
	33	17291-13400	ASSY-GAUGE,FUEL	1	1	WAGON 411	
	34	17293-10900	GASKET-FUEL TANK GAUGE TO TANK	1	10	WAGON 411	
	35	00310-80810	SCREW TO FIX GAUGE TO TANK	5	50	WAGON 411	
	36	00915-10810	WASHER-PLAIN TO FIX GAUGE TO TANK	5		WAGON 411	
	37	17232-10900	TUBE-VENTILETION D	1	1	WAGON 411	
	38	17234-10900	TUBE-VENTILATION E	1	1	WAGON 411	
	39	00951-21000	GROMMET-RUBBER	2		WAGON 411	
	40	17501-10901	ASSY-TUBE,FUEL TANK TO STRAINER	1	1	1.3L WAGON 411	
	41	17501-24600	ASSY-TUBE,FUEL TANK TO STRAINER	1		1.6L WAGON 411	
	42	17543-10600	GROMMET-RUBBER(TYPE 6)	1		WAGON 411	

Printed in Japan

REVISED: SEPTEMBER,1968

S	KEY NO.	PART NO.	PART NAME	Q'TY	SALES UNIT	MODEL	ICA
	43	17410-10900	ASSY-BAND,FUEL TANK	2	1	WAGON 411	
	44	00114-52510	BOLT	2	50	WAGON 411	
	45	00915-11510	WASHER-LOCK	2		WAGON 411	
	46	17416-10900	SHIM	2	5	WAGON 411	

REVISED: SEPTEMBER,1968

Printed in Japan

NOTE

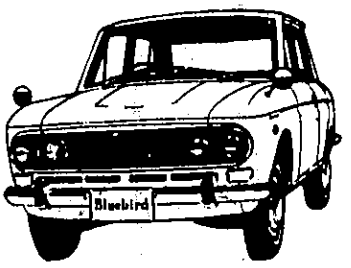

NOTE

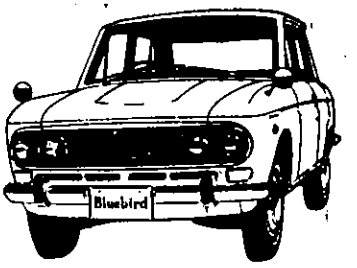

ACCELERATOR (1.3 L EXC UTK)

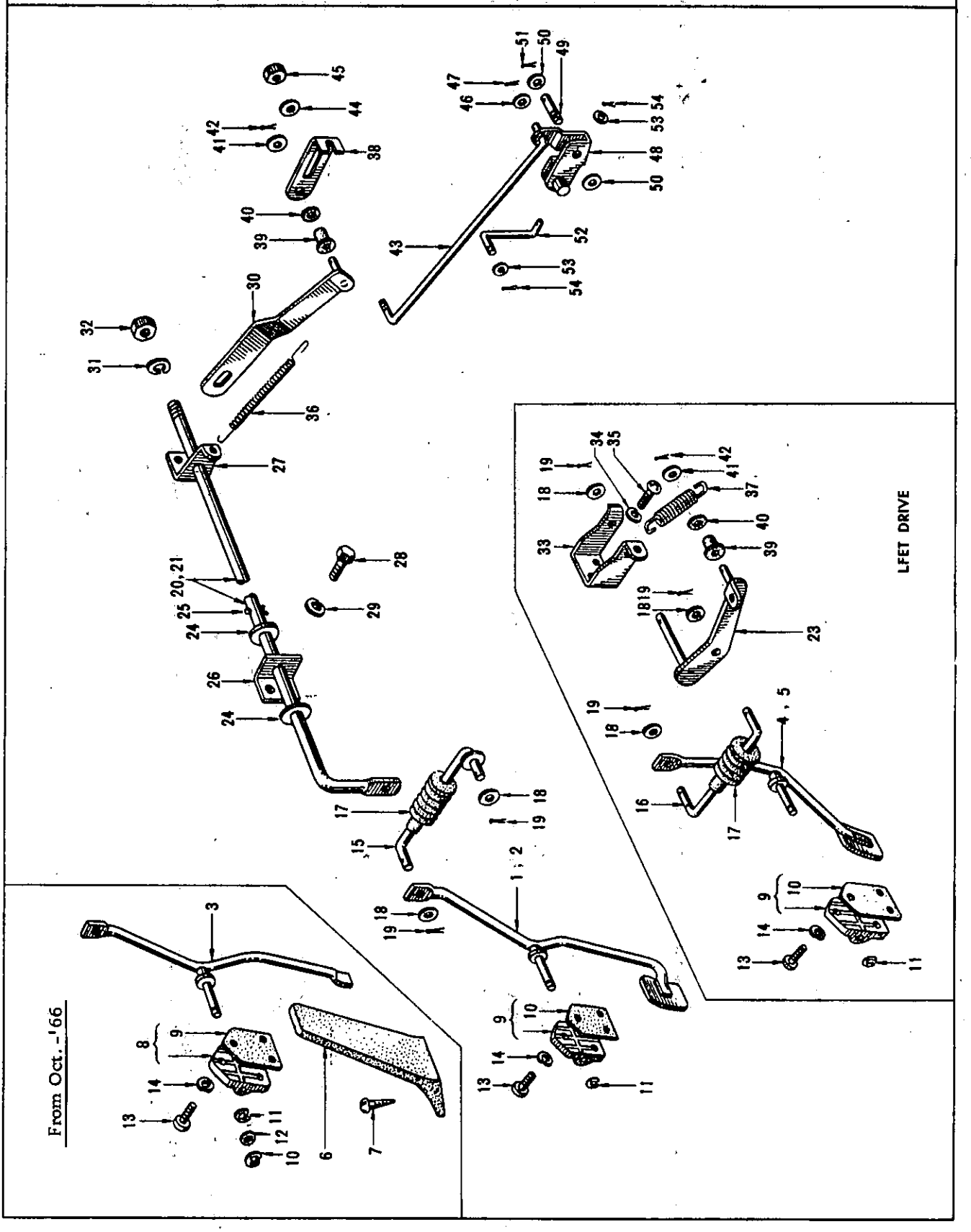

S	KEY NO.	PART NO.	PART NAME	Q'TY	SALES UNIT	MODEL	ICA
			ACCELERATOR (1.3 L EXC UTK)				
*	1	18010-10601	ASSY-PEDAL,ACCELERATOR	1		R DRIVE 411(EXC.UTK)	
	2	18010-16500	ASSY-PEDAL,ACCLERATOR(TO SEP.-66)	1	1	R DRIVE 411(EXC.UTK)	Y
	3	18010-20201	ASSY-PEDAL,ACCELERATOR (FROM OCT.-66)	1	1	R DRIVE 411(EXC.UTK)	N
*	4	18010-10800	ASSY-PEDAL,ACCELERATOR (TO SEP.-66)	1	1	L DRIVE 411	
	5	18010-24501	ASSY-PEDAL,ACCELERATOR (FROM OCT.-66)	1	1	L DRIVE 411(EXC.1.6L)	N
*	6	18110-73001	ASSY-FOOT REST,ACCELERATOR(FROM OCT.-66)	1		411	
	7	00511-01610	SCREW-TAPPING TO FIX FOOT REST TO FLOOR(FROM OCT.-66)	2	50	411	
*	8	18020-10601	ASSY-BRACKET,ACCELERATOR PEDAL	1	1	1.3L 411(EXC.UTK)	
	9	18019-10600	PACKING-PEDAL BRACKET	1	10	1.3L 411(EXC.UTK)	
	10	18137-10600	RING-SNAP,E TYPE	1	10	1.3L 411(EXC.UTK)	
	11	18014-15800	WASHER-SPRING(FROM OCT.-66)	1	1	1.3L 411(EXC.UTK)	
	12	18019-15800	WASHER-PLAIN(FROM OCT.-66)	1		1.3L 411(EXC.UTK)	
	13	00314-01210	SCREW TO FIX PEDAL BRACKET TO DASH LOWER	3	50	1.3L 411(EXC.UTK)	
	14	00915-11010	WASHER-LOCK TO FIX PEDAL BRACKET TO DASH LOWER	3	100	1.3L 411(EXC..UTK)	

Printed in Japan

REVISED: SEPTEMBER,1968

S	KEY NO.	PART NO.	PART NAME	Q'TY	SALES UNIT	MODEL	ICA
	15	18141-10601	ROD-ACCELERATOR PEDAL TO CROSS SHAFT	1		1.3L R DRIVE 411(EXC.UTK)	
	16	18141-10800	ROD-ACCELERATOR PEDAL TO LEVER	1	5	1.3L L DRIVE 411	
	17	18043-61000	BOOT-ACCELERATOR ROD	1	5	1.3L 411(EXC.UTK)	
	18	00915-41410	WASHER-PLAIN	2		1.3L 411(EXC.UTK)	
	19	00921-11510	PIN-COTTER	2		1.3L 411(EXC.UTK)	
	20	18100-10601	ASSY-SHAFT,CROSS,ACCELERATOR	1		1.3L R DRIVE 411(EXC.UTK)	
	21	18101-16500	ASSY-SHAFT,CROSS,ACCELERATOR	1	5	1.3L R DRIVE 411(EXC.UTK)	C
	22	18125-16500	RING-E	1	10	1.3L R DRIVE 411(EXC.UTK)	
	23	18100-10800	ASSY-LEVER,ACCELERATOR	1	1	1.3L L DRIVE 411	
	24	18126-61000	WASHER-CROSS SHAFT	2	1	1.3L 411(EXC.UTK)	
	25	00921-21810	PIN-COTTER	1		1.3L R DRIVE 411(EXC.UTK)	
	26	18127-61000	BRACKET-ACCELERATOR CROSS SHAFT	1	10	1.3L R DRIVE 411(EXC.UTK)	
	27	18129-10600	BRACKET-ACCELETATOR CROSS SHAFT	1	1	1.3L R DRIVE 411(EXC.UTK)	
	28	00369-01210	SCREW TO FIX BRACKET	4	50	1.3L R DRIVE 411(EXC.UTK)	

Printed in Japan

REVISED: SEPTEMBER,1968

S	KEY NO.	PART NO.	PART NAME	Q'TY	SALES UNIT	MODEL	ICA
	29	00915-11010	WASHER-LOCK TO FIX BRACKET	4	100	1.3L R DRIVE 411(EXC.UTK)	
	30	18116-10600	ASSY-LEVER,CROSS SHAFT,ACCELERATOR	1		1.3L R DRIVE 411(EXC.UTK)	
	31	00915-11610	WASHER-LOCK	1		1.3L R DRIVE 411(EXC.UTK)	
	32	00911-14610	NUT	1		1.3L R DRIVE 411(EXC.UTK)	
	33	18128-10800	BRACKET-ACCELERATOR LEVER SHAFT	1		1.3L L DRIVE 411	
	34	00915-11010	WASHER-LOCK TO FIX BRACKET	2	100	1.3L L DRIVE 411	
	35	00369-01210	SCREW TO FIX BRACKET	2	50	1.3L L DRIVE 411	
	36	18138-10602	SPRING-RETURN,ACCELERATOR	1	5	1.3L R DRIVE 411(EXC.UTK)	
	37	18138-10800	SPRING-RETURN,ACCELERATOR	1	5	1.3L L DRIVE 411	
	38	18022-10600	PLATE-ADJUSTING(CROSS SHAFT TO ROD)	1	1	1.3L 411(EXC.UTK)	
	39	18023-61000	BUSHING-RUBBER,ADJUSTING ROD	1	10	1.3L 411(EXC.UTK)	
	40	18027-61000	COLLAR-ADJUSTING PLATE (NYLON)	1	10	1.3L 411(EXC.UTK)	
	41	18028-61000	WASHER-ADJUSTING PLATE	1	1	1.3L 411(EXC.UTK)	
	42	00921-11510	PIN-COTTER	1		1.3L 411(EXC.UTK)	
	43	18142-10601	ROD(CROSS SHAFT TO BELL CRANK)	1		1.3L 411(EXC.UTK)	
	44	00916-31410	WASHER-TOOTH LOCK	1	50	1.3L 411(EXC.UTK)	

Printed in Japan

REVISED: SEPTEMBER,1968

S	KEY NO.	PART NO.	PART NAME	Q'TY	SALES UNIT	MODEL	ICA
	45	00911-14410	NUT	1		1.3L 411(EXC.UTK)	
	46	00915-41410	WASHER-PLAIN	1		1.3L 411(EXC.UTK)	
	47	00921-11510	PIN-COTTER	1		1.3L 411(EXC.UTK)	
	48	18146-10601	CRANK-BELL,THROTTLE CONTROL	1	1	1.3L 411(EXC.UTK)	
	49	18150-10601	SHAFT-BELL CRANK	1	5	1.3L 411(EXC.UTK)	
	50	18151-10600	WASHER-PLAIN	1	50	1.3L 411(EXC.UTK)	
	51	00921-22010	PIN-COTTER	1		1.3L 411(EXC.UTK)	
	52	18170-10602	ROD(BELL CRANK TO THROTTLE LEVER)	1	5	1.3L 411(EXC.UTK)	
	53	00915-40810	WASHER-PLAIN	2		1.3L 411(EXC.UTK)	
	54	00921-01010	PIN-COTTER	2		1.3L 411(EXC.UTK)	
	55	18410-13200	ASSY-WIRE,CHOKE CONTROL	1	2	1.3L 411(EXC.UTK)	
	56	18415-13200	ASSY-KNOB,CHOKE CONTROL	1	10	1.3L 411(EXC.UTK)	
	57	24256-36700	GROMMET-RUBBER(TO DASH LOWER PANEL)	1		1.3L 411(EXC.UTK)	

Printed in Japan

REVISED: SEPTEMBER,1968

NOTE

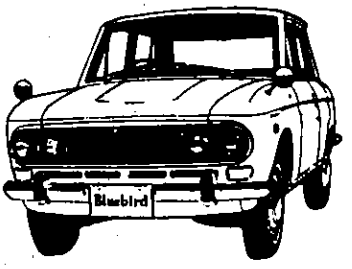

ACCELERATOR (1.6 L & UTK)

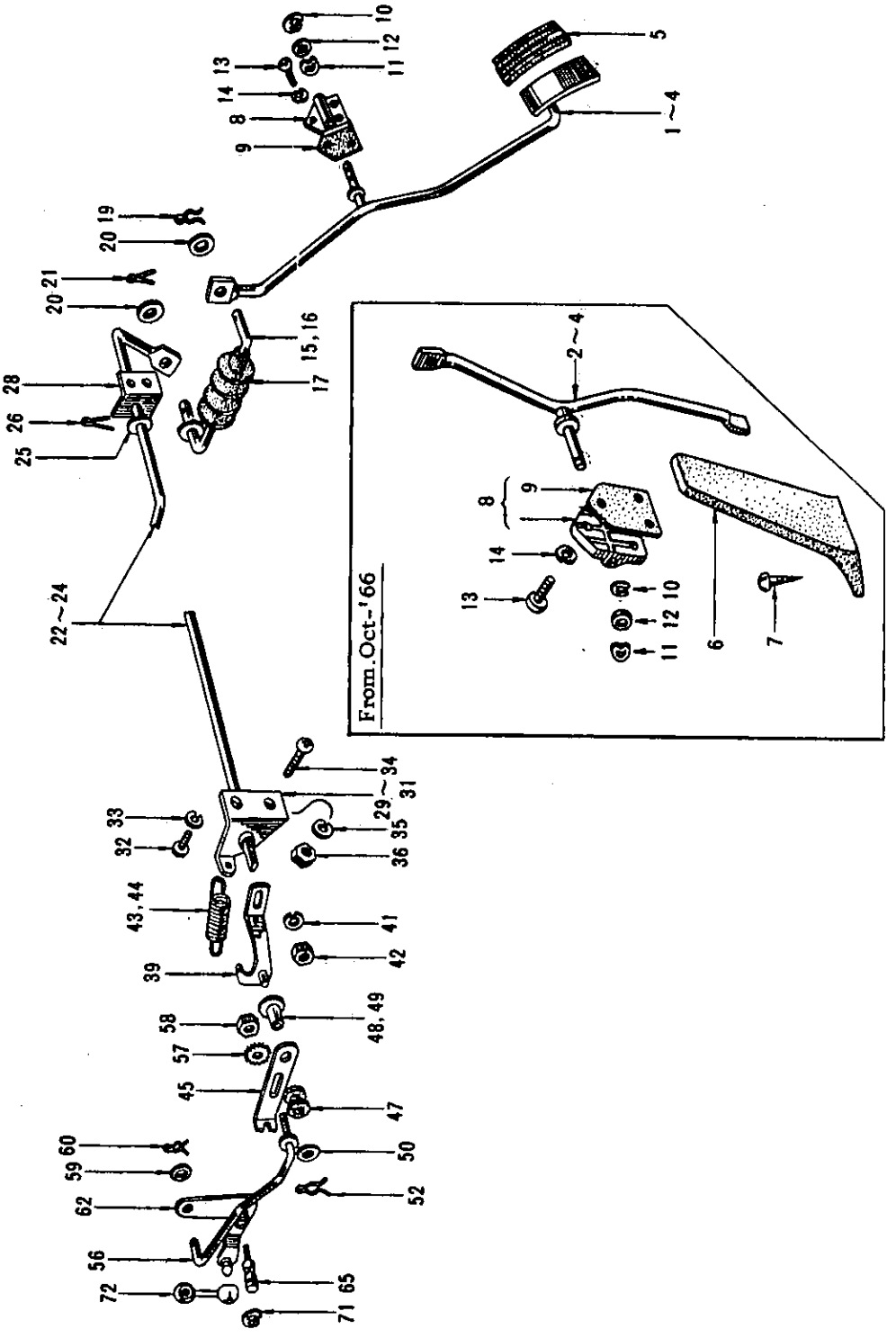

ACCELERATOR (1.6 L & UTK)

S	KEY NO.	PART NO.	PART NAME	Q'TY	SALES UNIT	MODEL	ICA
	1	18010-15801	ASSY-PEDAL,ACCELERATOR (TO SEP-66)	1		UTK 411	
	2	18010-20201	ASSY-PEDAL,ACCELERATOR (FROM OCT.-66)	1	1	UTK 411	N
	3	18010-24501	ASSY-PEDAL,ACCELERATOR (FROM OCT.-66)	1	1	RL-UTK WRL -UTK 411	
	4	18010-24505	ASSY-PEDAL,ACCELERATOR (FROM OCT.-66)	1		RL-UAK WRL -UAK 411	
	5	18017-15800	PAD-ACCELERATOR PEDAL	1	5	UTK,1.6L 411	
*	6	18110-73001	ASSY-FOOT REST,ACCELERATOR(FROM OCT.-66)	1		UTK,1.6L 411	
	7	00511-01610	SCREW-TAPPING(FROM OCT.-66)	1	50	UTK,1.6L 411	
*	8	18020-10601	ASSY-BRACKET,ACCELERATOR PEDAL	1	1	UTK,1.6L 411	
	9	18019-10600	PACKING-PEDAL BRACKET	1	10	UTK,1.6L 411	
	10	18137-10600	RING-SNAP, E TYPE	1	10	UTK,1.6L 411	
	11	18014-15800	WASHER-SPRING	1	1	UTK,1.6L 411	
	12	18019-15800	WASHER-PLAIN	1		UTK,1.6L 411	
	13	00314-01210	SCREW TO FIX PEDAL BRACKET	1	50	UTK,1.6L 411	
	14	00915-11010	WASHER-LOCK TO FIX PEDAL BRACKET	1	100	UTK,1.6L 411	
	15	18141-10601	ROD-ACCELERATOR PEDAL TO CROSS SHAFT	1		UTK 411	

REVISED: SEPTEMBER,1968

Printed in Japan

S	KEY NO.	PART NO.	PART NAME	Q'TY	SALES UNIT	MODEL	ICA
	16	18141-16000	ROD-ACCELERATOR PEDAL TO CROSS SHAFT	1	5	1.6L 411	
	17	18043-61000	BOOT-ACCELERATOR ROD	1	5	UTK,1.6L 411	
	18	18043-24500	BOOT-ACCELERATOR ROD	1	2	UTK,1.6L 411	N
	19	18206-15800	CLIP-PIN	2		UTK,1.6L 411	
	20	18028-61000	WASHER-PLAIN	2	1	UTK,1.6L 411	
	21	18243-61500	CLIP-PIN	2		UTK,1.6L 411	
	22	18100-10605	ASSY-SHAFT,CROSS	1	2	UTK 411	
	23	18101-16700	ASSY-SHAFT,CROSS	1	1	UTK 411	N
	24	18100-16000	ASSY-SHAFT,CROSS	1	1	1.6L 411	
	25	18126-61000	WASHER-CROSS SHAFT	1	1	UTK 411	
	26	00921-21810	PIN-COTTER	1		UTK 411	
	27	18125-16500	RING-E	1	10	UTK,1.6L 411	N
	28	18127-61000	BRACKET-ACCELERATOR(R.H.)	1	10	UTK 411	
	29	18129-16700	BRACKET-ACCELERATOR(L.H.)	1	1	UTK 411	
	30	18128-16000	BRACKET-ACCELERATOR	1	10	1.6L 411	
	31	18128-24500	BRACKET-ACCELERATOR	1	1	1.6L 411	Y
	32	00349-01210	SCREW TO FIX BRACKET	3		UTK 411	
	33	00915-11010	WASHER-LOCK TO FIX BRACKET	3	100	UTK 411	
	34	00314-41610	SCREW TO FIX BRACKET	1	50	UTK 411	
	35	00915-11410	WASHER-LOCK TO FIX BRACKET	1		UTK 411	
	36	00911-14410	NUT TO FIX BRACKET	1		UTK 411	

Printed in Japan

REVISED: SEPTEMBER,1968

S	KEY NO.	PART NO.	PART NAME	Q'TY	SALES UNIT	MODEL	ICA
	37	00314-01210	SCREW TO FIX BRACKET	4	50	1.6L 411	
	38	00915-11010	WASHER-LOCK TO FIX BRACKET	4	100	1.6L 411	
	39	18116-10605	ASSY-LEVER,ACCELERATOR CROSS SHAFT	1	5	UTK 411	
	40	18116-16000	ASSY-LEVER,ACCELERATOR CROSS SHAFT	1	1	1.6L 411	
	41	00915-11610	WASHER-LOCK TO FIX LEVER	1		UTK,1.6L 411	
	42	00911-14610	NUT TO FIX LEVER	1		UTK,1.6L 411	
	43	18138-10800	SPRING-RETURN	1	5	UTK 411	
	44	18138-16001	SPRING-RETURN	1	10	1.6L 411	
	45	18022-10600	PLATE-ADJUSTING,ACCELERATOR CROSS SHAFT TO ROD	1	1	UTK 411	
	46	18022-15800	ROD-CONNECTING,ACCELERATOR	1	10	1.6L 411	
	47	18023-61000	BUSHING-RUBBER,ADJUSTING ROD	1	10	UTK 411	
	48	18027-61000	COLLAR-PIN	1	10	UTK 411	
	49	18027-15800	COLLAR-PIN	1		1.6L 411	
	50	18028-61000	WASHER-ADJUSTING	1	1	UTK,1.6L 411	
	51	18028-15800	RUBBER-DAMPER	1	10	1.6L 411	
	52	18243-61500	CLIP-PIN	1		UTK,1.6L 411	
	53	18223-73000	NUT-ADJUSTING	1	10	1.6L 411	
	54	18224-73000	NUT-LOCK	1	10	1.6L 411	
	55	00911-20810	NUT-LOCK	1	50	1.6L 411	
	56	18142-10606	ROD-ACCELERATOR CROSS SHAFT TO BELL CRANK	1	5	UTK 411	

Printed in Japan

REVISED: SEPTEMBER,1968

S	KEY NO.	PART NO.	PART NAME	Q'TY	SALES UNIT	MODEL	ICA
	57	00916-31410	WASHER-TOOTH LOCK TO FIX ROD	1	50	UTK 411	
	58	00911-14410	NUT TO FIX ROD	1		UTK 411	
	59	00915-41410	WASHER-PLAIN TO FIX ROD	1		UTK 411	
	60	18243-61500	CLIP-PIN TO FIX ROD	1		UTK 411	
	61	18222-15800	ASSY-JOINT,BALL	1	5	1.6L 411	
	62	18146-10605	CRANK-BELL,THROTTLE CONTROL	1	1	UTK 411	
	63	18300-15801	ASSY-CRANK, BELL A	1		1.6L 411	
	64	18303-15800	ASSY-CRANK,BELL B	1	10	1.6L 411	
	65	18150-10605	SHAFT-BELL CRANK	1		UTK 411	
	66	18124-15800	BUSH-NYLON	1	5	1.6L 411	
	67	18302-15801	BRACKET-BELL CRANK	1	5	1.6L 411	
	68	18137-10600	RING-SNAP,E	1	10	1.6L 411	
	69	00314-01210	SCREW	2	50	1.6L 411	
	70	00915-11010	WASHER-LOCK	2	100	1.6L 411	
	71	18137-10605	RING-SNAP(TO FIX BELL CRANK)	1	50	UTK 411	
	72	18170-10605	ASSY-JOINT,BELL CRANK	1	10	UTK 411	
*	73	18410-16701	ASSY-WIRE,CHOKE CONTROL	1	1	UTK 411	
	74	18410-16702	ASSY-WIRE,CHOKE CONTROL	1	2	UTK 411	Y
*	75	18410-15800	ASSY-WIRE,CHOKE CONTROL	1	1	1.6L 411	
	76	18410-15801	ASSY-WIRE,CHOKE CONTROL	1		1.6L 411	Y
	77	18415-13200	ASSY-KNOB,CHOKE CONTROL	1	10	1.6L,UTK 411	

Printed in Japan

REVISED: SEPTEMBER,1968

S	KEY NO.	PART NO.	PART NAME	Q'TY	SALES UNIT	MODEL	ICA
	78	24256-36700	GROMMET-RUBBER(TO DASH LOWER PANEL)	1		UTK 411	
*	79	18417-72600	GROMMET-RUBBER	1		1.6L,UTK 411	
	80	18417-15800	GROMMET-RUBBER	1		1.6L,UTK 411	Y

Printed in Japan

REVISED: SEPTEMBER,1968

NOTE

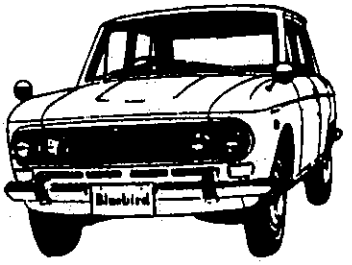

NOTE

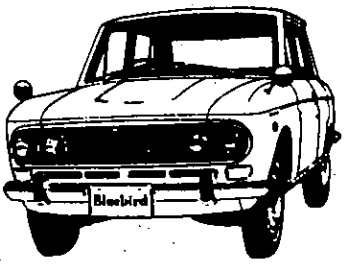

EXHAUST TUBE & MOUNTING

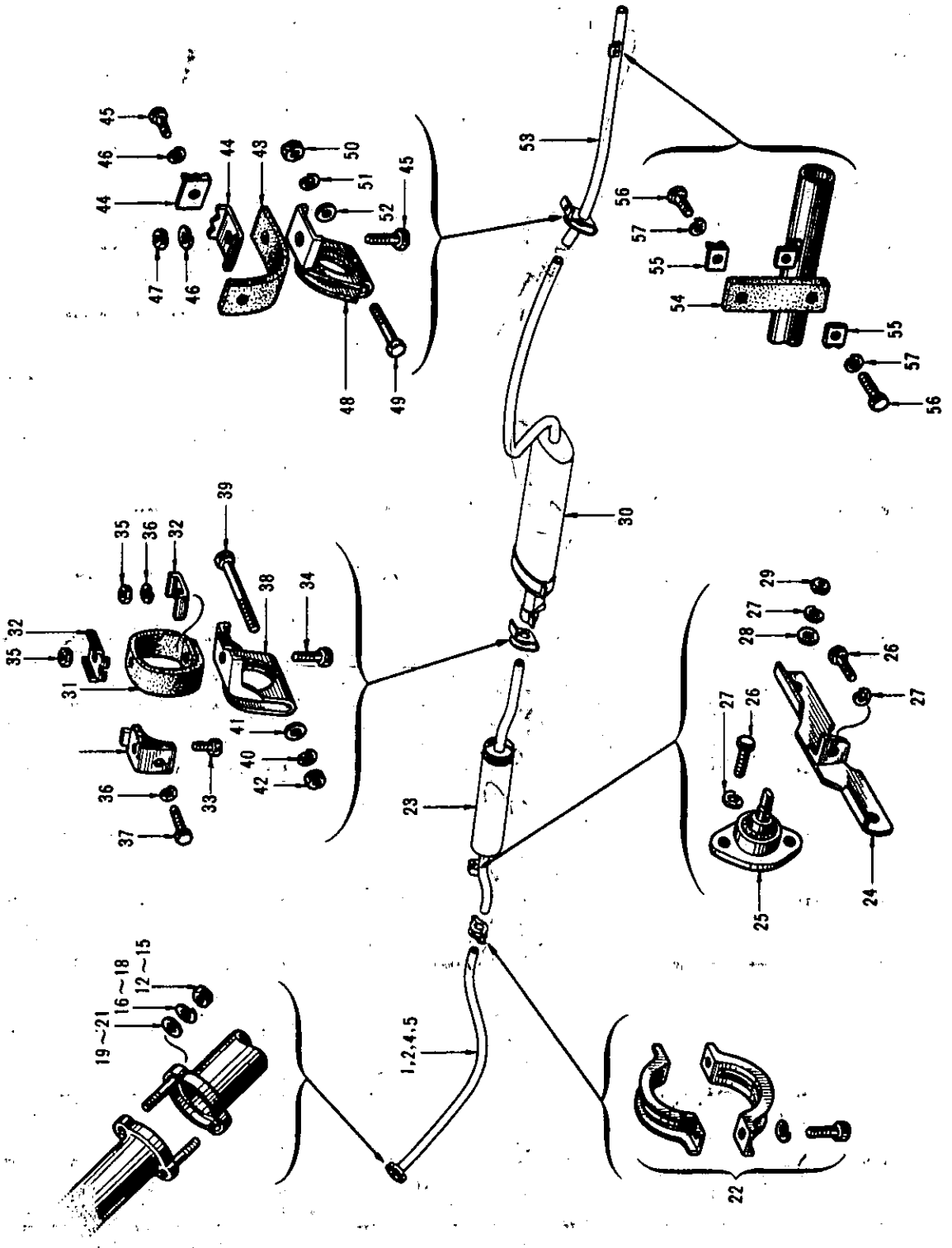

EXHAUST TUBE & MOUNTING

S	KEY NO.	PART NO.	PART NAME	Q'TY	SALES UNIT	MODEL	ICA
*	1	20011-16500 16550	ASSY-TUBE,EXHAUST,FRONT	1		1.3L 411(EXC.UTK)	
	2	20020-16700	ASSY-TUBE,EXHAUST,FRONT	1		UTK 411	R/H SPORTS SEDAN
	3	20041-15801	ASSY-RENDEZOUS,EXHAUST	1	1	1.6L 411	
	4	20011-15800	ASSY-TUBE,EXHAUST,FRONT	1	1	RL-UTK,WRL-UTK 411	L/H DRIVE
	5	20010-24501	ASSY-TUBE,EXHAUST,FRONT	1	1	RL-UAK,WRL-UAK 411	L/H DRIVE
	6	20200-24500	ASSY-TUBE,CENTER WITH PREMUFFLER	1	1	RL-UAK,WRL-UAK 411	
	7	20601-14800	PLATE-FIXING,EXHAUST TUBE	1	1	1.3L 411(EXC.UTK)	
	8	20605-15800	CLAMP-EXHAUST TUBE	2	1	1.6L 411	
	9	00114-54810	BOLT	2		1.6L 411	
	10	20711-10605	GASKET-EXHAUST TUBE	1	10	UTK 411	
	11	20711-15800	GASKET-EXHAUST TUBE	1	5	1.6L 411	
	12	14039-30000	NUT-SPECIAL	2	50	1.3L 411(EXC.UTK)	
	13	14039-30000	NUT-SPECIAL FIXING EXHAUST TUBE	3	50	UTK 411	
	14	14039-30000	NUT-SPECIAL FIXING EXHAUST TUBE	5	50	1.6L 411	
	15	20602-18000	NUT-SPECIAL FIXING EXHAUST TUBE	3	10	1.6L 411	N
	16	00915-11510	WASHER-LOCK FIXING EXHAUST TUBE	3		UTK 411	
	17	00915-11510	WASHER-LOCK(TO E/# R-40000) FIXING EXHAUST TUBE	5		1.6L 411	

REVISED: SEPTEMBER,1968

Printed in Japan

S	KEY NO.	PART NO.	PART NAME	Q'TY	SALES UNIT	MODEL	ICA
	18	08915-13810	WASHER-LOCK(FROM E/# R -40001) FIXING EXHAUST TUBE	3	50	1.6L 411	N
	19	00915-41510	WASHER-PLAIN FIXING EX HUST TUBE	3		UTK 411	
	20	00915-41510	WASHER-PLAIN(TO E/# R-40000)	5		1.6L 411	
	21	08915-43810	WASHER-PLAIN(FROM E/# R-40001)	3	50	1.6L 411	N
	22	20661-16550	ASSY-CLAMP,EXHAUST TUB E LOWER	1	1	411	
	23	20301-16500	ASSY-PRE-MUFFLER	1		411	
	24	20611-10601	BAR-MOUNTING,EXHAUST T UBE	1	50	411	
	25	20136-10600	MOUNTING-RUBBER,EXHAUS T TUBE	2	10	411	
	26	00114-51610	BOLT FIXING PRE-MUFFLE R MOUNTING	5		411	
	27	00115-11510	WASHER-LOCK FIXING PRE -MUFFLER MOUNTING	7		411	
	28	00915-41510	WASHER-PLAIN FIXING PR E-MUFFLER MOUNTING	3		411	
	29	00911-14510	NUT FIXING PRE-MUFFLER MOUNTING	3		411	
	30	20101-16500	ASSY-MUFFLER	1		411	
	31	20623-10600	STRAP-EXHAUST TUBE HAN GER	1	5	411	
	32	20622-10600	WASHER-STRAP	2	10	411	
	33	00114-52210	BOLT	1		411	
	34	00114-52810	BOLT	1	50	411	
	35	00911-14510	NUT	2		411	
	36	00915-11510	WASHER-LOCK	3		411	
	37	00114-51610	BOLT	1		411	

Printed in Japan

REVISED: SEPTEMBER,1968

S	KEY NO.	PART NO.	PART NAME	Q'TY	SALES UNIT	MODEL	ICA
	38	20671-16500	CLAMP-EXHAUST TUBE	1	5	411	
	39	00114-57010	BOLT FIXING EXHAUST TU BE CLAMP	1	50	411	
	40	00915-11510	WASHER-LOCK FIXING EXH AUST TUBE CLAMP	1		411	
	41	00915-41510	WASHER-PLAIN FIXING EX HAUST TUBE CLAMP	1		411	
	42	00911-14510	NUT FIXING EXHAUST TUB E CLAMP	1		411	
	43	20632-10600	STRAP-EXHAUT TUBE HANG ER	1	10	411	
	44	20622-10600	WASHER-STRAP	2	10	411	
	45	00114-52210	BOLT	2		411	
	46	00915-11510	WASHER-LOCK	2		411	
	47	00911-14510	NUT	1		411	
	48	20672-16500	CLAMP-EXHAUST TUBE	1	1	411	
	49	00114-56510	BOLT FIXING CLAMP	1	25	411	
	50	00911-14510	NUT FIXING CLAMP	1		411	
	51	00915-11510	WASHER-LOCK FIXING CLA MP	1		411	
	52	00915-41510	WASHER-PLAIN FIXING LL AMP	1		411	
	53	20401-16500	TUBE-EXHAUST REAR	1		411	
	54	20632-10600	STRAP-EXHAUST TUBE HAN GER	1	10	411	
	55	20622-10600	WASHER-STRAP FIXING EX HAUST REAR TUBE	2	10	411	
	56	00114-52910	BOLT FIXING EXHAUST RE AR TUBE	2		411	
	57	00915-11510	WASHER-LOCK FIX ING EX HAUST REAR TUBE	2		411	

Printed in Japan

REVISED: SEPTEMBER, 1968

NOTE

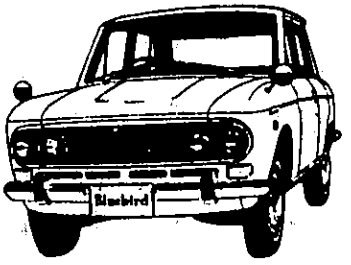

NOTE

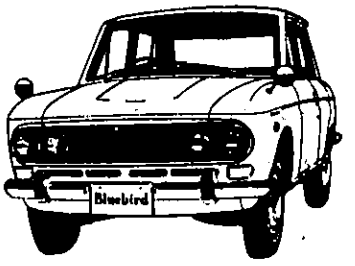

Printed in Japan

WATER PUMP & FAN

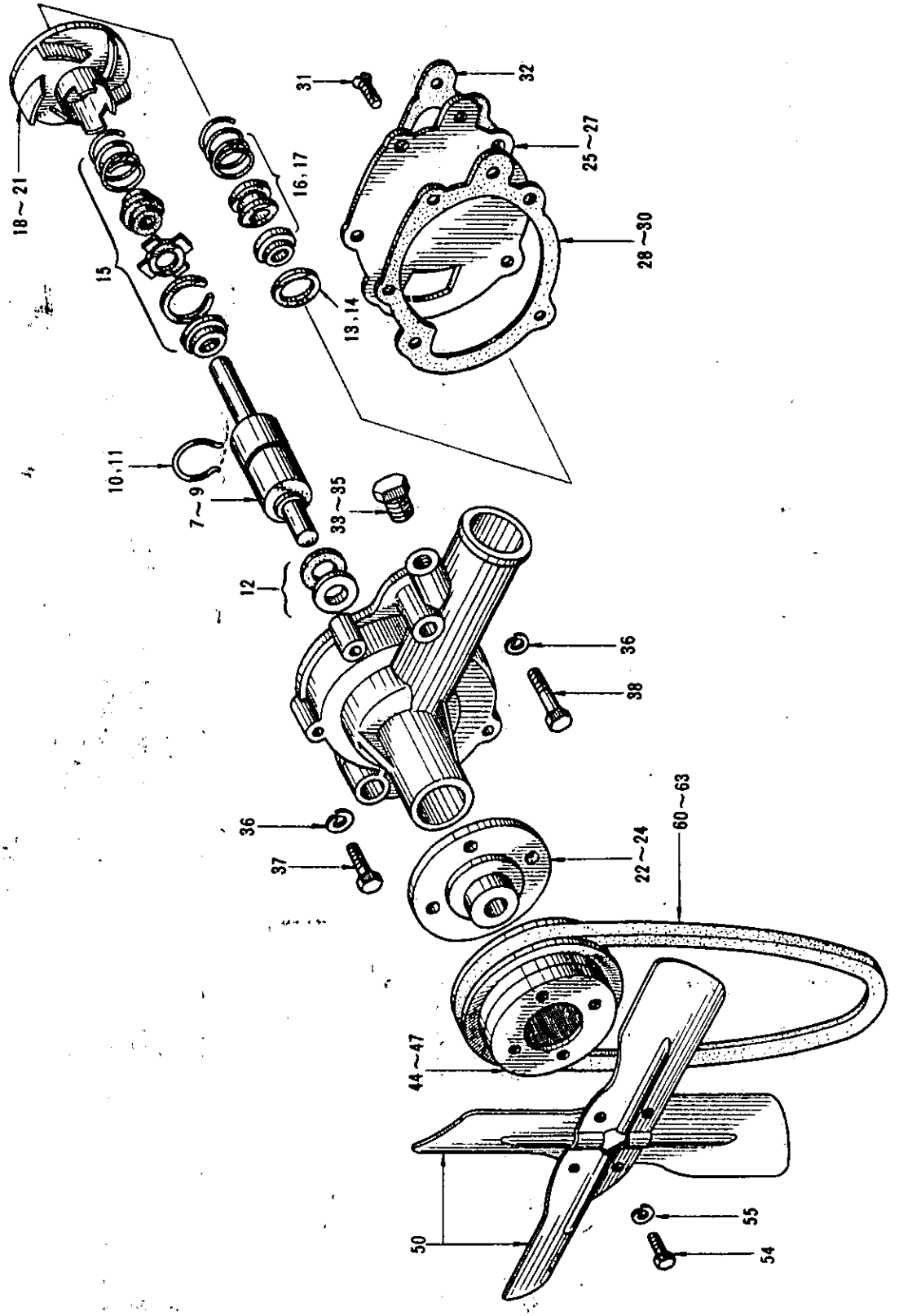

S	KEY NO.	PART NO.	PART NAME	Q'TY	SALES UNIT	MODEL	ICA
			WATER PUMP & FAN				
*	1	21010-13200	ASSY-PUMP,WATER	1	1	1.3L 411	
	2	21010-13201	ASSY-PUMP,WATER	1	1	1.3L 411	Y
*	3	21010-15800	ASSY-PUMP,WATER(TO E/# R-26018)	1	1	1.6L 411	
	4	21010-15801	ASSY-PUMP,WATER(FROM E/# R-26019 TO E/# R-40000)	1		1.6L 411	Y
*	5	21010-18810	ASSY-PUMP,WATER(FROM E/# R-40001)	1	1	1.6L 411	C
	6	21010-18811	ASSY-PUMP,WATER	1	1	1.6L 411	Y
	7	21035-13200	BEARING-WATER PUMP(TO E/# J-22688)	1		1.3L 411	
	8	21035-13201	BEARING-WATER PUMP(FROM E/# J-22689)	1	10	1.3L 411	N
	9	21035-14600	BEARING	1	1	1.6L 411	
	10	21043-04000	WIRE-LOCK,WATER PUMP(TO E/# R-26018)	1	50	411	
	11	21043-73000	WIRE-LOCK,WATER PUMP(FROM E/# R-26019)	1	50	1.6L 411	Y
	12	21026-71200	ASSY-SEAL,WATER PUMP	1	1	1.3L 411	
	13	21026-73000	ASSY-SEAL,WATER PUMP(FROM E/# J-22689)	1	10	1.3L 411	
	14	21026-14600	ASSY-SEAL,WATER PUMP	1	1	1.6L 411	
	15	21027-61000	ASSY-SEAL,FLOATING,WATER PUMP(TO E/# J-22688)	1	1	1.3L 411	
	16	21027-73000	ASSY-SEAT,FLOATING,WATER PUMP(FROM E/# J-22689)	1	1	1.3L 411	N

Printed in Japan

REVISED: SEPTEMBER,1968

S	KEY NO.	PART NO.	PART NAME	Q'TY	SALES UNIT	MODEL	ICA
	17	21027-62200	ASSY-SEAT,FLOATING,WATER PUMP	1	10	1.6L 411	
	18	21022-13200	VANE-WATER PUMP(TO E/# J-22688)	1	1	1.3L 411	
	19	21022-13201	VANE-WATER PUMP(FROM E/# J-22689)	1		1.3L 411	N
*	20	21022-14600	VANE-WATER PUMP	1	1	1.6L 411	
	21	21022-62200	VANE-WATER PUMP	1	1	1.6L 411	Y
	22	21054-04000	HUB-FAN & WATER PUMP PULLEY	1		1.3L 411	
	23	21054-15800	HUB-WATER PUMP PULLEY	1	1	1.6L 411	
	24	21054-18810	HUB-WATER PUMP PULLEY	1	1	1.6L 411	Y
	25	21013-13200	COVER-WATER PUMP	1	1	1.3L 411	
	26	21013-14600	COVER-WATER PUMP(TO E/# R-26018)	1	1	1.6L 411	
	27	21013-66001	COVER-WATER PUMP(FROM E/# R-26019)	1	1	1.6L 411	Y
	28	21014-13200	GASKET-WATER PUMP COVER(PUMP BODY SIDE)	1	10	1.3L 411	
	29	21014-14600	GASKET-WATER PUMP COVER(PUMP BODY SIDE)(TO E/# R-26018)	1	10	1.6L 411	
	30	21014-66001	GASKET-WATER PUMP COVER(PUMP BODY SIDE)(FROM E/# R-26019)	1		1.6L 411	Y
	31	21012-01300	SCREW	2	1	411	
	32	00931-30610	PLUG-TAPER	1	10	411	
	33	21074-13200	GASKET-WATER PUMP COVER(BLOCK SIDE)	1	10	1.3L 411	
	34	21074-14600	GASKET-WATER PUMP COVER(BLOCK SIDE)	1		1.6L 411	
	35	21013-66001	GASKET-WATER PUMP COVER(BLOCK SIDE)	1	1	1.6L 411	Y

Printed in Japan

REVISED: SEPTEMBER,1968

S	KEY NO.	PART NO.	PART NAME	Q'TY	SALES UNIT	MODEL	ICA
*	36	00915-11500	WASHER-LOCK FIXING WATER PUMP	3	50	1.3L 411	
	37	00114-53510	BOLT FIXING WATER PUMP	2	50	1.3L 411	
	38	00114-55010	BOLT FIXING WATER PUMP	1	50	1.3L 411	
	39	00911-14610	NUT FIXING WATER PUMP	1		1.6L 411	
	40	00915-11610	WASHER-LOCK FIXING WATER PUMP	1		1.6L 411	
	41	00111-56010	BOLT FIXING WATER PUMP	2	25	1.6L 411	
	42	00915-41610	WASHER-LOCK FIXING WATER PUMP	1		1.6L 411	
	43	14056-15800	CONNECTOR-THREE WAY	1		1.6L 411	
	44	21051-10600	PULLEY-FAN & WATER PUMP(131 M/M)	1	1	1.3L 411	
	45	21051-15800	PULLEY-FAN & WATER PUMP(157 M/M)	1	1	1.6L 411	
	46	21051-10800	PULLEY-FAN & WATER PUMP(143 M/M)	1	1	OP.1.3L 411	
	47	21051-16700	PULLEY-FAN & WATER PUMP(133 M/M)	1	1	OP.UTK 411	
*	48	27065-72800	CAP-RUBBER	1		1.6L 411	
	49	27075-32600	CLAMP-HOSE	1	1	1.6L 411	
*	50	21060-07200	ASSY-BLADE,FAN	1	1	1.3L 411	
	51	21060-15801	ASSY-FAN,SPIDER	1	1	1.6L 411	
*	52	21064-10600	SPACER-FAN(TO MAR-66)	1	10	1.3L 411	
	53	21064-19000	SPACER-FAN(FROM APR.-66)	1		1.3L 411	Y
	54	00114-42510	SCREW-SET TO FIX FAN TO PULLEY	4	50	1.3L 411	
*	55	00915-21400	WASHER-LOCK TO FIX FAN TO PULLEY	4	50	1.3L 411	
	56	00124-41610	BOLT FIXING SPIDER FAN	4	50	1.6L 411	

Printed in Japan

REVISED: SEPTEMBER.1968

S	KEY NO.	PART NO.	PART NAME	Q'TY	SALES UNIT	MODEL	ICA
	57	00515-11410	WASHER-LOCK FIXING SPI DER FAN	4		1.6L 411	
	58	08130-61610	BOLT	4	50	1.6L 411	
	59	08915-13610	SPRING LOCK WASHER	4	25	1.6L 411	
	60	21067-10600	BELT-FAN	1	10	1.3L 411	
	61	21067-15800	BELT-FAN	1	5	1.6L 411	
	62	21067-10800	BELT-FAN(USED FOR 2 SM B TYPE BATTERY)	1	10	OP.1.3L 41 1	
	63	21067-16700	BELT-FAN	1	10	OP.UTK 411	
	64	21026-13225	KIT-REPAIR,SEAL(UP TO E/# J-22688)	1	1	1.3L 411	
	65	21026-13226	KIT-REPAIR,SEAL(FROM E /# J-22689)	1	10	1.3L 411	N
	66	21026-71200	ASSY-SEAL	1	1	1.3L 411	
	67	21026-73000	ASSY-SEAL	1	10	1.3L 411	
	68	21027-61000	ASSY-SEAT	1	1	1.3L 411	
	69	21027-73000	ASSY-SEAT	1	1	1.3L 411	
	70	21014-13200	GASKET,BODY SIDE	1	10	1.3L 411	
	71	21074-13200	GASKET,BLOCK SIDE	1	10	1.3L 411	
	72	21026-62225	KIT-REPAIR,SEAL(INC.4, 5,9,12)	1	1	1.6L 411	

Printed in Japan

REVISED: SEPTEMBER,1968

NOTE

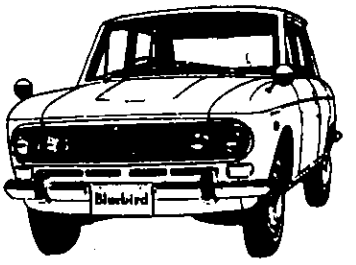

RADIATOR

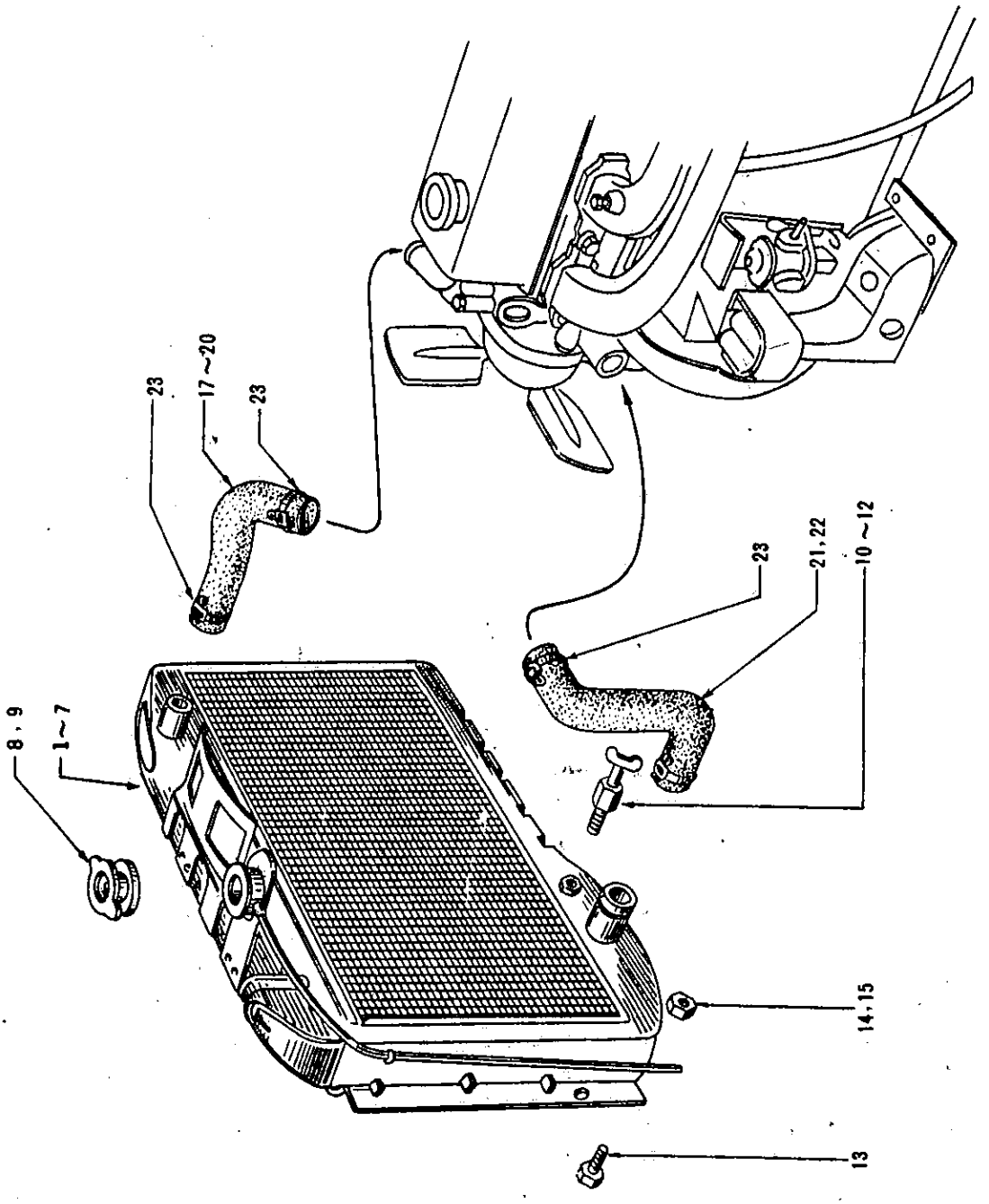

S	KEY NO.	PART NO.	PART NAME	QTY	SALES UNIT	MODEL	ICA
			RADIATOR				
	1	21400-16500	ASSY-RADIATOR(TO MAR-66)	1		1.3L (EXC. UTK) 411	
	2	21400-18400	ASSY-RADIATOR(FROM APR.-66)	1		1.3L (EXC. UTK) 411	N
	3	21400-16700	ASSY-RADIATOR(TO MAR-66)	1		UTK 411	
	4	21400-19400	ASSY-RADIATOR(FROM APR.-66)	1		UTK 411	N
	5	21400-13211	ASSY-RADIATOR(TO SEP-66)	1		411 FINLAND	
	6	21400-18700	ASSY-RADIATOR(FROM OCT.-66)	1		411 FINLAND	N
	7	21500-24500	ASSY-RADIATOR W/OIL COOLER	1		1.6L 411	
	8	21430-30001	ASSY-CAP,PRESSURE VALVE 3 KG/CM2	1	1	1.3L 411	
	9	21430-10600	ASSY-CAP,PRESSURE VALVE 9 KG/CM2	1	10	1.6L 411	
	10	21211-12600	COCK-DRAIN	1	1	1.3L 411	
	11	21211-73400	COCK-DRAIN(TO E/# R-23201)	1	5	1.6L 411	
	12	21211-12601	COCK-DRAIN(FROM E/# R-23202)	1	5	1.6L 411	N
	13	00114-51800	BOLT TO FIX RADIATOR	4	50	411	
	14	00912-34510	NUT-SELF LOCK TO FIX RADIATOR	4		411	
	15	00911-14510	NUT TO FIX RADIATOR	4		411	N
	16	00915-11510	WASHER-LOCK TO FIX RADIATOR	4		411	

REVISED: SEPTEMBER,1968

Printed in Japan

S	KEY NO.	PART NO.	PART NAME	Q'TY	SALES UNIT	MODEL	ICA
	17	21503-18400	HOSE-RADIATOR TO WATER PUMP FOR COOLER(FROM OCT.-66)	1	5	OP.1.3L 411 1	
	18	21501-16900	HOSE-RADIATOR TO CYLIN DER HEAD(TO SEP-66)	1		1,3L 411	
	19	21501-18700	HOSE-RADIATOR TO CYLIN DER HEAD(FROM OCT-66)	1	5	1,3L 411	N
	20	21501-15901	HOSE-RADIATOR TO CYLIN DER HEAD	1	5	1.6L 411	
	21	21503-16900	HO-E RADIATOR TO WATER PUMP	1	5	1.3L 411	
	22	21503-24500	HOSE-RADIATOR TO WATER PUMP	1	5	1,6L 411	
	23	21504-30000	CLIP-CONNECTOR,OUTER E LBOW TO RADIATOR	2		411	
	24	21505-28000	CLAMP-UPPER HOSE	2		411	C
	25	21504-30000	CLIP-CONNECTOR,OUTER E LBOW TO RADIATOR	2		411	
	26	21506-28000	CLAMP-LOWER HOSE	2	5	411	C
	27	21475-18400	SHROUD-RADIATOR R.H.FO R COOLER	1	1	OP.411	
	28	21476-18400	SHROUD-RADIATOR L.H.FO R COOLER	1	1	OP.411	
	29	21621-24500	ASSY-TUBE,OIL COOLER F OR AUTOMATIC TRANSMISS ION	1	1	RL-UAK,WRL -UAK 411	
	30	21623-24500	ASSY-TUBE,COOLER FOR A UTO-MATIC TRANSMISSION	1	5	RL-UAK,WRL -UAK 411	
	31	21641-73700	CLAMP-PIPE,OIL COOLER	1	10	RL-UAK,WRL -UAK 411	
	32	21641-24500	CLAMP-PIPE,OIL COOLER	1	5	RL-UAK,WRL -UAK 411	
	33	21631-24500	ASSY-HOSE,FLEXIBLE R.H	1	1	RL-UAK,WRL -UAK 411	

Printed in Japan

REVISED: SEPTEMBER,1968

S	KEY NO.	PART NO.	PART NAME	Q'TY	SALES UNIT	MODEL	ICA
	34	21631-73701	ASSY-HOSE,FLEXIBLE R.H	1	1	RL-UAK,WRL -UAK 411	Y
	35	21631-24500	ASSY-HOSE,FLEXIBLE L.H	1	1	RL-UAK,WRL -UAK 411	

Printed in Japan

REVISED: SEPTEMBER,1968

NOTE

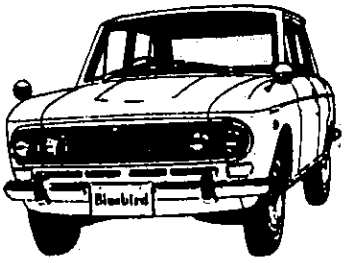

NOTE

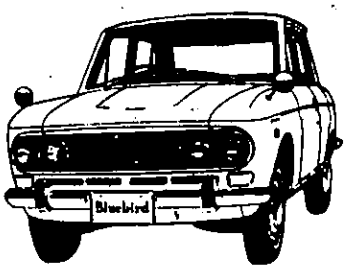

ENGINE MOUNTING

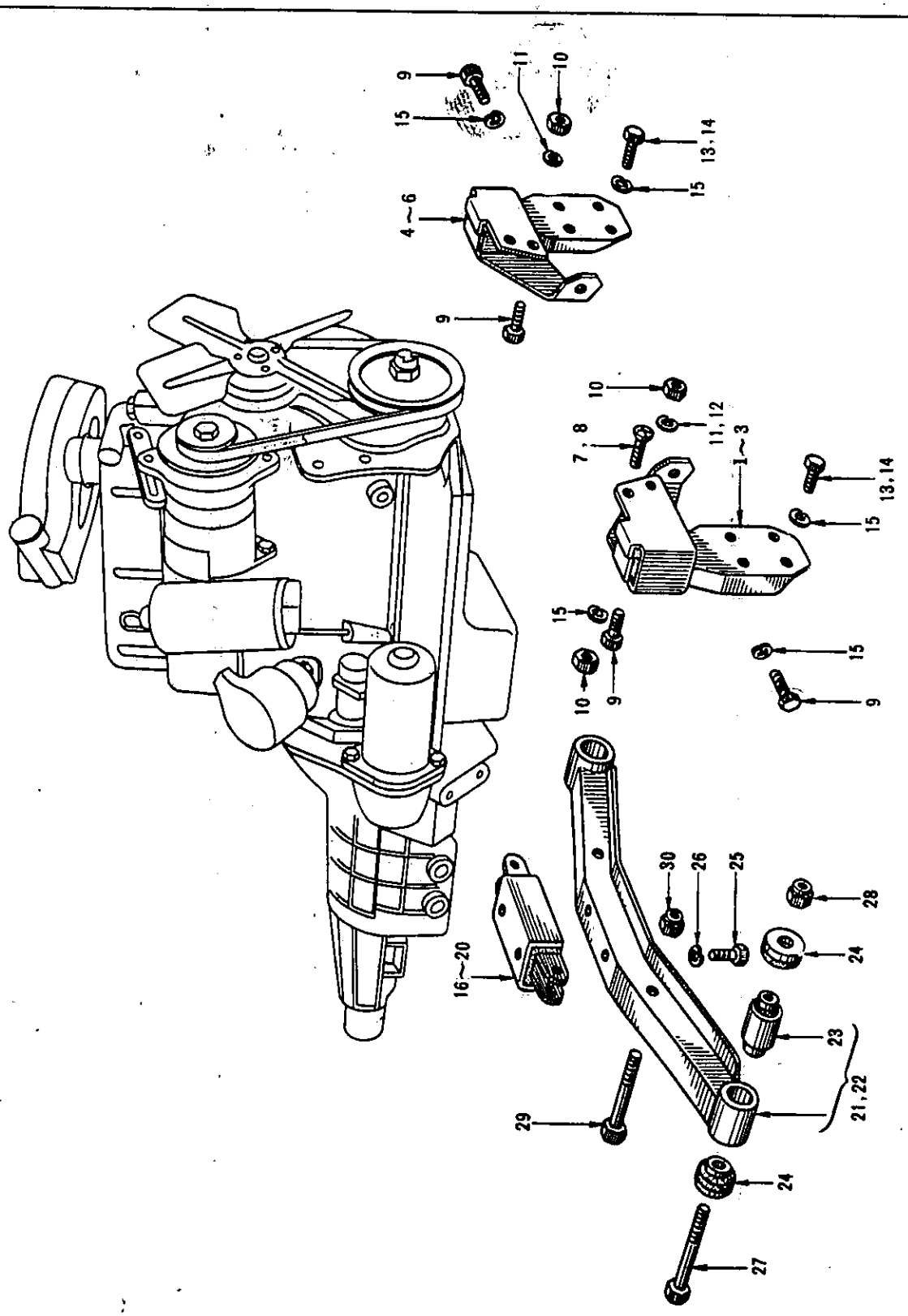

S	KEY NO.	PART NO.	PART NAME	Q'TY	SALES UNIT	MODEL	ICA
			ENGINE MOUNTING				
	1	11222-10600	ASSY-INSULATOR,ENGINE MOUNTING,FRONT(R.H.)	1	1	1.3L 411	
*	2	11222-15800	ASSY-INSULATOR,ENGINE MOUNTING,FRONT(R.H.)	1		1.6L 411	
	3	11222-15801	ASSY-INSULATOR,ENGINE MOUNTING,FRONT(R.H.)	1	1	1.6L 411	Y
	4	11223-10600	ASSY-INSULATOR,ENGINE MOUNTING,FRONT(L.H.)	1	1	1.3L 411	
*	5	11223-15800	ASSY-INSULATOR,ENGINE MOUNTING,FRONT(L.H.)	1		1.6L 411	
	6	11223-15801	ASSY-INSULATOR,ENGINE MOUNTING,FRONT(L.H.)	1		1.6L 411	Y
	7	00134-62510	BOLT FIXING INSULATOR TO BLACK	2	50	1.3L 411	
*	8	00114-62800	BOLT FIXING INSULATOR TO BLACK	2	50	1.6L 411	
	9	00134-52510	BOLT FIXING INSULATOR TO BLACK	4	100	411	
	10	00912-44510	NUT-SELF LOCK FIXING INSULATOR TO BLACK	4	50	411	
	11	00915-51610	WASHER-PLAIN(TO E/# R-40000)FIXING INSULATOR TO BLACK	2		411	
	12	08915-14010	WASHER-PLAIN(FROM E/# R-400001)	2	50	1.6L 411	N
	13	00114-62210	BOLT(TO E/# R-40000)FIXING INSULATOR TO MEMBER	6		411	
	14	08111-02210	BOLT(FROM E/# R-40001) FIXING INSULATOR TO MEMBER	6	50	1.6L 411	N

S	KEY NO.	PART NO.	PART NAME	Q'TY	SALES UNIT	MODEL	ICA
	15	00915-21610	WASHER-LOCK FIXING INSULATOR TO MEMBER	6		411	
	16	11322-13201	INSULATOR-ENGINE MOUNTING,REAR	1	1	1.3L 411(EXC.UTK)	
	17	11322-16701	INSULATOR-ENGINE MOUNTING,REAR	1	1	UTK 411	
*	18	11322-15801	INSULATOR-ENGINE MOUNTING,	1		1.6L 411(EXC.RL-UAK, WRL-UAK)	
	19	11322-15802	INSULATOR-ENGINE MOUNTING,REAR	1		1.6L 411(EXC.RL-UAK, WRL-UAK)	Y
*	20	11322-20200	INSULATOR-ENGINE MOUNTING,REAR	1		RL-UAK,WRL-UAK-411	
	21	11340-13251	ASSY-MEMBER,CROSS,ENGINE MOUNTING REAR WITH SPACER	1	1	411(EXC.RL-UAK,WRL-UAK)	
	22	11340-24550	ASSY-MEMBER,CROSS,ENGINE MOUNTING REAR WITH SPACER	1		RL-UAK,WRL-UAK 411	
	23	11372-10602	BUSHING-ENGINE MOUNTING REAR	2	5	411	
*	24	11357-36702	SPACER-BUSHING	4	10	411	
	25	00114-52010	BOLT FIXING MEMBER TO INSULATOR	2		411	
	26	00991-51151	WASHER-LOCK FIXING MEMBER TO INSULATOR	2		411	
	27	00114-78510	BOLT FIXING MEMBER	2	10	411	
	28	00912-34710	NUT-SELF LOCK FIXING MEMBER	2	100	411	
	29	00114-55510	BOLT FIXING MEMBER	2	25	411	
	30	00912-44510	NUT-SELF LOCK FIXING MEMBER	2	50	411	

Printed in Japan
REVISED: SEPTEMBER, 1968

NOTE

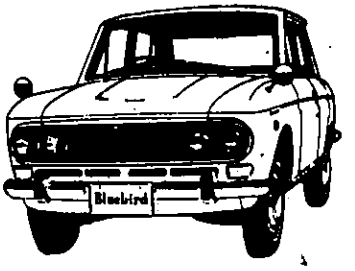

DISTRIBUTOR (HITACHI)

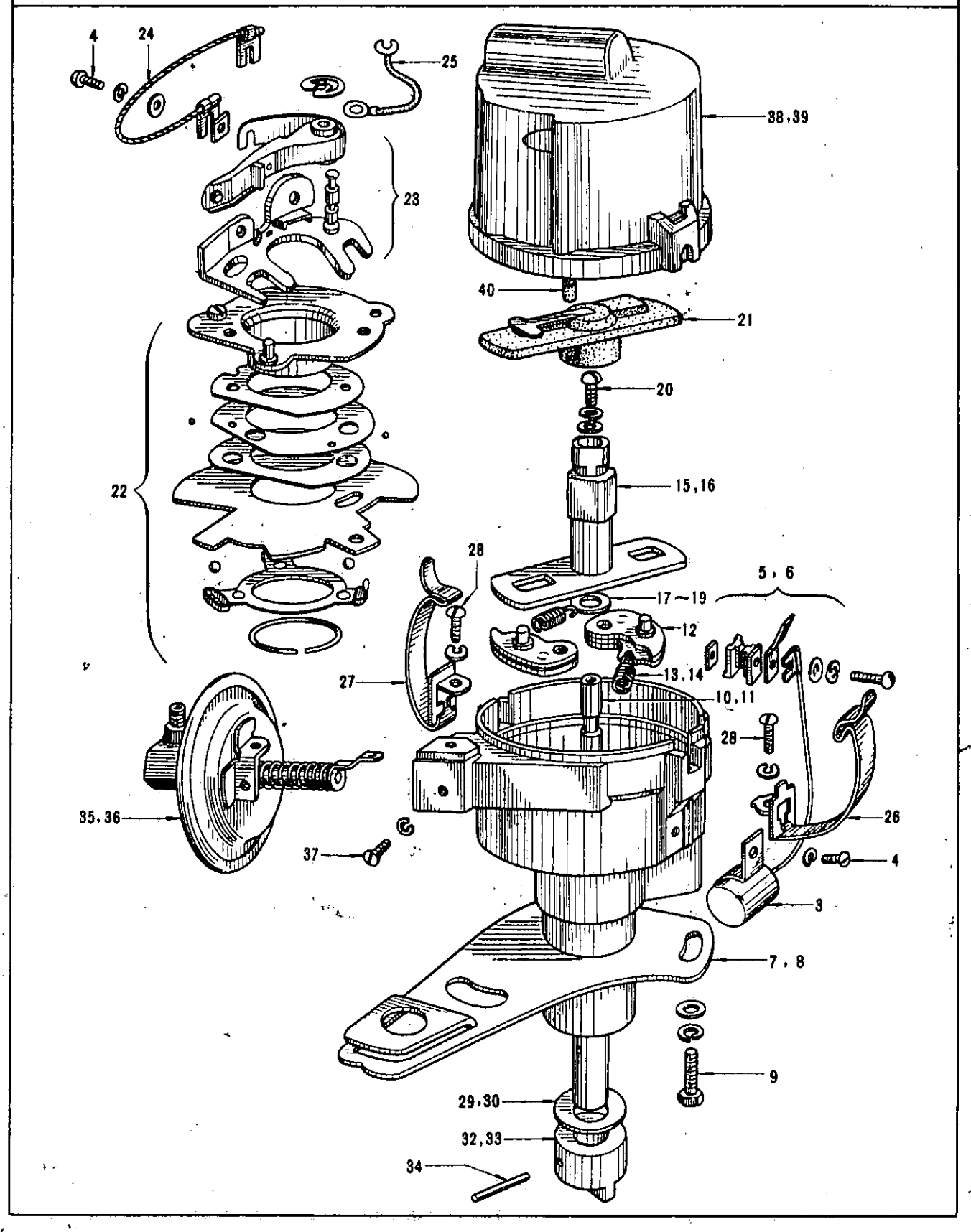

DISTRIBUTOR (HITACHI)

S	KEY NO.	PART NO.	PART NAME	Q'TY	SALES UNIT	MODEL	ICA
	1	22100-16501	ASSY-DISTRIBUTOR	1		1.3L 411	
	2	22100-18800	ASSY-DISTRIBUTOR	1	1	1.6L 411	
▫	3	22102-00800	ASSY-CONDENSER	1	10	411	
▫	4	22132-85060	SCREW	2	2	411	
	5	22403-13201	ASSY-TERMINAL	1	10	1.3L 411	
	6	22403-14600	ASSY-TERMINAL	1		1.6L 411	
	7	22180-13201	PLATE-FIXING	1	5	1.3L 411	
	8	22180-14600	PLATE-FIXING	1	5	1.6L 411	
	9	22201-71300	BOLT 5	1	10	411	
	10	22108-13201	ASSY-SHAFT	1	1	1.3L 411	
	11	22108-14600	ASSY-SHAFT	1		1.6L 411	
	12	22109-71300	ASSY-WEIGHT,GOVERNOR	2		411	
	13	22110-16501	SET-SPRING,GOVERNOR	1	10	1.3L 411	
	14	22110-14600	SET-SPRING,GOVERNOR	1	10	1.6L 411	
	15	22132-71300	SET-CAM	1	2	1.3L 411	
	16	22132-14600	SET-CAM	1		1.6L 411	
	17	22117-32200	WASHER-THRUST	1		1.3L 411	
	18	22117-85060	WASHER-THRUST	1		1.6L 411	
	19	22118-85060	WASHER-THRUST(0.8T)	1	1	411	
	20	22103-50000	SCREW 4	1	10	411	
	21	22157-71300	ASSY-HEAD,ROTOR	1	10	411	
	22	22136-71300	ASSY-BRAKER,CENTER	1	2	411	
	23	22145-71301	SET-CONTACT	1	1	411	

Printed in Japan

REVISED: SEPTEMBER,1968

S	KEY NO.	PART NO.	PART NAME	Q'TY	SALES UNIT	MODEL	ICA
	24	22183-71300	ASSY-WIRE,LEAD	1	10	411	
	25	22182-71300	ASSY-WIRE,EARTH	1	10	411	
	26	22167-71300	ASSY-CLAMP,CAP(1)	1	10	411	
	27	22168-71300	ASSY-CLAMP,CAP(2)	1	50	411	
	28	22103-50000	SCREW 4	2	10	411	
	29	22118-43800	WASHER-THRUST	1		411	
	30	22148-14600	WASHER-THRUST(T=0.15)	AR	50	1.6L 411	
	31	22948-14600	ASSY-PINION	1	10	1.6L 411	
	32	22119-13201	ASSY-COUPLING	1	5	1.3L 411	
	33	22119-10400	ASSY-COUPLING	1	2	1.6L 411	
	34	22121-71300	PIN-COUPLING	1	50	411	
*	35	22301-16501	ASSY-CONTROL,VACUUM	1	1	1.3L 411	
	36	22301-14600	ASSY-CONTROL,VACUUM	1	1	1.6L 411	
*	37	22139-85060	SCREW 4	2	10	411	
	38	22162-13201	ASSY-CAP,DISTRIBUTOR	1		1.3L 411	
	39	22162-71300	ASSY-CAP,DISTRIBUTOR	1	1	1.6L 411	
	40	22165-30101	ASSY-POINT,CARBON	1	10	411	
	41	22171-00800	CAP-GUM	5	10	1.6L 411	
	42	22208-13200	ADJUSTER,ECCENT.	1	10	1.6L 411	

Printed in Japan

REVISED: SEPTEMBER,1968

NOTE

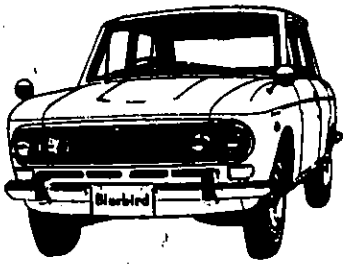

ALTERNATOR (MITSUBISHI)

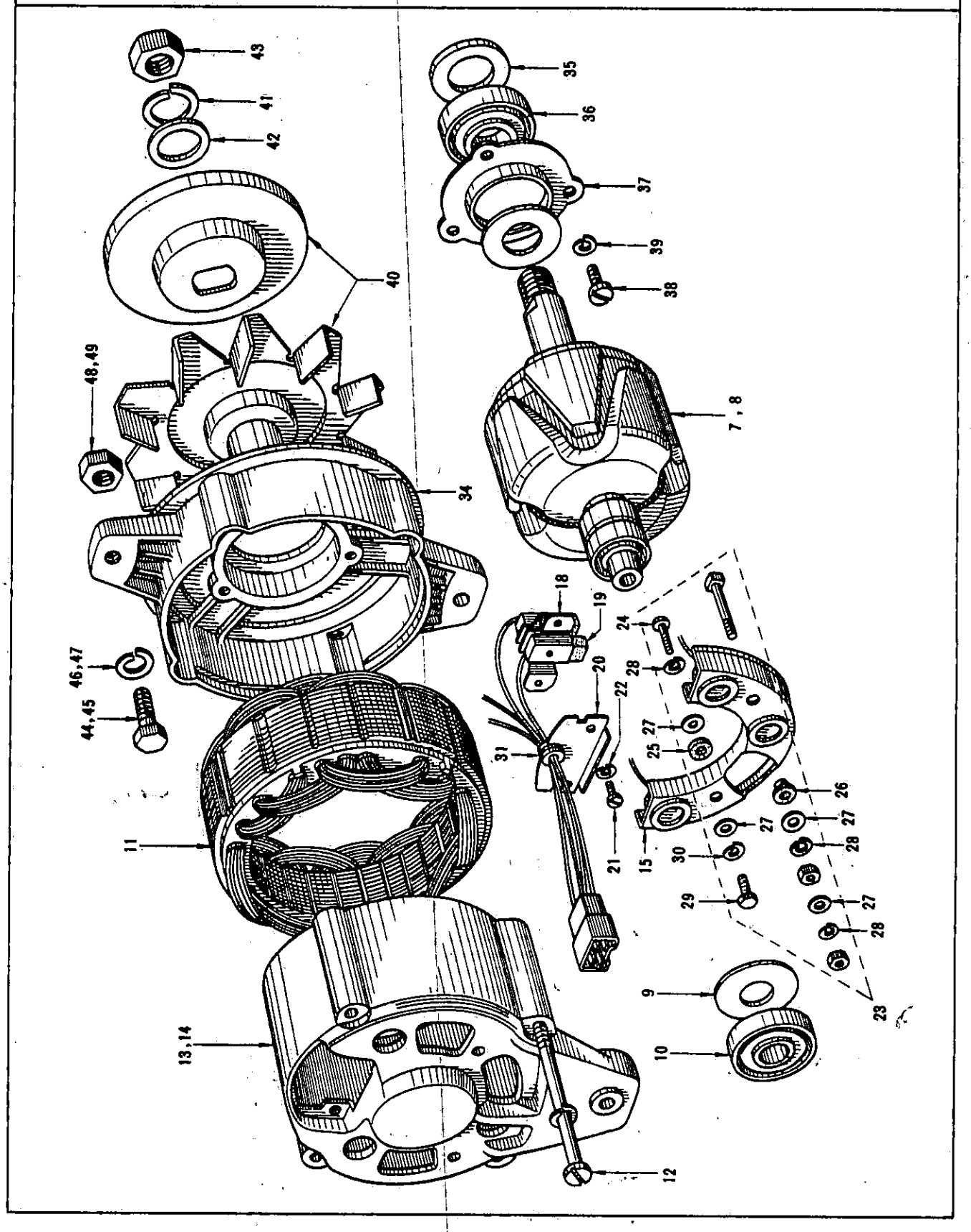

ALTERNATOR (MITSUBISHI)

S	KEY NO.	PART NO.	PART NAME	Q'TY	SALES UNIT	MODEL	ICA
*	1	23100-16510	ASSY-ALTERNATOR(12V-30 A)(TO E/# J-23487)	1		411	
*	2	23100-16512	ASSY-ALTERNATOR(12V-30 A)(FROM E/# J-23488)	1	1	411	C
*	3	23100-16710	ASSY-ALTERNATOR(12V-30 A)(FROM APR.-66)	1	1	411(EXC.1.6L)	N
*	4	23100-16512	ASSY-ALTERNATOR(12V-30 A)	1	1	1.6L 411	
	5	24299-14800	KIT-CONNECTOR TO ALTERNATOR	1	1	411	
	6	24299-14801	KIT-CONNECTOR TO REGULATOR	1	1	411	
	7	23108-14610	ASSY-ROTOR	1	1	411	
	8	23108-16512	ASSY-ROTOR(FROM E/# 23488)	1	1	411	N
	9	23116-14610	WASHER-SEAL	1	10	411	
	10	23120-14610	BEARING-BALL	1	1	411	
	11	23102-14610	ASSY-STATOR	1	1	411	
	12	23131-14610	BOLT-THROUGH	4	10	411	
*	13	23127-14610	ASSY-COVER,REAR	1	1	411	
	14	23127-16512	ASSY-COVER,REAR(FROM E/# 23488)	1	1	411	N
*	15	23230-14610	ASSY-DIODE,SET	1	1	411	
	16	23231-61210	SET-DIODE(MINUS)	1	10	411	
	17	23232-61210	SET-DIODE(PLUS)	1	10	411	
	18	23133-14610	ASSY-HOLDER,BRUSH	1	5	411	
	19	23135-14610	ASSY-BRUSH	2	10	411	

Printed in Japan

REVISED: SEPTEMBER,1968

S	KEY NO.	PART NO.	PART NAME	Q'TY	SALES UNIT	MODEL	ICA
	20	23107-14610	COVER-BRUSH	1	1	411	
	21	23352-09610	SCREW	2	1	411	
	22	22156-01302	WASHER	2		411	
	23	23156-14610	ASSY-TERMINAL	1	1	411	
	24	23158-14610	SCREW	1	10	411	
	25	23161-14610	INSULATOR	1	10	411	
	26	23157-14610	INSULATOR	1	10	411	
	27	22213-71311	WASHER	1	10	411	
	28	22203-32210	WASHER-SPRING	1	50	411	
	29	23139-12210	BOLT-TERMINAL E	1	10	411	
	30	22203-32210	WASHER-SPRING	1	50	411	
	31	23159-14610	GROMMET	1	10	411	
	32	23233-14610	CLIP	1	1	411	
*	33	23222-16512	ASSY-CONNECTOR	1	10	411	
	34	23118-14610	ASSY-COVER,FRONT	1	1	411	
	35	23121-14610	WASHER-SEAL	1	10	411	
*	36	23120-14611	BEARING-BALL	1	1	411	
	37	23123-14610	RETAINER-BEARING	1	10	411	
	38	23352-12210	SCREW	3	10	411	
	39	22203-32210	WASHER-SPRING	3	50	411	
	40	23151-16510	ASSY-PULLEY	1	10	411	
	41	23152-35010	WASHER-LOCK	1	1	411	
	42	23162-12210	WASHER-PLAIN	1	10	411	
	43	23153-35010	NUT	1	10	411	
	44	23139-12900	BOLT(TO E/# R-40000)ALTERNATOR TO BRACKET FIX	1	10	411	

Printed in Japan

REVISED: SEPTEMBER,1968

S	KEY NO.	PART NO.	PART NAME	Q'TY	SALES UNIT	MODEL	ICA
	45	23139-18810	BOLT(FROM E/# R-40001) ALTERNATOR TO BRACKET FIX	1	10	411	N
	46	00915-11510	WASHER-LOCK(TO E/# R-40000)ALTERNATOR TO BRACKET FIX	1		411	
	47	08915-13810	WASHER-LOCK(FROM E/# R-40001)ALTERNATOR TO BRACKET FIX	1	50	411	N
	48	00911-24510	NUT(TO E/# R-40000)ALTERNATOR TO BRACKET FIX	1	100	411	
	49	08911-20810	NUT(FROM E/# R-40001)ALTERNATOR TO BRACKET FIX	1	50	411	N
	50	08915-43810	WASHER-PLAIN(FROM E/# R-40001)ALTERNATOR TO BRACKET FIX	1	50	411	

Printed in Japan

REVISED: SEPTEMBER,1968

NOTE

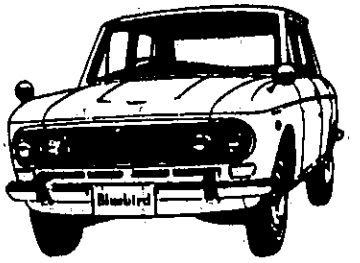

NOTE

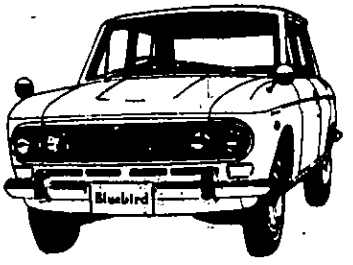

STARTER MOTOR (HITACHI)

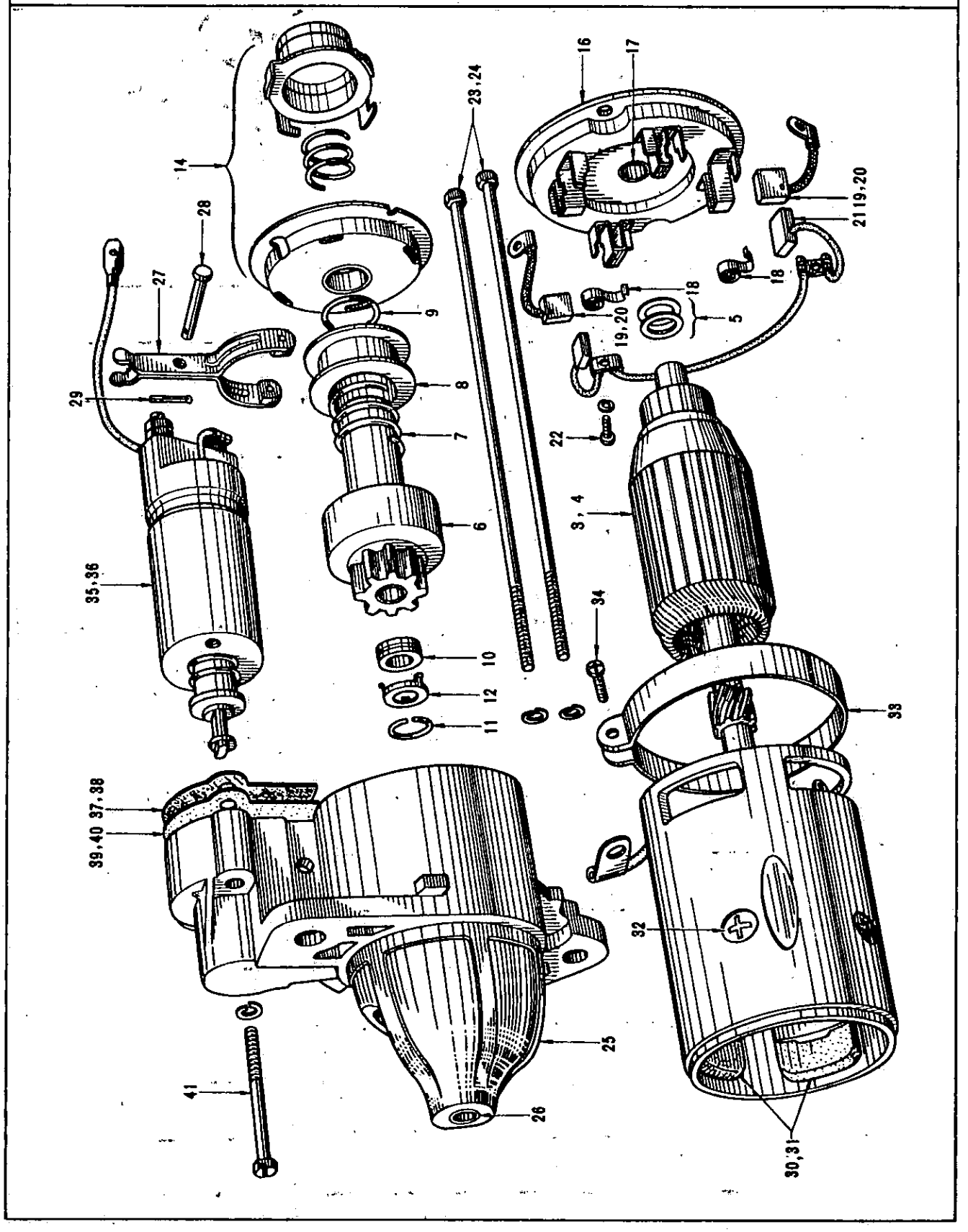

STARTER MOTOR (HITACHI)

S	KEY NO.	PART NO.	PART NAME	QTY	SALES UNIT	MODEL	ICA
	1	23300-10600	ASSY-MOTOR,STARTER	1		1.3L 411	
*	2	23300-15800	ASSY-MOTOR,STARTER	1	1	1.6L 411	
*	3	23310-10600	ASSY-ARMATURE	1	1	1.3L 411	
*	4	23310-15800	ASSY-ARMATURE	1	1	1.6L 411	
	5	23321-09900	WASHER-THRUST	2	10	411	
	6	23312-10600	ASSY-PINION	1	1	411	
	7	23442-10600	SPRING-PINION	1	5	411	
	8	23374-10600	SLEEVE-PINION	1		411	
	9	23372-10600	CLIP-SLEEVE PINION	1	10	411	
	10	23369-10600	STOPPER-PINION	1	5	411	
	11	23353-10600	CLIP-STOPPER PINION	1		411	
	12	23370-09600	WASHER-STOPPER PINION	1	10	411	
	13	23453-09500	SPRING-BRAKE	1	5	411	
	14	23383-10600	ASSY-BEARING,CENTER	1		411	
	15	23441-10600	METAL-BEARING	1	1	411	
	16	23337-10600	ASSY-COVER,REAT	1		411	
	17	23338-09900	METAL-BEARING	1	1	411	
	18	23333-09900	SPRING-BRUSH	4	10	411	
*	19	23380-09900	BRUSH(+)	2		411	
	20	23380-10600	BRUSH(+)	2	10	411	Y
	21	23379-09900	BRUSH(-)	2	10	411	
	22	23547-25660	SCREW 3	2	10	411	
	23	23340-10600	BOLT-THROUGH	2	10	1.3L 411	

Printed in Japan

REVISED: SEPTEMBER,1968

S	KEY NO.	PART NO.	PART NAME	Q'TY	SALES UNIT	MODEL	ICA
	24	23340-15800	BOLT-THROUGH	2	10	1.6L 411	
	25	23318-10600	ASSY-CASE,GEAR	1		411	
	26	23319-10600	METAL-BEARING	1	10	411	
	27	23322-10600	ASSY-LEVER,PINION SHIF T	1	1	411	
	28	23323-10600	PIN-LEVER SHIFT	1	10	411	
	29	23391-43300	PIN-COTTER 1	1	10	411	
	30	23306-10600	ASSY-COIL,FIELD	1	1	1.3L 411	
	31	23306-15800	ASSY-COIL,FIELD	1	1	1.6L 411	
	32	23305-09500	SCREW-SET,POLE CORE	4	10	411	
	33	23309-10600	ASSY-COVER,BRUSH	1	1	411	
*	34	23132-50900	SCREW 4	1		411	
	35	23343-10600	ASSY-SWITCH,MAGNETIC	1	1	1.3L 411	
*	36	23343-15800	ASSY-SWITCH,MAGNETIC	1	1	1.6L 411	
	37	23445-10600	COVER-DUST	1	10	1.3L 411	
	38	23445-15800	COVER-DUST	1	10	1.6L 411	
	39	23446-10600	PACKING	1	5	1.3L 411	
	40	23446-15800	PACKING	1	10	1.6L 411	
	41	22201-10600	BOLT 5	2	10	411	

Printed in Japan

REVISED: SEPTEMBER,1968

NOTE

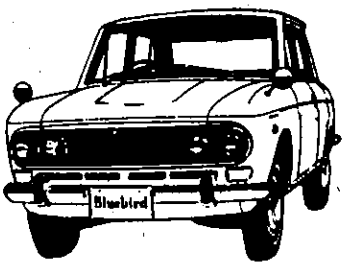

ELECTORICAL PARTS MOUNTING (1.3 L)

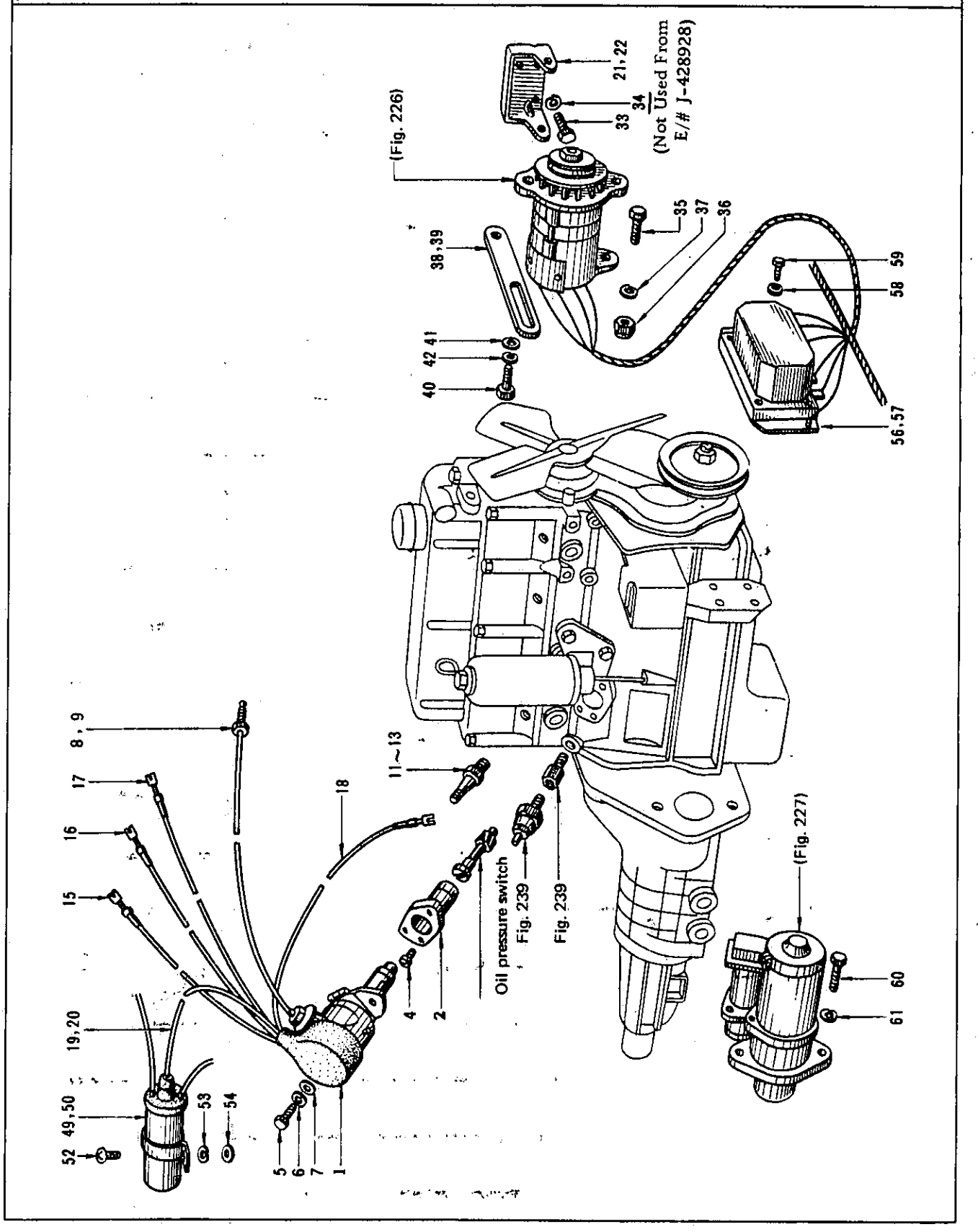

SEPTEMBER, 1968 Printed in Japan

ELECTORICAL PARTS MOUNTING (1.3 L)

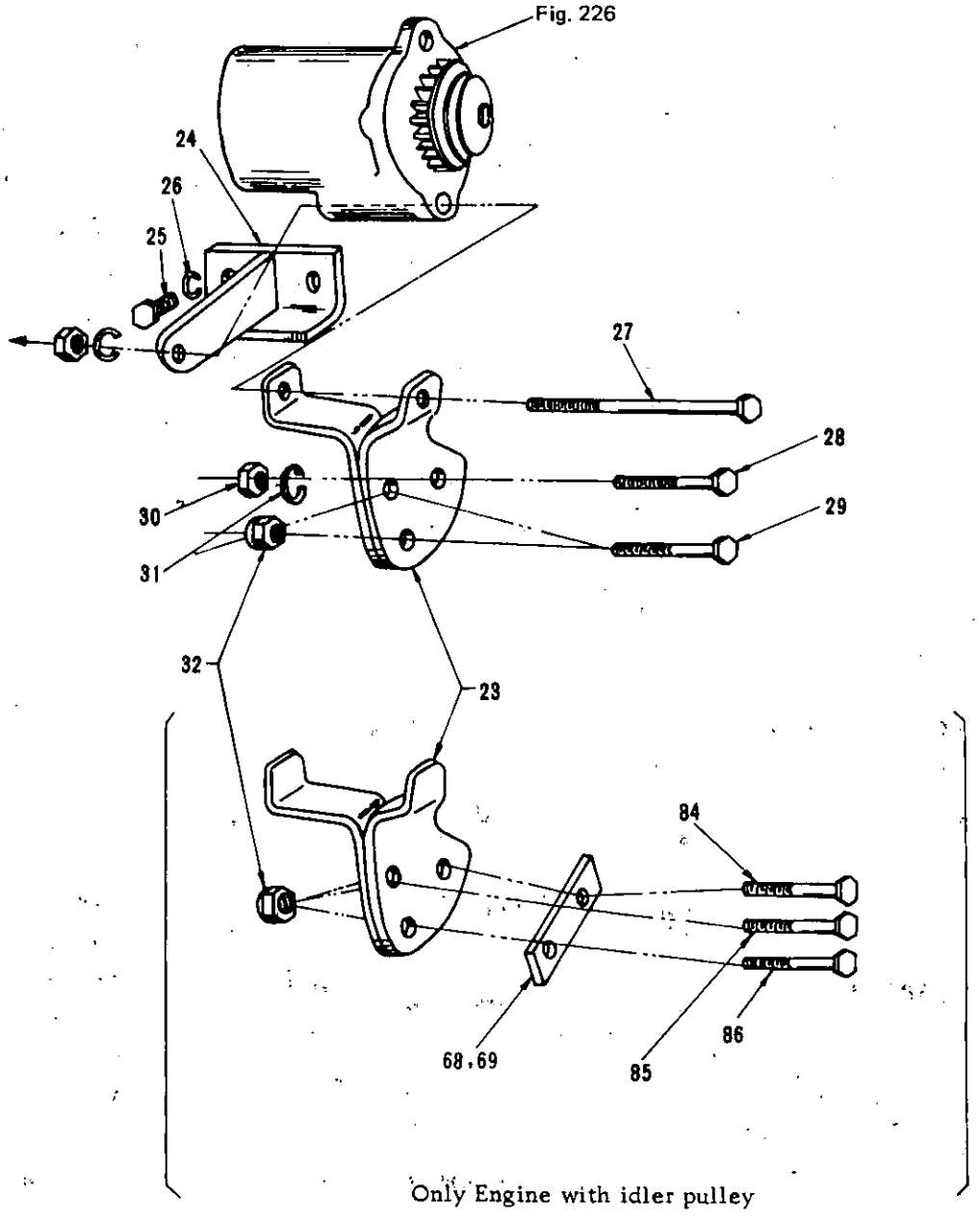

S	KEY NO.	PART NO.	PART NAME	Q'TY	SALES UNIT	MODEL	ICA
			ELECTORICAL PARTS MOUNTING (1.3 L)				
	1	22172-30100	PROTECTOR-DISTRIBUTOR	1	5	1.3L 411	
	2	22178-13200	SUPPORT-DISTRIBUTOR	1	10	1.3L 411	
	3	22179-10600	GASKET-DISTRIBUTOR SUPPORT	1	50	1.3L 411	
	4	00324-41610	SCREW(HOUSING TO CRANK CASE)	1	50	1.3L 411	
	5	00114-42010	BOLT TO FIX DISTRIBUTOR TO HOUSING	2	10	1.3L 411	
	6	00915-11410	WASHER-LOCK TO FIX DISTRIBUTOR TO HOUSING	2		1.3L 411	
	7	00915-41410	WASHER-PLAIN TO FIX DISTRIBUTOR TO HOUSING	2		1.3L 411	
	8	22318-13200	ASSY-TUBE,VACUUM CONTROL	1	1	1.3L 411	
	9	22318-14400	ASSY-TUBE,VACUUM CONTROL	1	5	UTK 411	
	10	22208-13200	ADJUSTER-ECCENTRIC ADVANCE	1	10	1.3L 411	
	11	22401-58000	PLUG-SPARK(N.G.K.B-6E)(STANDARD)	4		411	
	12	22401-58001	PLUG-SPARK(N.G.K.B-4E)(HOT TYPE)	4		411	
	13	22401-10605	PLUG-SPARK(N.G.K.B-7E)(COLD TYPE)	4		411	
	14	22450-13225	SET-CABLE,HIGH TENSION	1		1.3L 411	
	15	22451-13200	ASSY-CABLE,HIGH TENSION(NO.1)	1		1.3L 411	
	16	22452-13200	ASSY-CABLE,HIGH TENSION(NO.2)	1		1.3L 411	

Printed in Japan

REVISED: SEPTEMBER,1968

S	KEY NO.	PART NO.	PART NAME	Q'TY	SALES UNIT	MODEL	ICA
	17	22453-13200	ASSY-CABLE,HIGH TENSION(NO.3)	1		1.3L 411	
	18	22454-13200	ASSY-CABLE,HIGH TENSION(NO.4)	1		1.3L 411	
*	19	22450-13200	ASSY-CABLE,HIGH TENSION COIL TO DISTRIBUTOR(470MM)	1		1.3L 411	
	20	22450-14800	ASSY-CABLE,HIGH TENSION COIL TO DISTRIBUTOR(490MM)	1		1.3L 411	Y
	21	23168-10600	BRACKET-MOUNTING,ALTERNATOR(490MM)	1	5	1.3L 411	
	22	23168-13200	BRACKET-MOUNTING,ALTERNATOR(USED FOR OPTIONAL ALTERNATOR)	1	1	OP.1.3L 411	
	23	11710-13201	BRACKET-MOUNTING,ALTERNATOR(FROM E/# J-227250)	1		1.3L 411	
	24	11711-13201	BRACKET-MOUNTING,ALTERNATOR(FROM E/# J-227250)	1	10	1.3L 411	
	25	00134-51810	BOLT TO FIX ALTERNATOR FROM E/# J-227250	2	50	1.3L 411	
	26	00915-11510	WASHER TO FIX ALTERNATOR FROM E/# J-227250	2		1.3L 411	
	27	11712-13200	BOLT FOR THE ALTERNATOR WITHOUT IDLER PULLEY FROM E/# J-227250	1		1.3L 411	
	28	00114-52510	BOLT FOR THE ALTERNATOR WITHOUT IDLER PULLEY FROM E/# J-227250	1	50	1.3L 411	
	29	00134-53510	BOLT FOR THE ALTERNATOR WITHOUT IDLER PULLEY FROM E/# J-227250	2		1.3L 411	
	30	00911-14510	NUT FOR THE ALTERNATOR WITHOUT IDLER PULLEY FROM E/# J-227250	2		1.3L 411	

Printed in Japan

REVISED: SEPTEMBER,1968

S	KEY NO.	PART NO.	PART NAME	QTY	SALES UNIT	MODEL	ICA
	31	00915-11510	WASHER FOR THE ALTERNATOR WITHOUT IDLER PULLEY FROM E/# J-227250	2		1.3L 411	
	32	00912-44510	NUT FOR THE ALTERNATOR WITHOUT IDLER PULLEY FROM E/# J-227250	2	50	1.3L 411	
	33	00134-51810	BOLT TO FIX BRACKET	3	50	1.3L 411	
	34	00915-11510	WASHER-LOCK(NOT USED FROM E/# J-428928)TO FIX BRACKET	3		1.3L 411	
	35	00134-53010	BOLT TO FIX ALTERNATOR TO BRACKET	2	100	1.3L 411	
	36	00911-24510	NUT TO FIX ALTERNATOR TO BRACKET	2	100	1.3L 411	
	37	00915-11510	WASHER-LOCK TO FIX ALTERNATOR TO BRACKET	2		1.3L 411	
	38	23174-10600	BAR-ADJUSTING,ALTERNATOR	1	5	1.3L 411	
	39	23174-13200	BAR-ADJUSTING,ALTERNATOR(USED FOR OPTIONAL ALTERNATOR)	1	1	OP.1.3L 411	
	40	00134-52510	BOLT TO FIX BAR	1	100	1.3L 411	
	41	00915-51510	WASHER-PLAIN TO FIX BAR	1	50	1.3L 411	
	42	00915-11510	WASHER-LOCK TO FIX BAR	1		1.3L 411	
*	43	22450-17000	ASSY-CABLE,HIGH TENSION COIL TO DISTRIBUTOR(470MM)	1		1.3L 411	
	44	22450-14900	ASSY-CABLE,HIGH TENSION COIL TO DISTRIBUTOR(490MM)(ANTI-NOISECABLE)	1		OP.1.3L 411	
	45	22451-17000	ASSY-CABLE,HIGH TENSION(NO.1)	1		1.3L 411	
	46	22452-17000	ASSY-CABLE,HIGH TENSION(NO.2)	1		1.3L 411	

Printed in Japan

REVISED: SEPTEMBER,1968

S	KEY NO.	PART NO.	PART NAME	Q'TY	SALES UNIT	MODEL	ICA
	47	22453-17000	ASSY-CABLE,HIGH TENSION(NO.3)	1		1.3L 411	
	48	22454-17000	ASSY-CABLE,HIGH TENSION(NO.4)	1		1.3L 411	
*	49	22433-14900	COIL-IGNITION(12V,HITACHI)	1	1	1.3L 411	
*	50	22433-14400	COIL-IGNITION(12V,HITACHI)	1	1	UTK 411	
	51	22460-14400	RESISTOR-IGNITION COIL	1	1	UTK 411	
	52	00314-41210	SCREW TO FIX IGNITION COIL	2	50	1.3L 411	
	53	00915-11410	WASHER-LOCK TO FIX IGNITION COIL	2		1.3L 411	
	54	00915-41410	WASHER-PLAIN TO FIX IGNITION COIL	2		1.3L 411	
	55	24023-10605	ASSY-CABLE	1	1	UTK 411	
*	56	23500-16510	REGULATOR-VOLTAGE(MITSUBISHI)	1	1	1.3L 411	
*	57	23500-16513	REGULATOR-VOLTAGE(MITSUBISHI)	1	1	1.3L 411	Y
	58	00915-11410	WASHER-LOCK TO FIX REGULATOR DASH PANEL	2		1.3L 411	
	59	00314-41610	SCREW TO FIX REGULATOR DASH PANEL	2	50	1.3L 411	
	60	00124-63510	BOLT TO FIX STARTER MOTOR	2	25	1.3L 411	
	61	00915-21610	WASHER TO FIX STARTER MOTOR	2		1.3L 411	
	62	22005-16510	SET-IGNITION,TRANSISTOR(MITSUBISHI)	1	1	OP.1.3L 411	
	63	22005-16500	SET-IGNITION,TRANSISTOR(HITACHI)	1	1	OP.1.3L 411	
	64	23174-10800	BAR-ADJUSTING,GENERATOR	1	1	OP.411	

Printed in Japan

REVISED: SEPTEMBER.1968

S	KEY NO.	PART NO.	PART NAME	Q'TY	SALES UNIT	MODEL	ICA
	65	00134-52510	BOLT	1	100	OP.411	
	66	00915-51510	WASHER-PLAIN	1	50	OP.411	
	67	00915-11510	WASHER-LOCK	1		OP.411	
	68	21121-10801	SPACER-BRACKET,IDLER PULLEY(TO E/# J-227249)	1	5	OP.411	
	69	21121-13900	SPACER-BRACKET,IDLER PULLEY FOR 2SMB(50A)BATTERY(FROM E/# J-227250)	1	1	OP.411	Y
	70	21110-10801	ASSY-PULLY,IDLER	1	10	OP.411	
	71	21112-10801	SHAFT-IDLER PULLEY	1	5	OP.411	
	72	21113-10800	COLLAR-IDLER PULLEY	1		OP.411	
	73	21114-10801	BEARING-IDLER PULLEY	1		OP.411	
	74	21115-10800	STOPPER-BEARING	1	5	OP.411	
	75	21116-10800	WASHER-SPECIAL	1	10	OP.411	
	76	21120-10800	BRACKET-IDLER PULLEY	1	1	OP.411	
	77	00915-41610	WASHER-PLAIN	1		OP.411	
	78	00915-11610	WASHER-LOCK	1		OP.411	
	79	00911-34610	NUT	1	50	OP.411	
	80	21117-10800	PLATE-IDLER PULLEY,FRONT	1		OP.411	
	81	21118-10800	PLATE-IDLER PULLEY,REAR	1	5	OP.411	
	82	00134-54010	BOLT TO FIX BRACKET TO FRONT PLATE	1	50	OP.411	
	83	00912-44510	NUT TO FIX BRACKET TO FRONT PLATE	1	50	OP.411	
	84	00134-54010	BOLT TO FIX BRACKET(FROM E/# J-227250)	1	50	OP.411	
	85	00134-53510	BOLT TO FIX BRACKET(FROM E/# J-227250)	1		OP.411	

Printed in Japan

REVISED: SEPTEMBER,1968

S	KEY NO.	PART NO.	PART NAME	Q'TY	SALES UNIT	MODEL	ICA
	86	00134-54510	BOLT TO FIX BRACKET(FROM E/# J-227250)	1		OP.411	

Printed in Japan

REVISED: SEPTEMBER,1968

NOTE

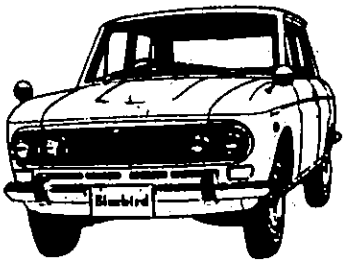

NOTE

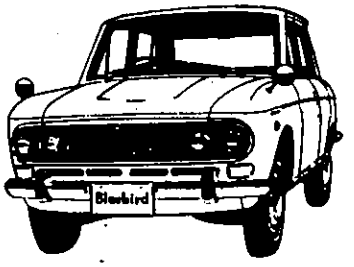

ELECTORICAL PARTS MOUNTING (1.6 L)

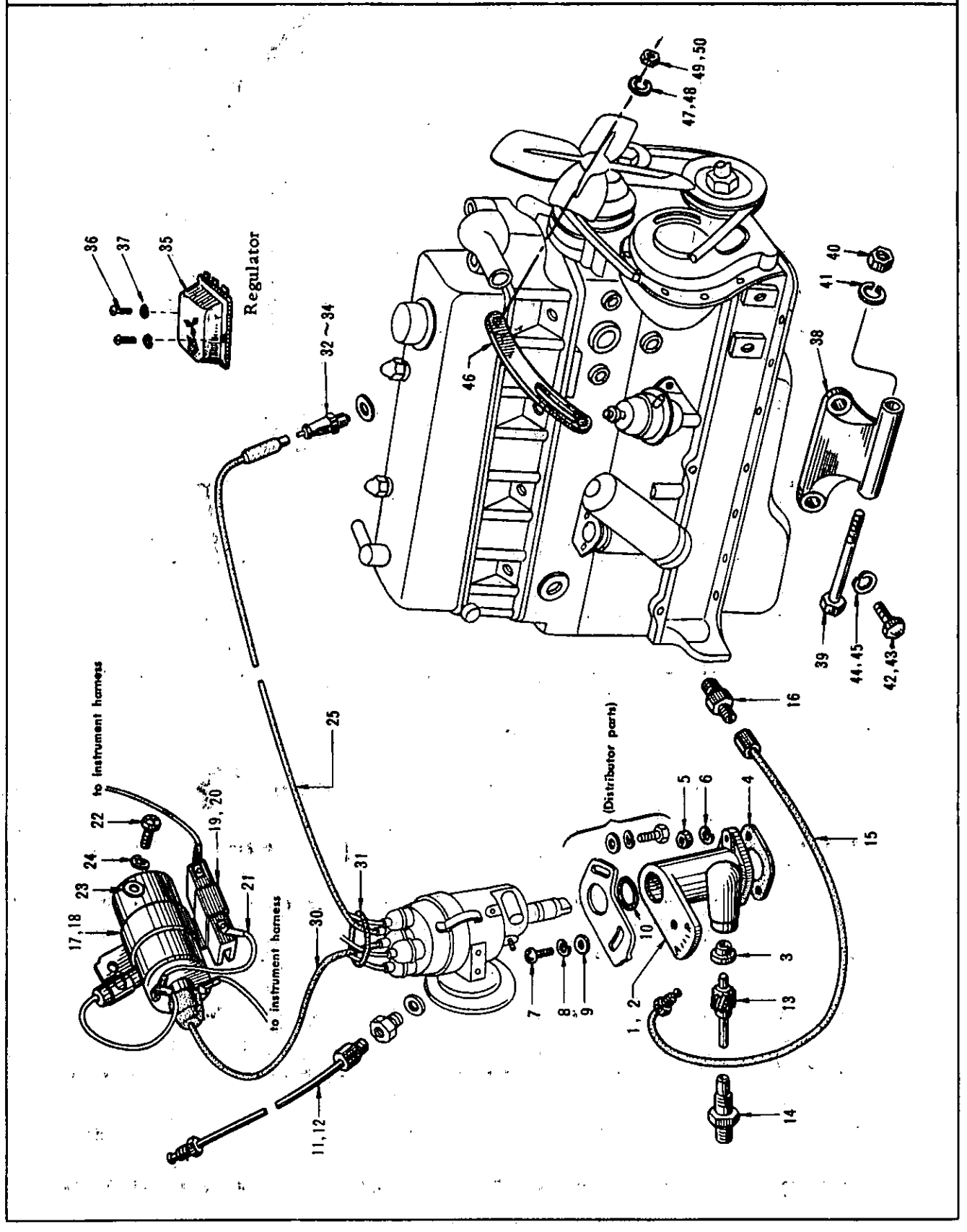

S	KEY NO.	PART NO.	PART NAME	Q'TY	SALES UNIT	MODEL	ICA
			ELECTORICAL PARTS MOUNTING (1.6 L)				
*	1	22178-14600	SUPPORT-DISTRIBUTOR	1	10	1.6L 411	
	2	22177-18810	SUPPORT-DISTRIBUTOR(FROM E/# R-40001)	1	1	1.6L 411	N
	3	32706-26760	BUSHING-SPEEDOMETER DRIVE PINION	1		1.6L 411	
	4	22179-32200	PACKING-DISTRIBUTOR	1		1.6L 411	
	5	00911-24410	NUT FIXING DISTRIBUTOR SUPPORT	2		1.6L 411	
	6	00915-11310	WASHER-LOCK FIXING DISTRIBUTOR SUPPORT	2		1.6L 411	
	7	00367-41210	SCREW	1	50	1.6L 411	
	8	00915-11410	WASHER-LOCK	1		1.6L 411	
	9	00915-41410	WASHER-PLAIN	1		1.6L 411	
	10	22180-71200	RING-O,DISTRIBUTOR SUPPORT	1	5	1.6L 411	
	11	22318-12200	ASSY-TUBE,CONDUIT,VACUUM,CONTROL	1	5	1.6L 411	
	12	22318-12201	ASSY-TUBE,CONDUIT,VACUUM,CONTROL	1	1	1.6L 411	Y
	13	22951-10400	PINION-DRIVE,TACHOMETER	1	5	1.6L 411	
	14	32707-32200	ASSY-SLEEVE,SPEEDOMETER PINION	1	5	1.6L 411	
*	15	22952-10401	ASSY-TUBE,OIL FEED,TACHOMETER DRIVE	1	5	1.6L 411	
	16	22954-10400	CONNECTOR-OIL FEED,TACHOMETER DRIVE	1	2	1.6L 411	
	17	22433-14600	COIL-IGNITION(HITACHI)	1		1.6L 411	
*	18	22433-14400	COIL-IGNITION(HANSHIN)	1	1	1.6L 411	

REVISED: SEPTEMBER,1968

Printed in Japan

S	KEY NO.	PART NO.	PART NAME	Q'TY	SALES UNIT	MODEL	ICA
	19	22460-14600	RESISTOR-IGNITION COIL (HITACHI)	1		1.6L 411	
	20	22460-14400	RESISTOR-IGNITION COIL (HANSHIN)	1	1	1.6L 411	
	21	24016-14600	ASSY-CABLE,IGNITION	1		1.6L 411	
	22	00314-41210	SCREW	2	50	1.6L 411	
	23	00915-51410	WASHER-PLAIN FIXING COIL TO BODY	2		1.6L 411	
	24	00915-51410	WASHER-LOCK FIXING COIL TO BODY	2		1.6L 411	
	25	22450-38725	SET-CABLE,HIGH TENSION	1		1.6L 411	
	26	22451-38700	ASSY-CABLE,HIGH TENSION(NO.1)	1	5	1.6L 411	
	27	22452-38700	ASSY-CABLE,HIGH TENSION(NO.2)	1	5	1.6L 411	
	28	22453-38700	ASSY-CABLE,HIGH TENSION(NO.3)	1	5	1.6L 411	
	29	22454-38700	ASSY-CABLE,HIGH TENSION(NO.4)	1	5	1.6L 411	
	30	22450-38700	ASSY-CABLE,HIGH TENSION(COIL TO DISTRIBUTOR)	1		1.6L 411	
	31	22431-10560	RING-HIGH TENSION CABLE	1	10	1.6L 411	
	32	22401-58000	PLUG-SPARK(N.G.K.)(B-6E)(STANDARD)	4		1.6L 411	
	33	22401-58001	PLUG-SPARK(N.G.K.)(B-4E)(HOT TYPE)	4		1.6L 411	
	34	22401-10605	PLUG-SPARK(N.G.K.)(B-7E)(COLD TYPE)	4		1.6L 411	
	35	23500-16510	REGULATOR-VOLTAGE(MITSUBISHI)	1	1	1.6L 411	
	36	00314-41610	SCREW FIXING VOLTAGE REGULATOR	2	50	1.6L 411	

Printed in Japa

REVISED: SEPTEMBER,1968

S	KEY NO.	PART NO.	PART NAME	Q'TY	SALES UNIT	MODEL	ICA
	37	00915-11410	WASHER-LOCK FIXING VOL TAGE REGULATOR	2		1.6L 411	
	38	23168-15800	ASSY-BRACKET,ALTERNATO R MOUNTING	1	1	1.6L 411	
	39	23139-12900	BOLT FIXING ALTERNATOR TO BRACKET	1	10	1.6L 411	
	40	00911-24510	NUT FIXING ALTERNATOR TO BRACKET	1	100	1.6L 411	
	41	00915-11510	WASHER-LOCK FIXING ALT ERNATOR TO BRACKET	1		1.6L 411	
	42	00131-62510	BOLT(TO E/# R-40000) F IXING BRACKET TO CYLIN DER BLOCK	2		1.6L 411	
	43	08931-02510	BOLT(FROM E/# R-40001) FIXING BRACKET TO CYL INDER BLOCK	2		1.6L 411	N
	44	00915-21610	WASHER-LOCK(TO E/# R-4 0000)	2		1.6L 411	
	45	08915-24010	WASHER-LOCK(FROM E/# R -40001)	2	50	1.6L 411	N
	46	23174-15800	BAR-ADJUSTING,ALTERNAT OR	1	5	1.6L 411	
	47	00915-11610	WASHER-LOCK(TO E/# R-4 0000)	1		1.6L 411	
	48	08915-14010	WASHER-LOCK(FROM E/# R -40001)FIXING BAR TO C YLINDER HEAD	1	50	1.6L 411	N
	49	00911-24610	NUT(TO E/# R-40000) FI XING BAR TO CYLINDER H EAD	1	100	1.6L 411	
	50	08911-24010	NUT(FROM E/# R-40001)	1		1.6L 411	N

Printed in Japan

REVISED: SEPTEMBER,1968

NOTE

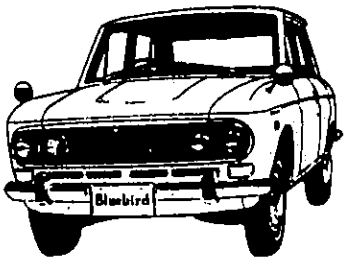

NOTE

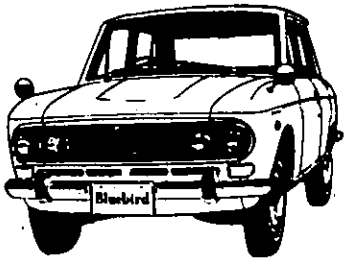

WIRING

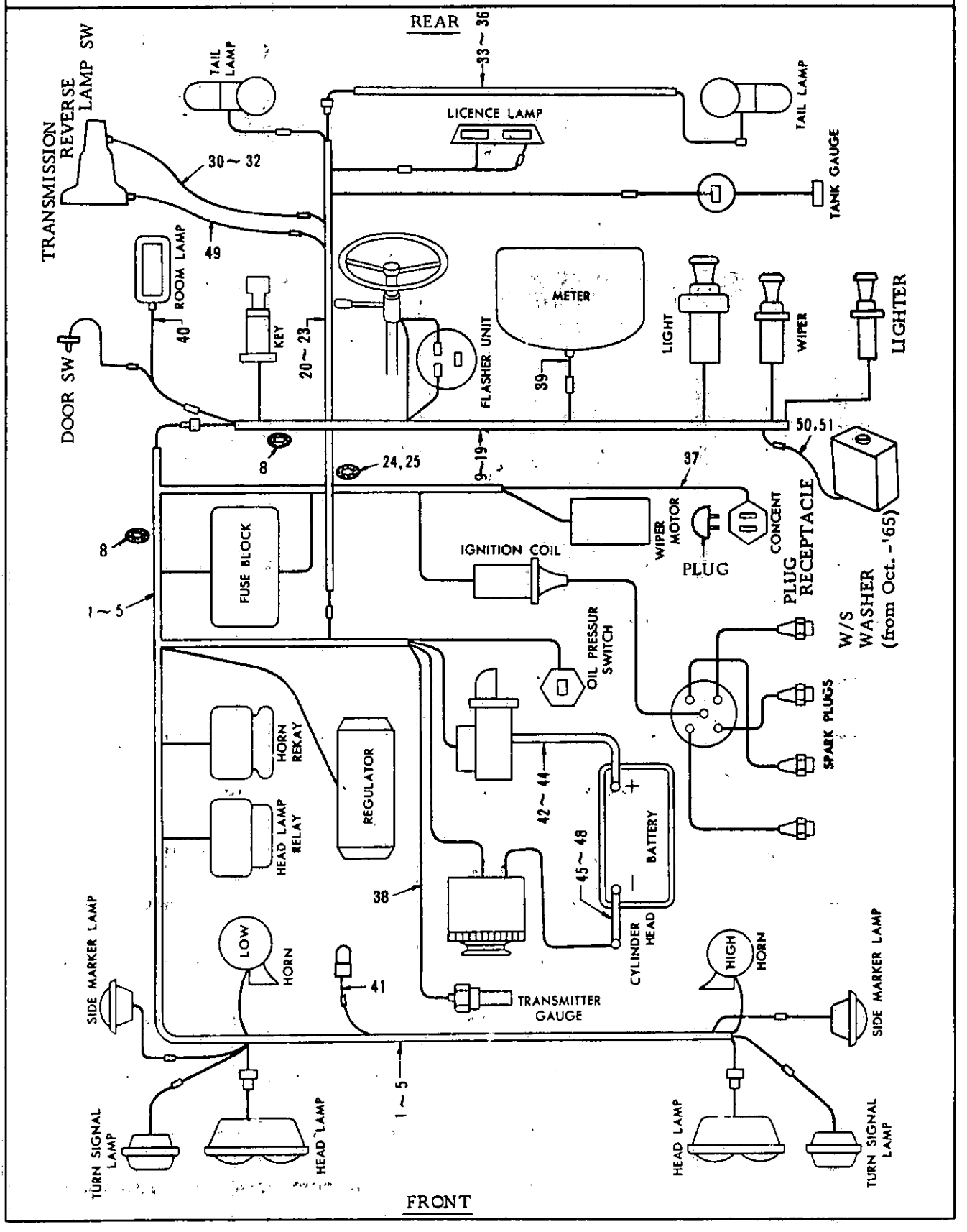

SEPTEMBER, 1968 Printed in Japan

S	KEY NO.	PART NO.	PART NAME	Q'TY	SALES UNIT	MODEL	ICA
			WIRING				
	1	24012-16500	COMP.-CABLE,ENGINE ROOM HARNESS	1	1	1.3L 411 (EXC.FINLAND)	
	2	24012-16520	COMP.-CABLE,ENGINE ROOM HARNESS	1	1	OP.1.3L 411	
	3	24012-15800	COMP.-CABLE,ENGINE ROOM HARNESS	1	1	1.6L 411	
	4	24012-15820	COMP.-CABLE,ENGINE ROOM HARNESS	1		OP.1.6L 411	
	5	24012-17100	COMP.-CABLE,ENGINE ROOM HARNESS	1		LUT 411 (FINLAND ONLY)	
	6	24012-24510	ASSY-HARNESS,ENGINE ROOM	1	1	OP. 1.6L L DRIVE 411	
	7	24012-15810	ASSY-HARNESS,ENGINE ROOM	1	1	OP. 1.6L L DRIVE 411	
	8	24252-10600	GROMMET-RUBBER	1	5	411	
	9	24013-16500	COMP.-CABLE,INSTRUMENT HARNESS (TO SEP-66)	1		R DRIVE 3 SPEED 411	
	10	24013-24000	COMP.-CABLE,INSTRUMENT HARNESS (FROM OCT.-66)	1	1	R DRIVE 411	N
	11	24013-16900	COMP.-CABLE,INSTRUMENT HARNESS	1		R DRIVE,4 SPEED 411	
	12	24013-24500	COMP.-CABLE,INSTRUMENT HARNESS	1	1	1.6L 411	
	13	24013-24520	COMP.-CABLE,INSTRUMENT HARNESS	1		OP. 1.6L 411	
	14	24013-17100	COMP.-CABLE,INSTRUMENT HARNESS	1	1	LUT,WLUT 411	
	15	24013-17101	COMP.-CABLE,INSTRUMENT HARNESS (TO SEP-66)	1		FINLAND	

Printed in Japan

REVISED: SEPTEMBER,1968

S	KEY NO.	PART NO.	PART NAME	QTY	SALES UNIT	MODEL	ICA
	16	24013-18702	COMP.-CABLE,INSTRUMENT HARNESS (FROM OCT.-66)	1	1	411 FINLAND	N
	17	24013-17000	COMP.-CABLE,INSTRUMENT HARNESS	1	1	L DRIVE 411 (EXC.FINLAND)	
	18	24013-18701	COMP.-CABLE,INSTRUMENT HARNESS(FROM 66-OCT.)	1	1	L DRIVE 411 (EXC.FINLAND)	N
	19	24013-18720	COMP.-CABLE,INSTRUMENT HARNESS(FROM 66-OCT.)	1		OP.L DRIVE 411	
	20	24014-10601	COMP.-CABLE,CHASSIS HARNESS	1		411 (EXC.WAGON)	
	21	24014-18400	COMP.-CABLE,CHASSIS HARNESS (FROM 66-APR.)	1		411 (EXC.WAGON)	N
	22	24014-10601	COMP.-CABLE,CHASSIS HARNESS	1		WAGON 411	
	23	24014-19600	COMP.-CABLE,CHASSIS HARNESS (FROM 66-APR.)	1		WAGON 411	N
	24	24254-10600	GROMMET-RUBBER (FOR CHASSIS HARNESS)	1	10	411	
	25	24250-89915	GROMMET-RUBBER (FOR CHASSIS HARNESS) (FROM 66-APR.)	1	10	411	Y
	26	00369-01210	SCREW FOR CHASSIS HARNESS EARTH	1	50	411	
	27	00915-11010	WASHER-LOCK FOR CHASSIS HARNESS EARTH	1	100	411	
	28	24253-10600	GROMMET-RUBBER	1	10	411	
*	29	24051-02700	INSULATOR-COWL,GUM	1	50	SEDAN 411	
	30	24149-12400	ASSY-CABLE,REVERSE LAMP SWITCH	1		4 SPEED 411	
	31	24149-15800	ASSY-CABLE,REVERSE LAMP SWITCH (FROM 65-OCT.)	1		4 SPEED 411	N

Printed in Japan

REVISED: SEPTEMBER,1968

S	KEY NO.	PART NO.	PART NAME	Q'TY	SALES UNIT	MODEL	ICA
	32	24149-18800	ASSY-CABLE,REVERSE LAMP SWITCH (FROM 66-APR.)	1		4 SPEED 411	N
	33	24015-10600	COMP-CABLE,COMBINATION LAMP	1		SEDAN 411	
	34	24015-10600	COMP.-CABLE,TAIL HARNESS	1		WAGON 411	
	35	24016-10900	COMP.-CABLE,COMBINATION LAMP	1	1	WAGON 411	
	36	24015-10900	COMP.-CABLE,TAIL HARNESS	1		WAGON 411	Y
	37	24175-11500	ASSY-CABLE,CONCENT	1		OP.411	
	38	24038-15800	CABLE-THERMAL TRANSMITTER	1		1.6L 411	
*	39	25035-10600	ASSY-CABLE,METER HARNESS	1	1	ALL 411	
	40	24163-11400	ASSY-CABLE,DOOR SWITCH	1		ALL 411	
	41	24141-10600	ASSY-CABLE,INSPECTION LAMP	1		ALL 411	
	42	24110-16500	ASSY-CABLE,STARTER MOTOR	1		1.3L 411	
	43	24110-18800	ASSY-CABLE,STARTER MOTOR TO BATTERY	1	1	1.6L 411	
	44	24110-18810	ASSY-CABLE,STARTER MOTOR TO BATTERY	1		OP.1.6L L DRIVE 411	
	45	24080-16500	ASSY-CABLE,BATTERY	1		UTK 411	
	46	24080-17000	ASSY-CABLE,BATTERY	1		1.3L 411	
	47	24080-18800	ASSY-CABLE,BATTERY,GROUND CONNECTION	1	1	1.6L 411	
	48	24080-18810	ASSY-CABLE,BATTERY GROUND CONNECTION	1		OP.1.6L L DRIVE 411	
	49	24170-20200	CABLE-INHIBITER SW.	1		RL-UAK,WRL-UAK 411	

Printed in Japan

REVISED: SEPTEMBER,1968

S	KEY NO.	PART NO.	PART NAME	Q'TY	SALES UNIT	MODEL	ICA
	50	24025-24100	CABLE-W/S WASHER (FROM 66-OCT.)	1		R DRIVE 41 1	
	51	24025-18701	CABLE-W/S WASHER (FROM 66-OCT.)	1		L DRIVE 41 1	

Printed in Japan

REVISED: SEPTEMBER,1968

NOTE

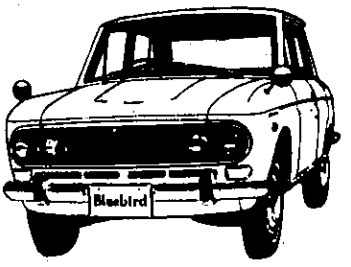

ELECTRIC UNIT

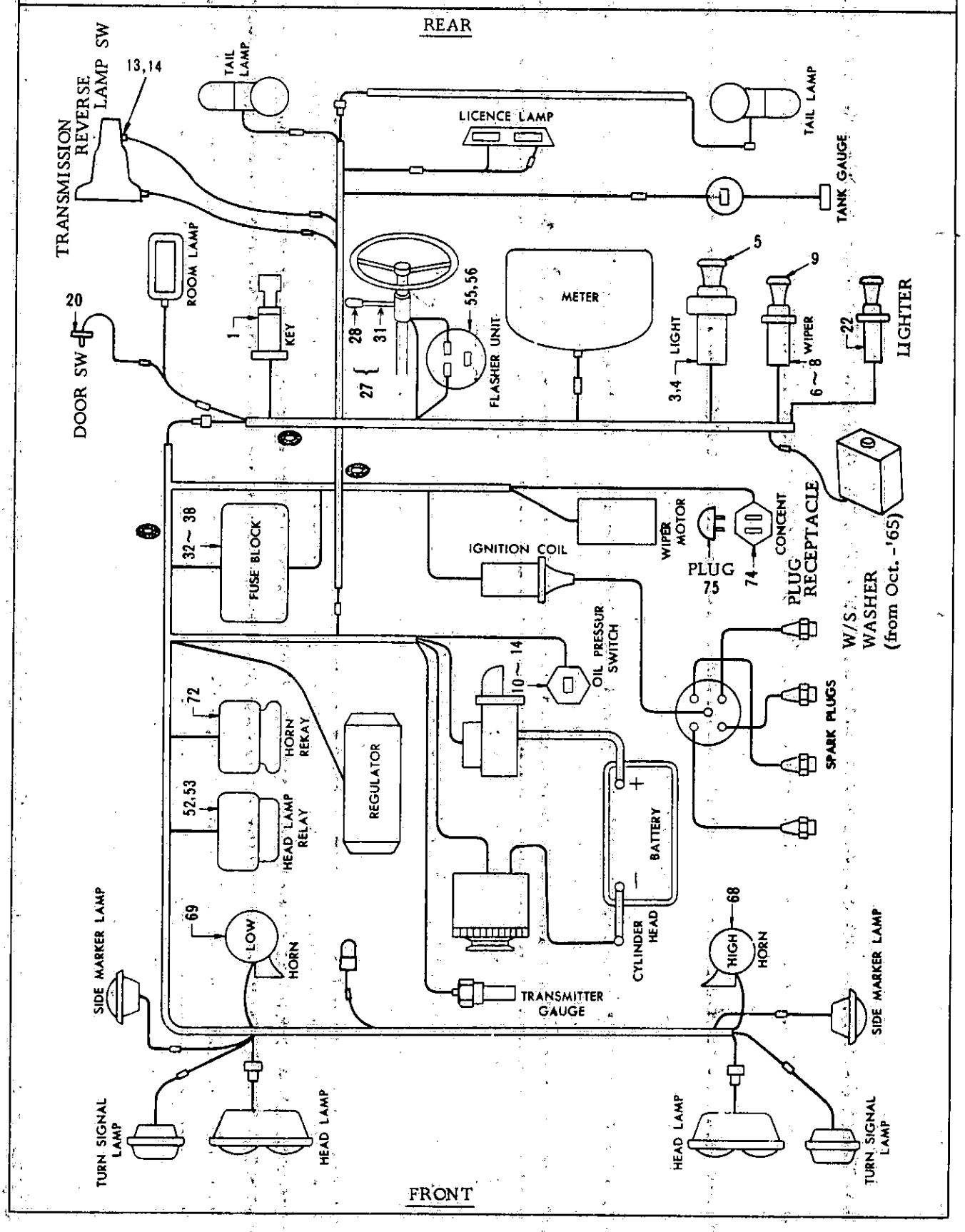

ERECTRIC UNIT

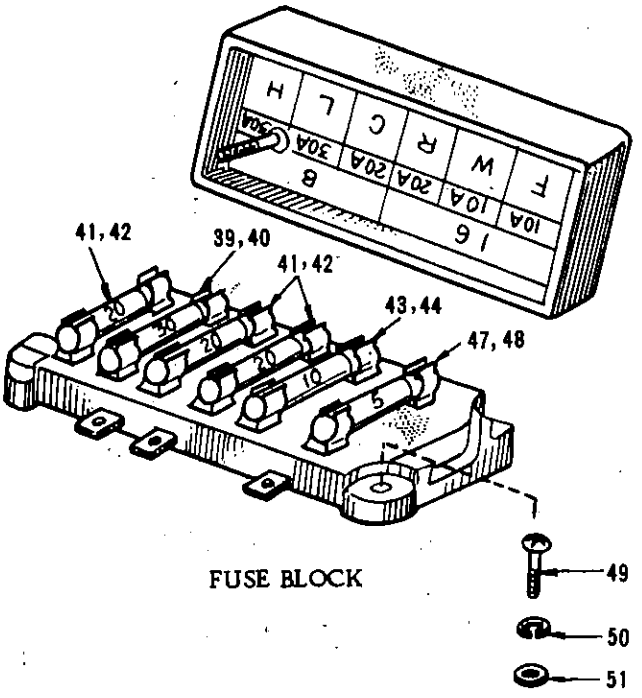

FUSE BLOCK

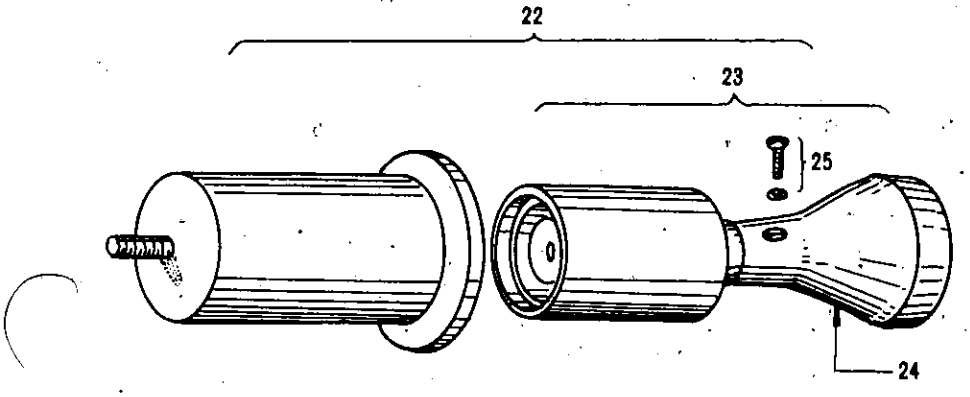

CIGARETTE LIGHTER

S	KEY NO.	PART NO.	PART NAME	QTY	SALES UNIT	MODEL	ICA
			ELECTRIC UNIT				
	1	25150-10600	COMP.-SWITCH,IGNITION & STARTER	1	1	411	
	2	84464-01301	ASSY-CYLINDER,LOCK	1	1	411	
	3	25160-13200	COMP.-SWITCH,LIGHTING (WITHOUT FOG LAMP SWIT CH)	1	1	411	
	4	25160-13201	COMP.-SWITCH,LIGHTING (WITH FOG LAMP SWITCH)	1	1	OP. 411	
	5	25165-13200	ASSY-KNOB,LIGHTING SWI TCH (BLACK)	1	1	411	
	6	25260-13200	COMP.-SWITCH,WINDSHIEL D WIPER (BLACK) (TO MA R-66)	1		411	
	7	25260-16500	COMP.-SWITCH,WINDSHIEL D WIPER (BLACK) (FROM APR.-66 TO SEP-66)	1	1	411	N
	8	25260-24100	COMP.-SWITCH,WIPER (FR OM OCT.-66)	1	1	411	N
	9	25265-13200	ASSY-KNOB,WIPER SWITCH (BLACK) (FROM OCT.-66)	1	5	411	
*	10	25240-89900	COMP.-SWITCH,OIL PRESS URE (TO MAR-66)	1		1.3L 411	
*	11	25240-89901	COMP.-SWITCH,OIL PRESS URE (FROM APR.-66)	1		1.3L 411 (EXC.UNK)	Y
	12	25070-15800	COMP.-SWITCH,OIL PRESS URE	1	1	1.6L 411	
	13	25310-11400	COMP.-SWITCH,REVERSE L AMP	1	10	3 SPEED 41 1	
	14	25310-14600	COMP.-SWITCH,REVERSE L AMP (FROM APR.-66)	1		4 SPEED 411	

Printed in Japan

REVISED: SEPTEMBER,1968

S	KEY NO.	PART NO.	PART NAME	QTY	SALES UNIT	MODEL	ICA
	15	25319-11400	ARM-OPERATING,REVERSE LAMP	1	10	3 SPEED 411	
	16	00314-01610	SCREW TO FIX ARM	1	10	3 SPEED 411	
	17	00915-11010	WASHER-LOCK TO FIX ARM	1	100	3 SPEED 41 1	
	18	25310-09500	COMP.-SWITCH,REVERSE L AMP	1	10	4 SPEED 41 1	
	19	25312-55100	WASHER-PLAIN	1	10	4 SPEED 41 1	
	20	25360-01300	COMP.-LIGHTER,DOOR	2		411	
	21	00540-41010	SCREW	4	50	411	
	22	25330-10600	COMP.-LIGHTER,CIGARETT E (BLACK)	1	10	OP. 411	
*	23	B5330-10601	ASSY-ELEMENT WITH KNOB	1	1	OP. 411	
	24	25335-10600	ASSY-KNOB,CIGARETTE LI GHTER (BLACK)	1	5	OP. 411	
	25	25169-89900	SET-SCREW & WASHER	1	10	OP. 411	
	26	25540-10600	COMP.-SWITCH,TURN SIGN AL & DIMMER	1		R DRIVE 41 1	
	27	25540-10800	COMP.-SWITCH,TURN SIGN AL & DIMMER	1	1	L DRIVE 41 1	
	28	25517-09400	CAP-TURN SIGNAL SWITCH	1	1	411	
	29	00314-00810	SCREW	2	50	411	
	30	00915-11010	WASHER-LOCK	2	100	411	
	31	25516-10601	LEVER-TURN SIGNAL SWIT CH	1	5	411	
*	32	25410-13200	ASSY-BLOCK,FUSE	1		411 (EXC.F INLAND)	
*	33	25410-16500	ASSY-BLOCK,FUSE (TO MA R-66)	1	1	411 (EXC.F INLAND)	Y
	34	25410-18400	ASSY-BLOCK,FUSE (FROM APR.-66)	1	1	411 (EXC.F INLAND)	N

Printed in Japan
REVISED: SEPTEMBER,1968

S	KEY NO.	PART NO.	PART NAME	QTY	SALES UNIT	MODEL	ICA
*	35	25410-10801	ASSY-BLOCK,FUSE (TO MAR-66)	1	1	LUT 411 (FINLAND ONLY)	
	36	25410-18401	ASSY-BLOCK,FUSE (FROM APR.-66)	1		LUT 411 (FINLAND ONLY)	Y
*	37	25410-10802	ASSY-BLOCK,FUSE (TO MAR-66)	1		LUT 411 (FINLAND ONLY)	
	38	25410-18402	ASSY-BLOCK,FUSE (FROM APR.-66)	1		LUT 411 (FINLAND ONLY)	Y
*	39	25463-50000	FUSE (30A) (TO MAR-66)	1		411	
	40	25463-89901	FUSE (30A) (S.A.E.) (FROM 66-APR.)	1		411	Y
*	41	25462-50000	FUSE (20A) (TO MAR-66)	3		411	
	42	25462-89901	FUSE (20A) (S.A.E.) (FROM 66-APR.)	3		411	Y
*	43	25467-30800	FUSE (8A) (TO MAR-66)	2		411	
	44	25461-89901	FUSE (10A) (S.A.E.) (FROM APR-66)	2		411	Y
*	45	25467-30800	FUSE (8A) (TO MAR-66)	5		411 FINLAND	
	46	25461-89901	FUSE (10A) (S.A.E.) (FROM APR-66)	5		411 FINLAND	Y
*	47	25468-58300	FUSE (5A) (TO MAR-66)	4	100	411 FINLAND	
	48	25475-89901	FUSE (5A) (S.A.E.) (FROM APR.-66)	4		411 FINLAND	Y
	49	00314-02210	SCREW TO FIX FUSE BLOCK TO DASH PANEL UPPER	2	50	411	
	50	00915-11010	WASHER-LOCK TO FIX FUSE BLOCK TO DASH PANEL UPPER	2	100	411	

REVISED: SEPTEMBER,1968

Printed in Japan

S	KEY NO.	PART NO.	PART NAME	Q'TY	SALES UNIT	MODEL	ICA
	51	00915-41010	WASHER-PLAIN TO FIX FUSE BLOCK TO DASH PANEL UPPER	2		411	
	52	25230-13200	COMP.-RELAY,LOWER BEAM	1	1	411	
	53	25230-89900	COMP.-RELAY,LOWER BEAM	1		411	Y
	54	00511-21010	SCREW (TO FIX RELAY)	2	50	411	
*	55	25520-13200	ASSY-FLASHER UNIT (12V-60W) (TO SEP-66)	1	10	411	
	56	25520-89900	ASSY-FLASHER UNIT (12V-60W) (FROM OCT.-66)	1	1	411	N
	57	25520-33500	ASSY-FLASHER UNIT (50W) (FROM OCT.-66)	1		411	
	58	25520-89901	ASSY-FLASHER UNIT AUDIBLE (50W) (FROM OCT.-66)	1	10	411 AUSTRALIA OP.ALL 411	
	59	00511-01010	SCREW (TO FLASHER UNIT)	1	50	411	
	60	25595-24000	KIT-FLASHER,4-WAY	1	1	OP.411	
	61	25596-24000	ASSY-LAMP,WARNING W/SWITCH	1	1	OP.411	
	62	25599-24000	BRACKET-FLASHER UNIT	1	1	OP.411	
	63	08360-52010	SCREW	4	50	OP.411	
	64	08915-43510	WASHER-PLAIN	4	50	OP.411	
	65	08911-10510	NUT	4		OP.411	
*	66	25520-89910	UNIT-FLASHER,4-WAY	1	1	OP. 411	
	67	00511-01010	SCREW-TAPPING	1	50	OP. 411	
	68	86310-89900	ASSY-HORN,ELECTRIC (HIGH)	1		411	
	69	86330-89900	ASSY-HORN,ELECTRIC (LOW)	1		411	
	70	00314-52210	BOLT TO FIX HORN	4	50	411	

REVISED: SEPTEMBER,1968

Printed in Japan

S	KEY NO.	PART NO.	PART NAME	Q'TY	SALES UNIT	MODEL	ICA
	71	00915-11510	WASHER-LOCK TO FIX HORN	4		411	
	72	26320-89900	ASSY-RELAY,HORN (12V)	1	1	411	
	73	00511-21010	SCREW (TO FIX HORN RELAY)	2	50	411	
	74	24190-11500	ASSY-CONCENT	1	10	OP.411	
	75	24195-11500	ASSY-PLUG,CONCENT	1	5	OP.411	

Printed in Japan

REVISED: SEPTEMBER,1968

NOTE

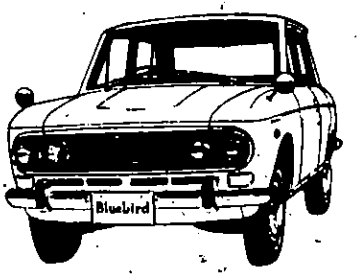

ROOM HEATER

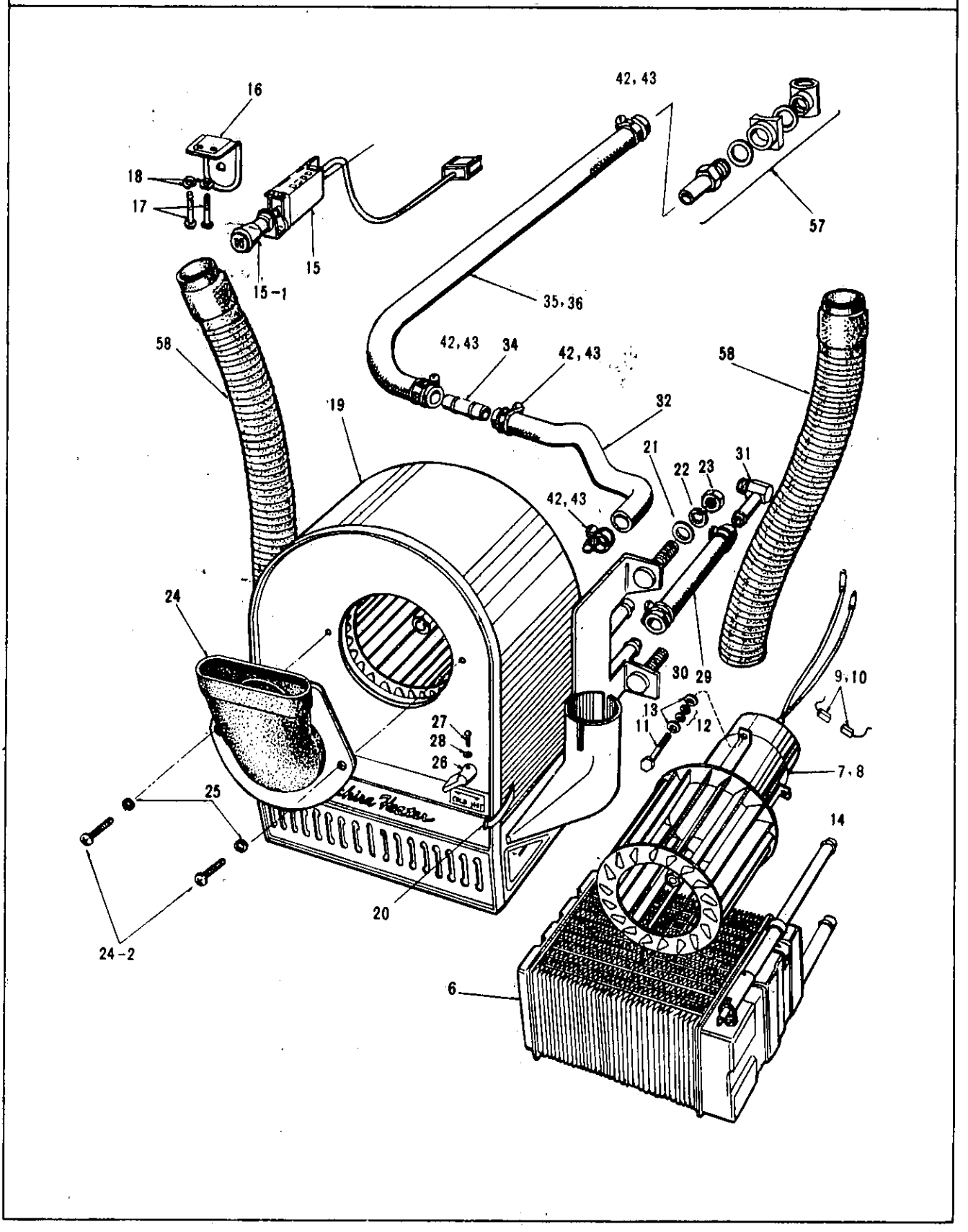
16
18
17
15
15-1
42, 43
57
35, 36
58
42, 43
34
42, 43
58
19
32
21
22
23
31
42, 43
24
30
29
9, 10
13
11
12
27
28
26
7, 8
25
14
20
24-2
6

ROOM HEATER

411 (From Apr.-'66)

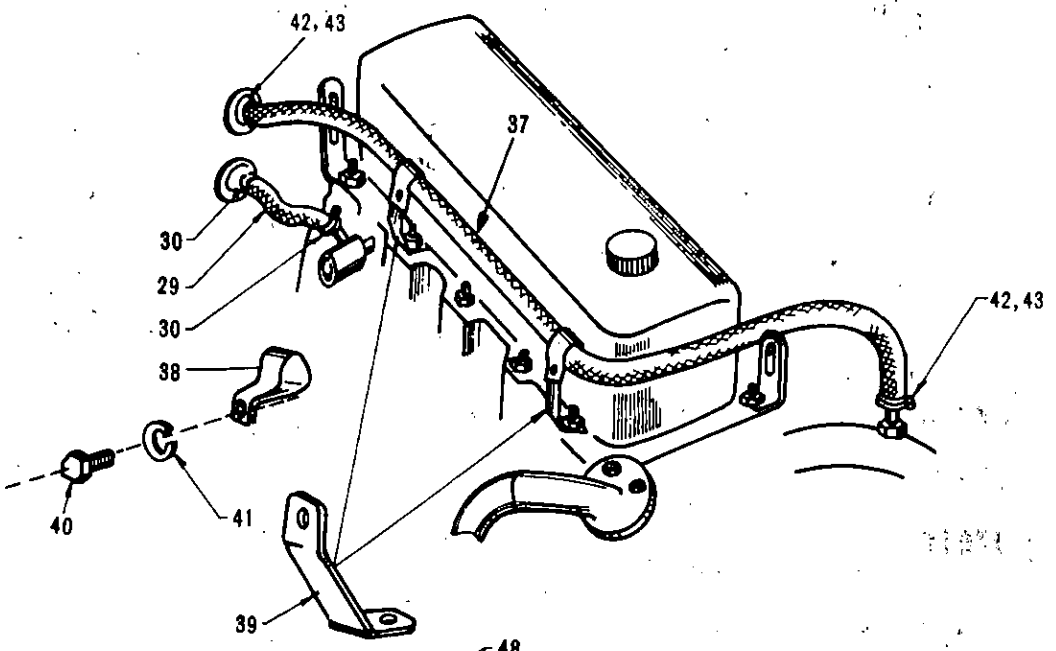

R411 (1.6 ℓ)

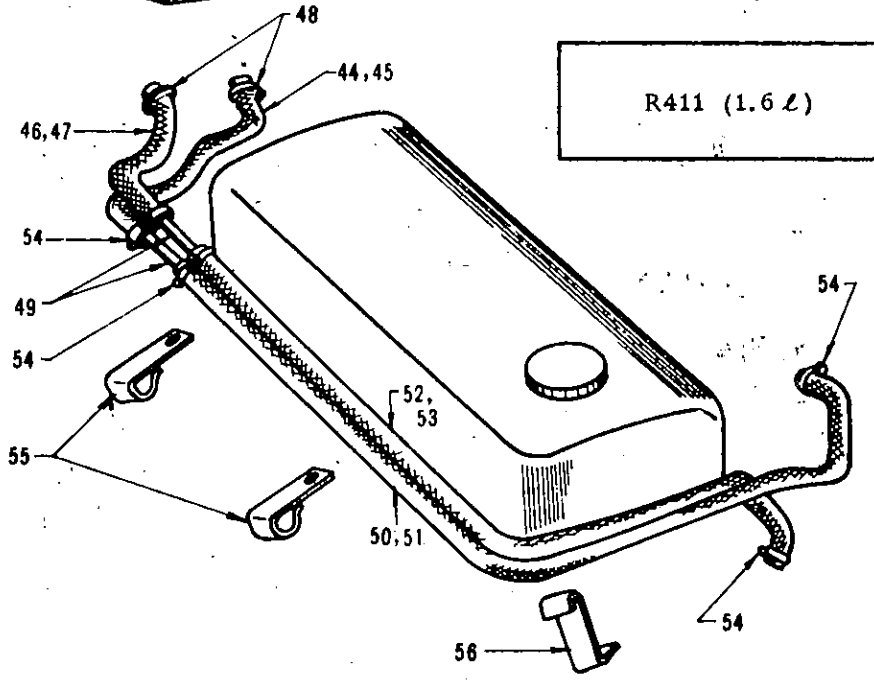

S	KEY NO.	PART NO.	PART NAME	Q'TY	SALES UNIT	MODEL	ICA
			ROOM HEATER				
	1	27010-16500	KIT-HEATER,ROOM (TO MAR.-66)	1		OP.R DRIVE 411	
	2	27010-18400	KIT-HEATER,ROOM (FROM APR-66)	1	1	OP.R DRIVE 411	N
	3	27010-17001	KIT-HEATER,ROOM (TO MAR.-66)	1		OP.L DRIVE 411	
*	4	27010-18500	KIT-HEATER,ROOM (FROM APR-66.)	1	1	OP.L DRIVE 411 (EXC. 1.6L)	N
	5	27010-18801	KIT-HEATER,ROOM	1	1	1.6L 411	
	6	27015-11400	ASSY-CORE	1	1	411	
	7	B7010-13602	ASSY-MOTOR WITH NUT 12 V-30W FOR PLASTIC FAN	1	1	411	
#	8	X9010-33350	ASSY-MOTOR WITH NUT 12 V-30W,MAGNETIC	1		411	N
	9	B7010-11405	BRUSH FOR COIL MOTOR	2	10	411	
#	10	X9010-33354	BRUSH FOR MAGNET MOTOR	2		411	N
	11	B7010-11406	BOLT-MOTOR	3	10	411	
	12	B7010-11407	RUBBER-CUSHION,MOTOR	6	10	411	
	13	B7010-11408	WASHER-MOTOR	6	1	411	
	14	B7010-13601	ASSY-FAN	1	1	411	
	15	25340-13200	ASSY-SWITCH,MOTOR	1	1	411	
	16	27186-14300	BRACKET-SWITCH	1	1	411	
	17	00314-03010	BOLT-BRACKET,SW	2	50	411	
	18	00915-11010	WASHER-SPRING,BRACKET	2	100	411	
	19	27012-13600	ASSY-BOX,HEATER	1	1	411	
	20	B7010-11400	CLIP-HEATER BOX	3	1	411	

Printed in Japan

REVISED: SEPTEMBER,1968

S	KEY NO.	PART NO.	PART NAME	Q'TY	SALES UNIT	MODEL	ICA
	21	00915-41410	WASHER-PLAIN,BOX TO DA SH	4		411	
	22	00915-11410	WASHER-SPRING,BOX TO D ASH	4		411	
	23	00911-14410	NUT,BOX TO DASH	4		411	
o	24	27060-11400	HOSE-AIR	1	1	411	
	25	00915-40810	WASHER-PLAIN,AIR HOSE	2		411	
	26	B7010-13600	KNOB-HOT/COLD	1	1	411	
	27	B7010-11402	SCREW-KNOB	1	1	411	
	28	B7010-11403	WASHER-KNOB	1	1	411	
	29	27061-14800	HOSE-INLET	1		1.3L 411	
	30	27086-00100	CLAMP-HOSE,INLET	2		1.3L 411	
	31	27070-11400	CONNECTOR TO ENGINE	1	5	1.3L 411	
	32	27067-11400	HOSE-OUTLET (1) (TO MA R-66)	1	5	1.3L R DRIVE 411	
	33	27067-10800	HOSE-OUTLET (1) (TO MA R-66)	1	1	1.3L L DRIVE 411	
	34	27066-32300	CONNECTOR (1) TO (11) (TO MAR-66)	1	10	1.3L 411	
	35	27066-16800	HOSE-OUTLET (11) 1110L (TO MAR-66)	1	1	1.3L R DRIVE 411	
	36	27066-17000	HOSE-OUTLET (11) 1030L (TO MAR-66)	1	5	1.3L L DRIVE 411	
o	37	27066-18400	HOSE-OUTLET (FROM APR. -66)	1	5	1.3L 411	N
	38	27045-18400	BRACKET-HOSE,UPPER (FR OM APR.-66)	2	5	1.3L 411	
	39	27042-73000	BRACKET-HOSE,LOWER (FR OM APR.-66)	2	5	1.3L 411	
	40	00114-41210	BOLT TO BRACKET (FROM APR-66.)	2		1.3L 411	

Printed in Japan

REVISED: SEPTEMBER,1968

S	KEY NO.	PART NO.	PART NAME	Q'TY	SALES UNIT	MODEL	ICA
	41	00915-11410	WASHER-SPRING TO BRACKET (FROM APR-66.)	2		1.3L 411	
	42	27086-00100	CLAMP-HOSE,OUTLET HOSE	4		1.3L 411	
	43	27086-00100	CLAMP-HOSE,OUTLET HOSE (FROM APR.-66)	2		1.3L 411	
*	44	27061-18800	HOSE-INLET (1)	1	5	1.6L 411	
	45	27061-18801	HOSE-INLET (1)	1	1	1.6L 411	
*	46	27063-18800	HOSE-OUTLET (1)	1	5	1.6L 411	
	47	27063-18801	HOSE-OUTLET (1)	1	5	1.6L 411	Y
	48	27086-00100	CLAMP-HOSE TO DASH	2		1.6L 411	
	49	27068-72600	CONNECTOR (1) TO (11)	2	10	1.6L 411	
*	50	27062-18800	HOSE-INLET (11)	1	5	1.6L 411	
	51	27062-18801	HOSE-INLET (11)	1	1	1.6L 411	Y
*	52	27064-18800	HOSE-OUTLET (11)	1	5	1.6L 411	
	53	27064-18801	HOSE-OUTLET (11)	1	5	1.6L 411	Y
	54	00721-12200	CLAMP-HOSE	6	10	1.6L 411	
	55	27041-18800	BRACKET	2	1	1.6L 411	
	56	27042-18800	BRACKET	1	5	1.6L 411	
	57	27076-33300	CONNECTOR TO RADIATOR HOSE	1		411	
	58	27061-11400	HOSE-DEFROSTER 38DX400L	2	1	411	

REVISED: SEPTEMBER,1968

Printed in Japan

NOTE

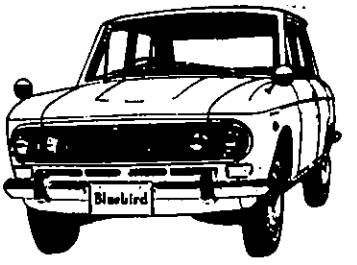

RADIO & CLOCK

Note: This figure will be given later.

S	KEY NO.	PART NO.	PART NAME	Q'TY	SALES UNIT	MODEL	ICA
			RADIO & CLOCK				
	1	27310-16600	SET-RADIO(INC.RADIO,SPEAKER,ANTENNA,AND ATTACHMENTS)	1		OP.411	
	2	27350-13601	ASSY-AERIAL,CAR RADIO	1		OP.411	
	3	27380-16600	SET-CLOCK (JECO)	1		OP.411	
#	4	X0000-W260A	KIT-MOTOR UNIT (JECO)	1		411	
#	5	X0000-H184B	KIT-MOVEMENT (JECO)	1		411	

Printed in Japan

REVISED: SEPTEMBER, 1968

NOTE

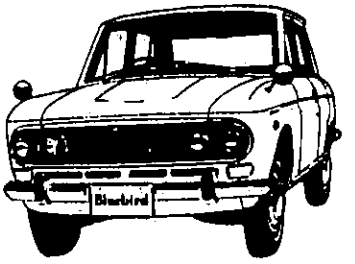

NOTE

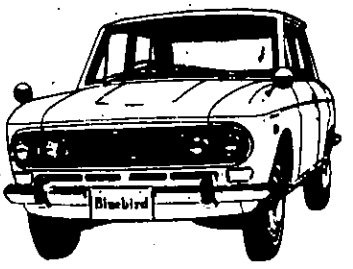

BATTERY

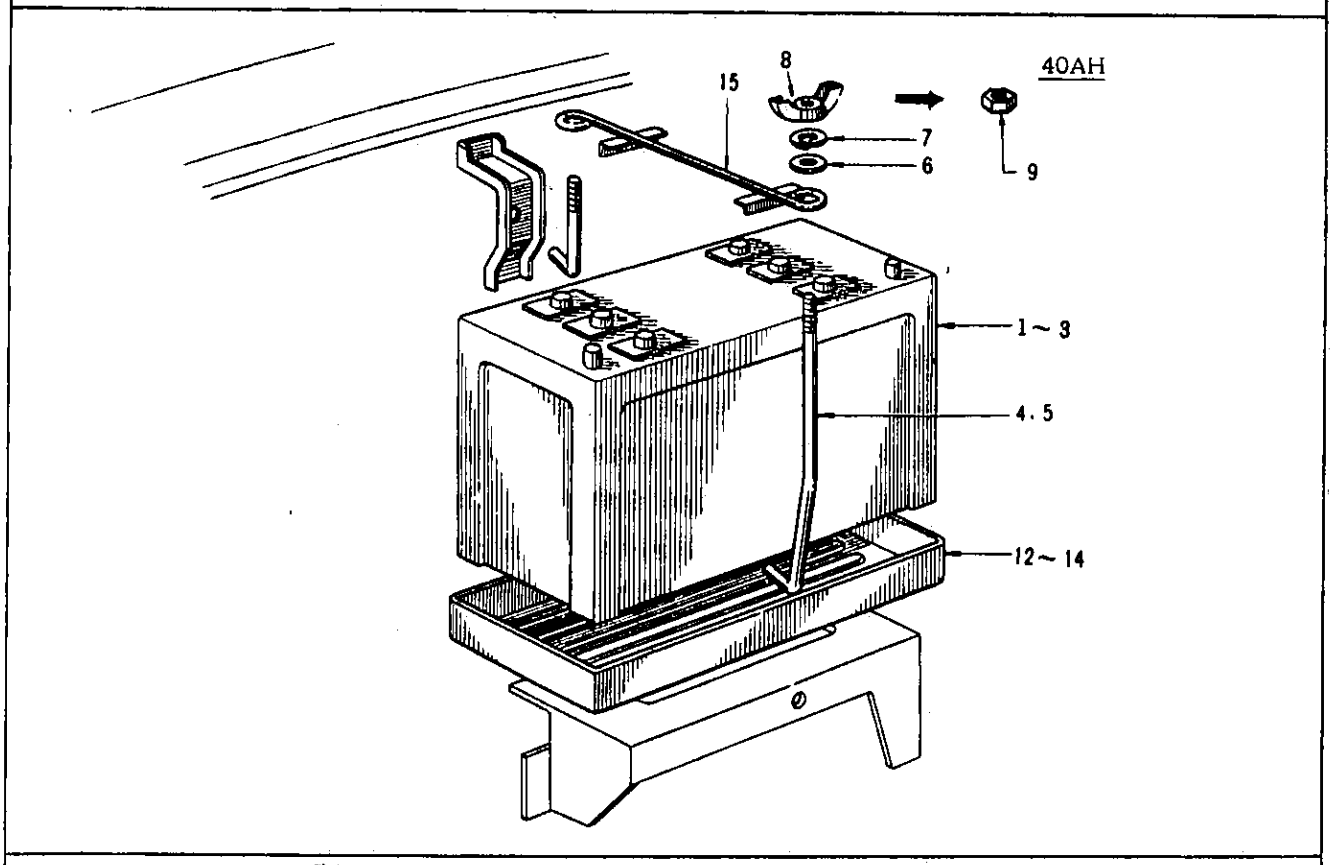
40AH
8
15
7
6
9
1 ~ 3
4, 5
12 ~ 14

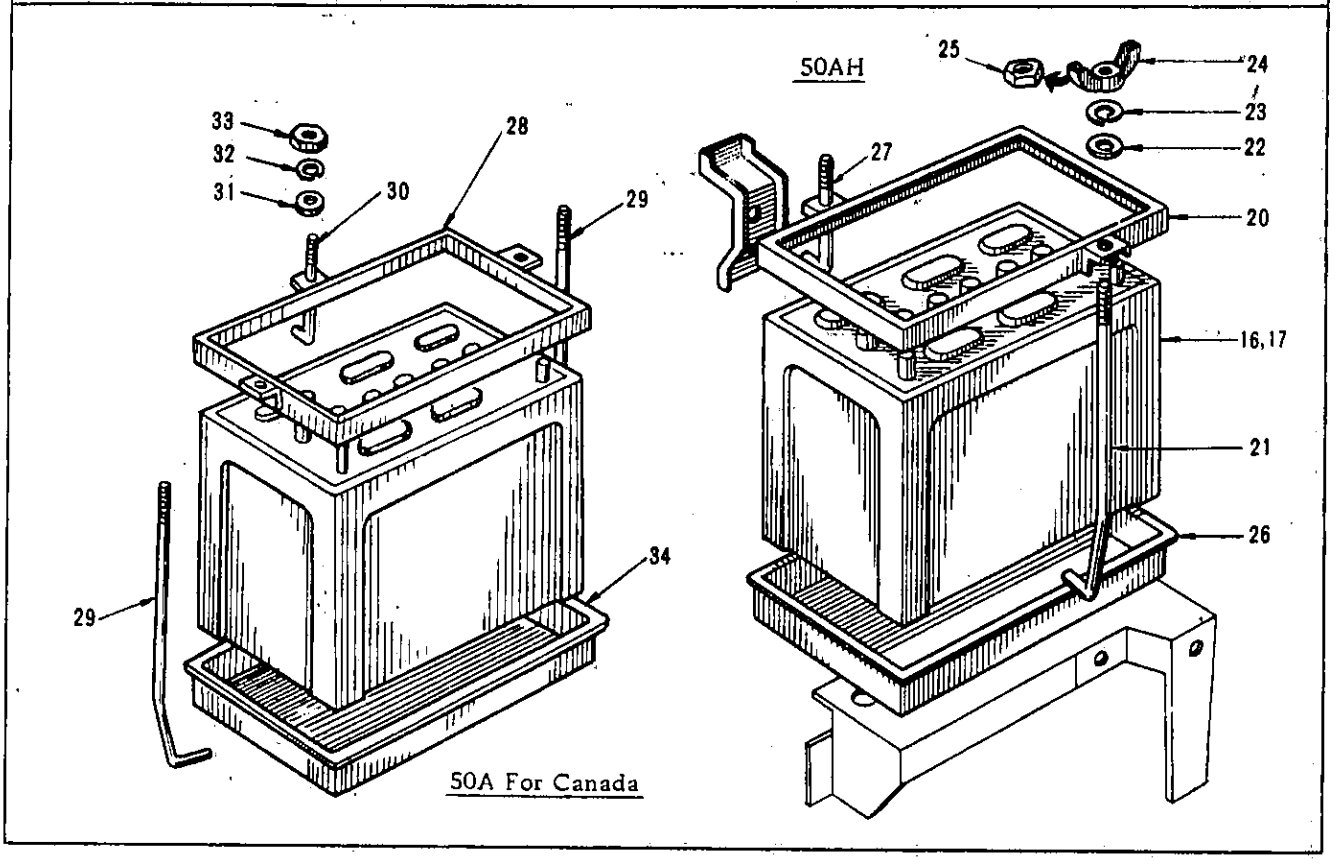
50AH
25
24
23
22
33
32
31
30
28
29
27
20
16, 17
21
26
34
29
50A For Canada

S	KEY NO.	PART NO.	PART NAME	Q'TY	SALES UNIT	MODEL	ICA
			BATTERY				
	1	24410-09401	BATTERY (12V-40AH;H.DRY)	1		411	
	2	24410-09403	BATTERY (12V-40AH;C.DRY)	1		411	
	3	24410-09405	BATTERY (12V-40AH;W.DRY)	1		411	
	4	24438-10601	ROD-LONG TO FIX BATTERY	1	5	1.3L 411	
	5	24438-15800	ROD-LONG TO FIX BATTERY	2		1.6L 411	
	6	00915-51410	WASHER-PLAIN TO FIX BATTERY	2		411	
	7	00915-11410	WASHER-LOCK TO FIX BATTERY	2		411	
	8	00913-44410	NUT-WING.TO FIX BATTERY	2		411	
	9	00911-14410	NUT-HEXAGON	2		411	Y
	10	24439-10600	ROD-BATTERY FIX "A",SHORT	1		1.3L 411	
	11	24439-10601	ROD-BATTERY FIX "A",SHORT	1	1	1.6L 411	
*	12	24428-16500	TRAY-BATTERY	1	1	1.3L 411	
	13	24428-24000	TRAY-BATTERY	1	1	1.3L 411	Y
	14	24428-18802	TRAY-BATTERY	1	1	1.6L 411	
*	15	24431-14800	BAR-BATTERY FIX 12V-40AH	1		411	
	16	24410-03021	BATTERY (12V-50AH;H.DRY)	1		OP 411(50A)	
	17	24410-03023	BATTERY (12V-50AH;C.DRY)	1		OP.411(50A)	

REVISED: SEPTEMBER,1968

Printed in Japan

S	KEY NO.	PART NO.	PART NAME	Q'TY	SALES UNIT	MODEL	ICA
	18	24410-03023	BATTERY (12V-50AH; C.DRY)	1		OP 411 (50A)	
	19	24410-03025	BATTERY (12V-50AH; W.DRY)	1		OP 411 (50A)	
	20	24420-10801	FRAME TO FIX "50A" BATTERY	1		OP 411 (50A)	
	21	24438-10601	ROD-LONG TO FIX "50A" BATTERY	1		OP 411 (50A)	
	22	9-15514-1	WASHER-PLAIN TO FIX "50A" BATTERY	2		OP 411 (50A)	
	23	9-15114-1	WASHER-LOCK TO FIX "50A" BATTERY	2		OP 411 (50A)	
	24	9-13444-1	NUT-WING TO FIX "50A" BATTERY	2		OP 411 (50A)	
	25	00911-14410	NUT-HEXAGON TO FIX "50A" BATTERY	2		OP 411 (50A)	
	26	24428-19101	TRAY-BATTERY (POLYETHYLENE)	1		OP 411 (50A)	
	27	24439-10601	ROD-SHORT	1		OP 411 (50A)	
	28	24420-18901	FRAME FIXING "50A" BATTERY FOR CANADA	1		1.6 L 411 FOR CANADA	
	29	24438-18901	ROD-LONG FIXING "50A" BATTERY FOR CANADA	2		1.6 L 411 FOR CANADA	
	30	24439-10601	ROD-SHORT FIXING "50A" BATTERY FOR CANADA	1		1.6 L 411 FOR CANADA	
	31	00915-51410	WASHER-PLAIN 1/4 FIXING "50A" BATTERY FOR CANADA	3		1.6 L 411 FOR CANADA	
	32	00915-11410	WASHER-SPRING 1/4 FIXING "50A" BATTERY FOR CANADA	3		1.6 L 411 FOR CANADA	
	33	00911-14410	NUT-HEXAGON 1/4 FIXING "50A" BATTERY FOR CANADA	3		1.6 L 411 FOR CANADA	
	34	24428-19102	TRAY FIXING "50A" BATTERY FOR CANADA	3		1.6 L 411 FOR CANADA	

Printed in Japan

REVISED: SEPTEMBER, 1968

S	KEY NO.	PART NO.	PART NAME	Q'TY	SALES UNIT	MODEL	ICA
	35	24415-01303	ELECTROLYTE FOR THE TROPICS (OVER 20 DEGREES C) SPECIFIC GRAVITY; 1.240 FOR 40A (3 LITTER)	1		411 (40A)	
	36	24415-01304	ELECTROLYTE FOR THE TROPICS (OVER 20 DEGREES C) SPECIFIC GRAVITY; 1.240 FOR 50A (4 LITTER)	1		411 (50A)	
	37	24416-01303	ELECTOLYTE FOR THE TEMPERATE ZONES (0 DEGREE C TO 20 DEGREES C) SPECIFIC GRAVITY; 1.260 FOR 40A (3 LITTER)	1		411 (40A)	
	38	24416-01304	ELECTROLYTE FOR THE TEMPERATE ZONES (0 DEGREE C TO 20 DEGREES C) SPECIFIC GRAVITY; 1.260 FOR 50A (4 LITTER)	1		411 (50A)	
	39	24417-01303	ELECTROLYTE FOR THE FRIGID ZONES (BELOW 0 DEGREE C) SPECIFIC GRAVITY; 1.280 FOR 40A (3 LITTER)	1		411 (40A)	
	40	24417-01304	ELECTROLYTE FOR THE FRIGID ZONES (BELOW 0 DEGREE C) SPECIFIC GRAVITY; 1.280 FOR 50A (4 LITTER)	1		411 (50A)	

REVISED: SEPTEMBER, 1968

Printed in Japan

NOTE

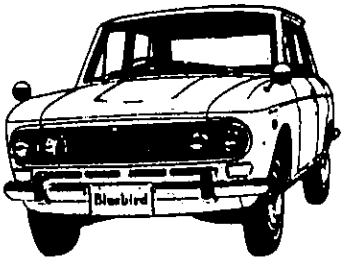

NOTE

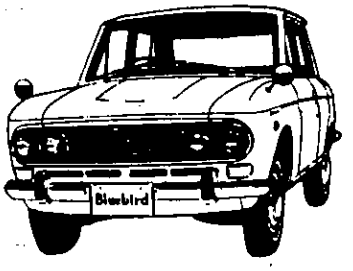

WINDSHIELD WIPER

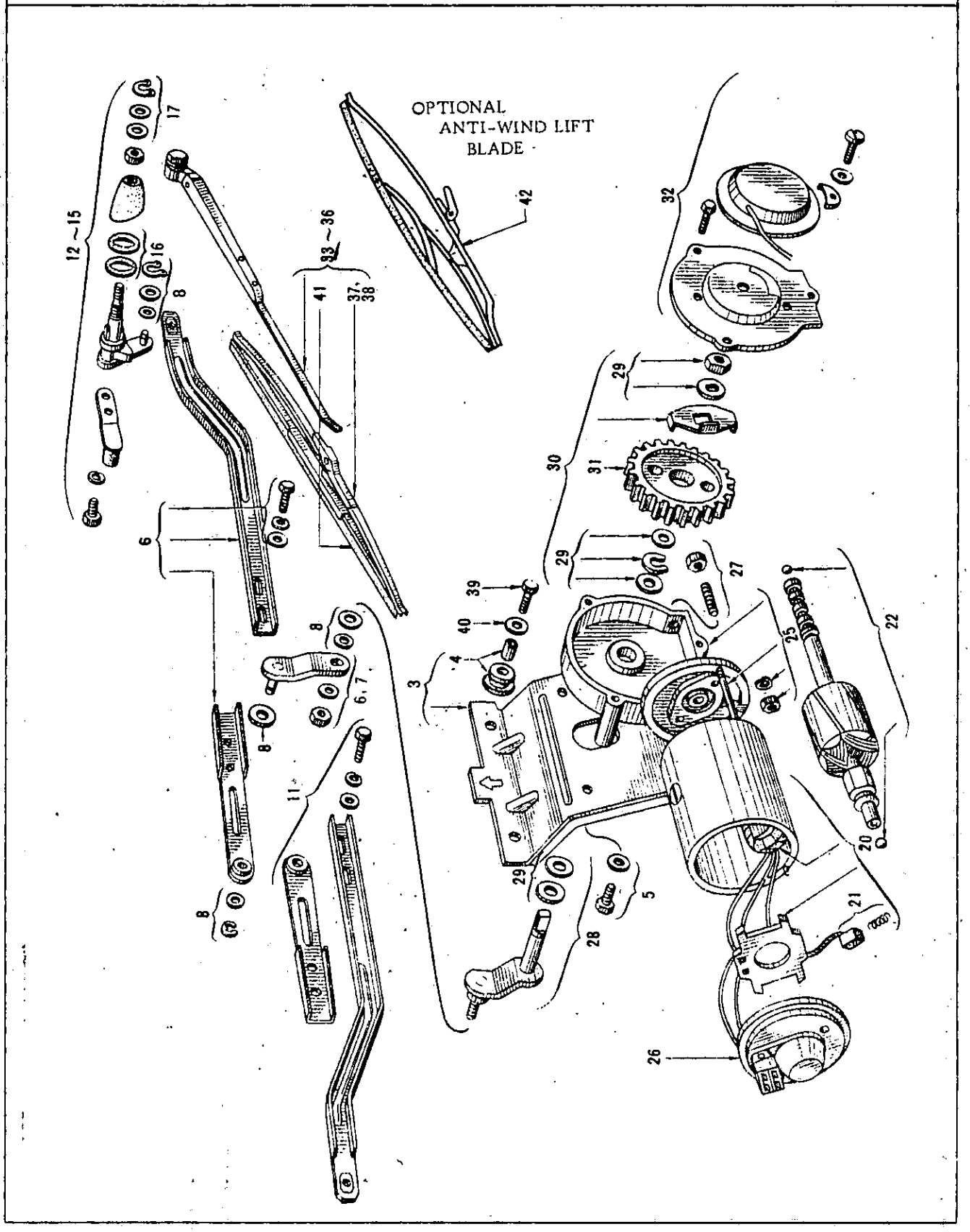

S	KEY NO.	PART NO.	PART NAME	Q'TY	SALES UNIT	MODEL	ICA
			WINDSHIELD WIPER				
	1	26340-16500	ASSY-DRIVE,WINDSHIELD WIPER (TO MAR-66)	1	1	411	
	2	26340-16501	ASSY-DRIVE,WINDSHIELD WIPER (FROM APR.-66) 2 SPEED	1	1	411	N
	3	26351-16500	ASSY-BRACKET,WIPER MOTOR	1		411	
	4	26353-10600	ASSY CUSHION,RUBBER	4	10	411	
	5	28726-10600	ASSY-FIX,MOTOR TO BRACKET	3	10	411	
	6	26344-10601	COMP.-ARM,READ,OUTER	1	1	411	
	7	26344-13200	COMP.-ARM,READ,OUTER	1	1	411	Y
	8	28727-10600	KIT-WASHER,CONNECTING ROD	1	1	411	
	9	26348-10601	ASSY-ROD,CONNECTING (L.H.)	1		411	
	10	26348-13200	ASSY-ROD,CONNECTING (L.H.)	1		411	Y
	11	26347-10601	ASSY-ROD,CONNECTING (R.H.)	1		411	
	12	26371-10601	ASSY-PIVOT,WINDSHIELD WIPER (R.H.)	1		411	
	13	26371-24000	ASSY-PIVOT,WINDSHIELD WIPER (R.H.) (ANTI-GLARE)	1	10	411	Y
	14	26372-10601	ASSY-PIVOT,WINDSHIELD WIPER (L.H.)	1		411	
	15	26372-24000	ASSY-PIVOT,WINDSHIELD WIPER (L.H.) (ANTI-GLARE)	1	10	411	Y
	16	26373-10601	PACKING-PIVOT	4		411	

Printed in Japan

REVISED: SEPTEMBER,1968

S	KEY NO.	PART NO.	PART NAME	Q'TY	SALES UNIT	MODEL	ICA
	17	28728-10600	KIT-O RING,PIVOT	2	1	411	
	18	26350-16500	ASSY-MOTOR,WINDSHIELD WIPER (TO MAR-66)	1	1	411	
	19	26350-16501	ASSY-MOTOR,WINDSHIELD WIPER (FROM APR.-66)	1	1	411	N
	20	28810-10601	ASSY-FIELD COIL,WITH B RUSH HOLDER	1		411	
	21	28817-10600	ASSY-BRUSH,CARBON	2		411	
	22	28815-10600	ASSY-ARMATURE	1		411	
	23	28831-10600	THRUST BALL,FRONT	1	1	411	
	24	28832-10600	THRUST BALL,REAR	1		411	
	25	28820-10600	ASSY-CASE,GEAR	1		411	
	26	28821-10600	ASSY-COVER,END	1		411	
	27	28822-10600	ASSY-SCREW,THRUST	1		411	
	28	28845-10600	ASSY-ARM,GEAR	1	1	411	
	29	28848-10600	KIT-WASHER,GEAR SHIFT	1	1	411	
	30	28846-10600	ASSY-WORM,WHEEL	1		411	
	31	28847-10600	WORM-WHEEL GEAR	1		411	
	32	28850-10600	ASSY-STOPPER,AUTO	1		411	
	33	26360-13200	ASSY-ARM,WITH WIPER BL ADE (R.H.) (TO SEP-66)	1		411	
	34	26380-24010	ASSY-ARM,W/OUT WIPER B LADE (R.H.) (FROM OCT. -66)	1	1	411	N
	35	26365-13200	ASSY-ARM,WITH WIPER BL ADE (L.H.) (TO SEP-66)	1		411	
	36	26385-24010	ASSY-ARM,W/OUT WIPER B LADE (L.H.) (FROM OCT. -66)	1	1	411	N
	37	26362-13200	ASSY-BLADE,WINDSHIELD WIPER (TO SEP-66)	2		411	

Printed in Japan

REVISED: SEPTEMBER,1968

S	KEY NO.	PART NO.	PART NAME	Q'TY	SALES UNIT	MODEL	ICA
	38	26360-89910	ASSY-BLADE,WINDSHIELD WIPER(NON-GLARE)(FROM OCT.-66)	2		411	N
	39	00314-42010	SCREW TO FIX WIPER UNIT	4	50	411	
	40	00915-51410	WASHER-PLAIN TO FIX WIPER UNIT	4		411	
	41	26364-13200	RUBBER-BLADE	1		411	
	42	26375-89910	ASSY-BLADE,WINDSHIELD (L.H.) WIPER (ANTI WIND-LIFT TYPE)	1		OP. 411	

REVISED: SEPTEMBER,1968

Printed in Japan

NOTE

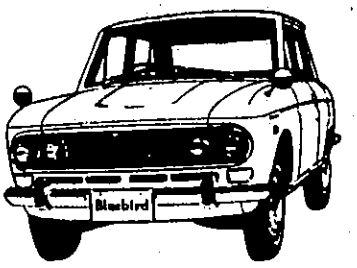

NOTE

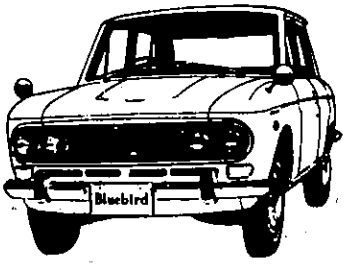

WINDSHIELD WASHER (TO MAR-66)

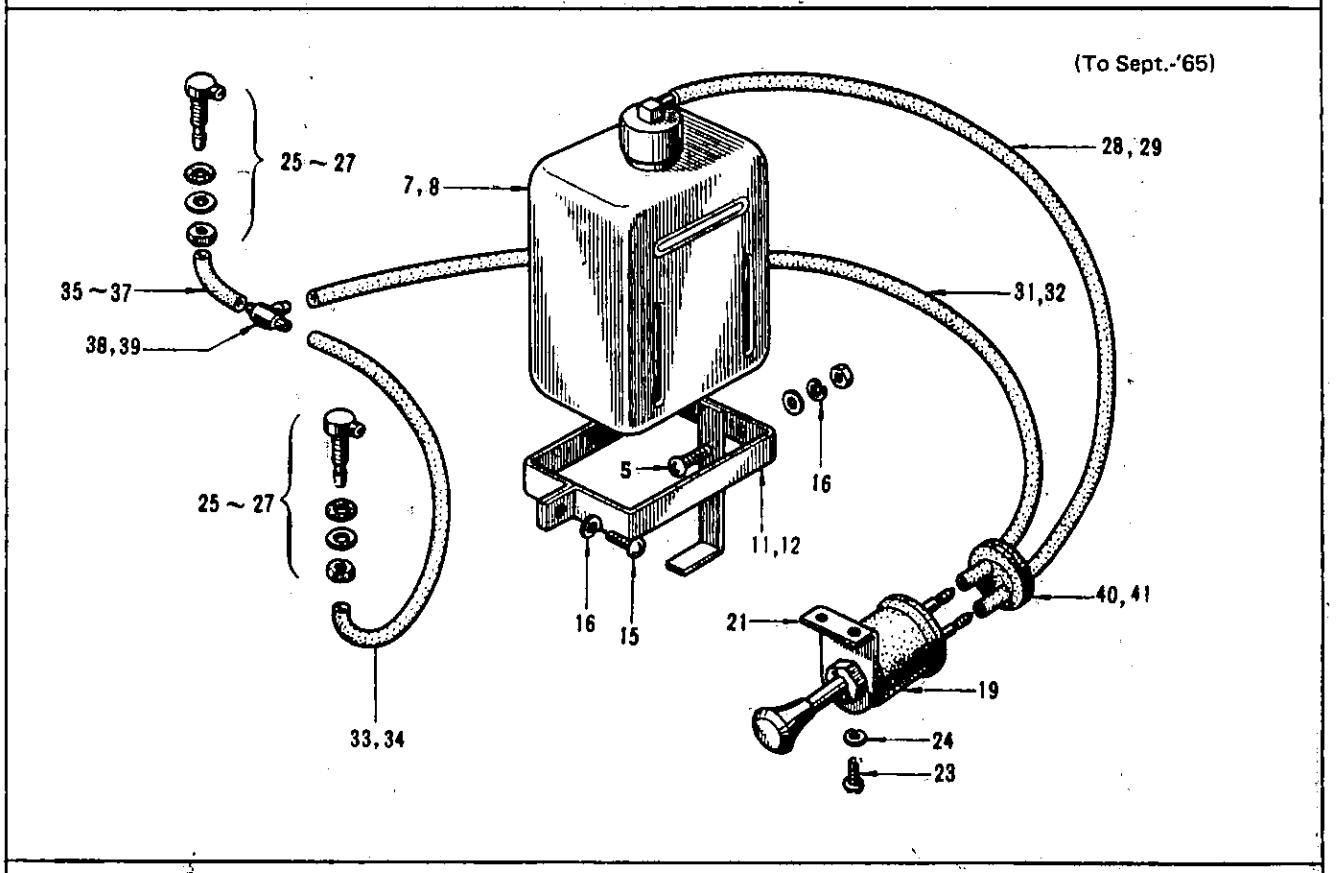

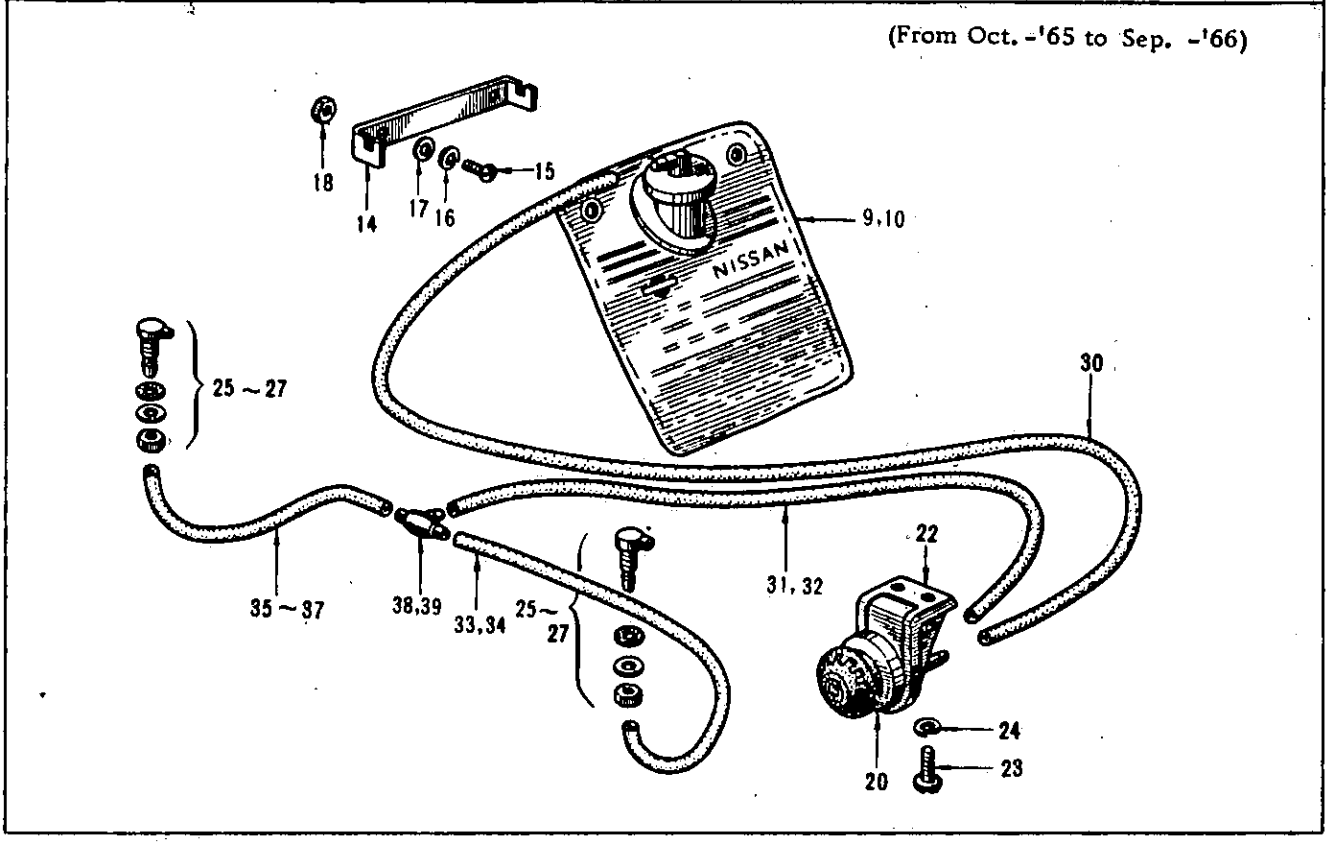

WINDSHIELD WASHER (TO MAR-66)

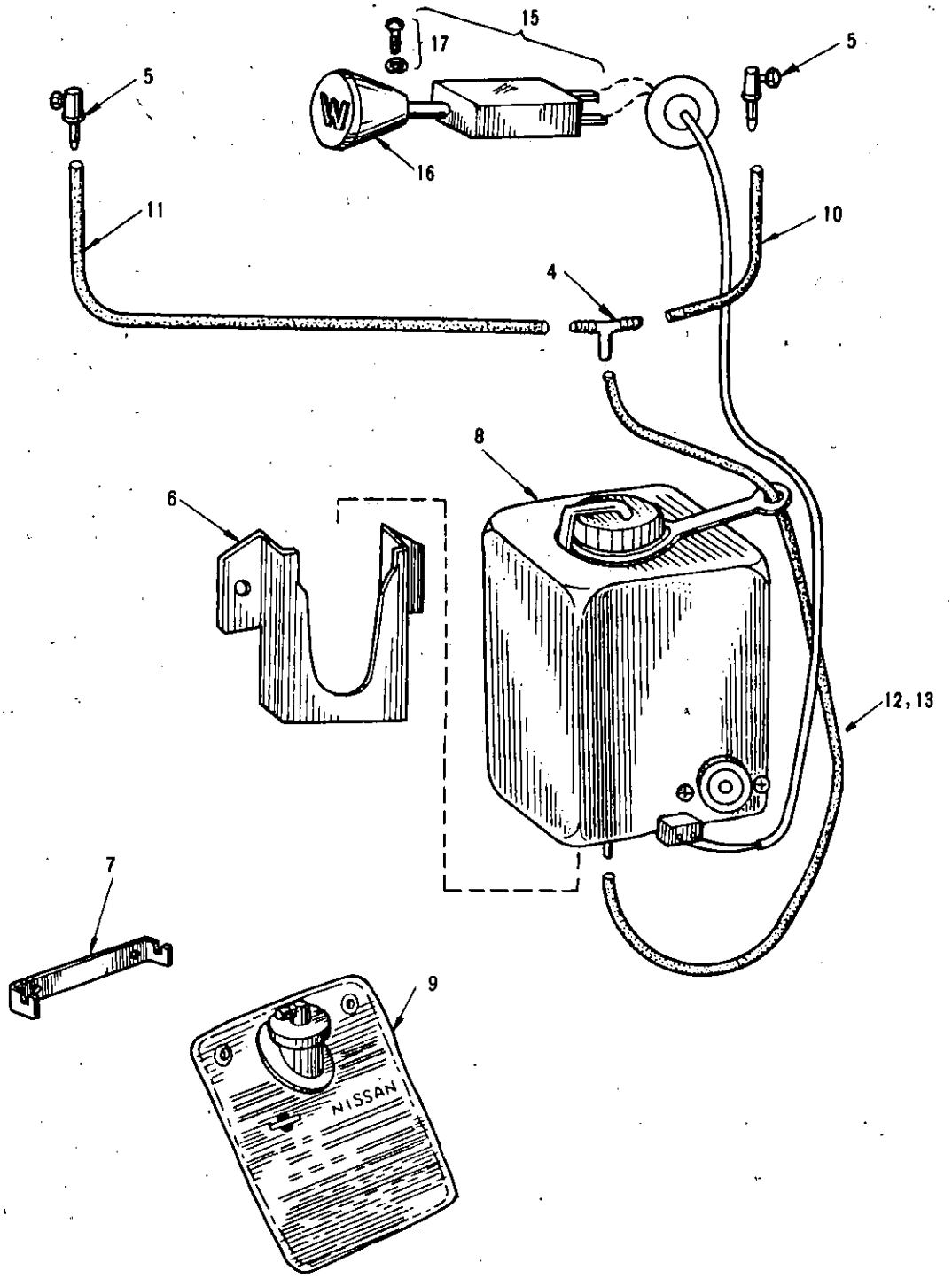

P411-UTK (SS)

S	KEY NO.	PART NO.	PART NAME	QTY	SALES UNIT	MODEL	ICA
			WINDSHIELD WASHER (TO MAR-66)				
	1	27400-13650	KIT-WASHER,WINDSHIELD (TO SEP-65)	1		R DRIVE 411(EXC.UTK)	
	2	27400-16510	KIT-WASHER,WINDSHIELD (FROM OCT.-65)	1	1	R DRIVE 411(EXC.UTK)	Y
	3	27400-15800	KIT-WASHER,WINDSHIELD (TO SEP-65)	1	1	UTK 411	
	4	27400-15810	KIT-WASHER,WINDSHIELD (FROM 65-OCT.)	1	1	UTK 411	Y
	5	27400-13950	KIT-WASHER,WINDSHIELD (TO SEP-65)	1		L DRIVE 411	
	6	27400-17010	KIT-WASHER,WINDSHIELD (FROM OCT.-65)	1	1	L DRIVE 411	Y
	7	27410-11401	ASSY-TANK,WINDSHIELD WASHER (TO SEP-65)	1	1	411(EXC.UTK)	
	8	27410-89900	ASSY-TANK,WINDSHIELD WASHER (FROM OCT.-65)	1	1	411(EXC.UTK)	N
	9	27415-15800	ASSY-BAG,WINDSHIELD WASHER (TO SEP-65)	1	2	UTK 411	
◦	10	27415-14800	ASSY-BAG,WINDSHIELD WASHER (FROM OCT-65)	1	1	UTK 411	N
	11	27445-11401	ASSY-BRACKET,TANK (TO SEP-65)	1	1	411(EXC.UTK)	
	12	27445-10801	ASSY-BRACKET,TANK (FROM OCT.-65)	1		411(EXC.UTK)	N
	13	27449-10800	SPACER-TANK BRACKET (TO MAR-66)	1	1	L DRIVE 411	
◦	14	27446-15800	BRACKET-WASHER BAG (TO MAR-66)	1	1	UTK 411	
	15	00114-41210	BOLT (TO MAR-66) TO FIX BRACKET	2		411	

REVISED: SEPTEMBER,1968

Printed in Japan

S	KEY NO.	PART NO.	PART NAME	QTY	SALES UNIT	MODEL	ICA
	16	00915-11410	WASHER-LOCK (TO MAR-66) TO FIX BRACKET	2		411	
	17	00915-41410	WASHER-PLAIN (TO MAR-6 6) TO FIX BRACKET	2		411	
	18	00911-14410	NUT (TO MAR-66) TO FIX BRACKET	2		411	
	19	27430-13600	ASSY-PUMP,WINDSHIELD W ASHER (BLACK) (TO MAR-66)	1		411	
	20	27430-89950	ASSY-PUMP,WINDSHIELD W ASHER (BLACK) WITH BRA CKET (TO MAR-66)	1		411	N
	21	27436-10600	BRACKET-PUMP,WINDSHIEL D WASHER (TO SEP-65)	1	2	411	
*	22	NOT - SALE	BRACKET-PUMP,WINDSHIEL D WASHER (FROM OCT-65)	1		411	N
	23	00314-03010	SCREW (TO MAR-66) TO F IX BRACKET	2	50	411	
	24	00915-11010	WASHER-LOCK (TO MAR-66) TO FIX BRACKET	2	100	411	
	25	27440-10600	ASSY-NOZZLE,WINDSHIELD WASHER (TO MAR-66)	2		411	
*	26	27442-11400	ASSY-VALVE,CHECK (TO S EP-65)	2	1	411	
*	27	27442-89900	ASSY-VALVE,CHECK (FROM OCT-65)	2	10	411	N
	28	27417-10601	TUBE-INLET (TANK TO PU MP) (TO SEP-65)	1		411 EXC, UTK,1.6L	
	29	27461-89931	TUBE-INLET,TANK TO PUM P (FROM OCT-65)	1	1	411 EXC, UTK,1.6L	N
	30	27461-89945	TUBE-INLET,TANK TO PUM P (TO MAR-66)	1	1	UTK,1.6L 411	
	31	27418-10601	TUBE-OUTLET (PUMP TO T EE) (TO SEP-65)	1		411	
	32	27461-89905	TUBE-OUTLET (PUMP TO T EE) (FROM OCT-65)	1	5	411	N

Printed in Japan

REVISED: SEPTEMBER,1968

S	KEY NO.	PART NO.	PART NAME	Q'TY	SALES UNIT	MODEL	ICA
	33	27419-10600	TUBE-OUTLET (TEE TO NOZZLE R.H.) (TO SEP-65)	1	5	411	
	34	27460-89981	TUBE-OUTLET (TEE TO CHECK VALVE R.H.) (FROM OCT-65)	1	1	411	N
	35	27414-10600	TUBE-OUTLET (TEE TO NOZZLE L.H.) (TO SEP-65)	1	5	411	
	36	27460-89913	TUBE-OUTLET (TEE TO CHECK VALVE L.H.) (FROM OCT-65)	1	1	411	N
	37	27460-89904	TUBE-CHECK VALVE TO NOZZLE (TO MAR-66)	1	10	411	
	38	27416-10600	TEE-TUBE,WINDSHIELD WASHER (TO SEP-65)	1	10	411	
	39	27416-89900	TEE-TUBE,WASHER (FROM OCT-65)	1	1	411	N
	40	27428-10601	GROMMET-RUBBER (TO SEP-65)	1	10	411	
	41	27428-14800	GROMMET-RUBBER (FROM OCT-65)	1	1	411	N

REVISED: SEPTEMBER,1968

Printed in Japan

NOTE

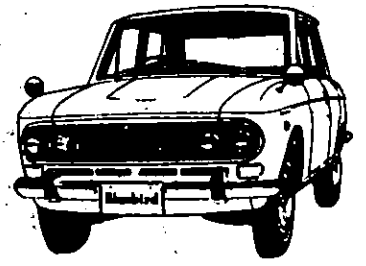

WINDSHIELD WASHER (FROM APR-66 TO SEP-66)

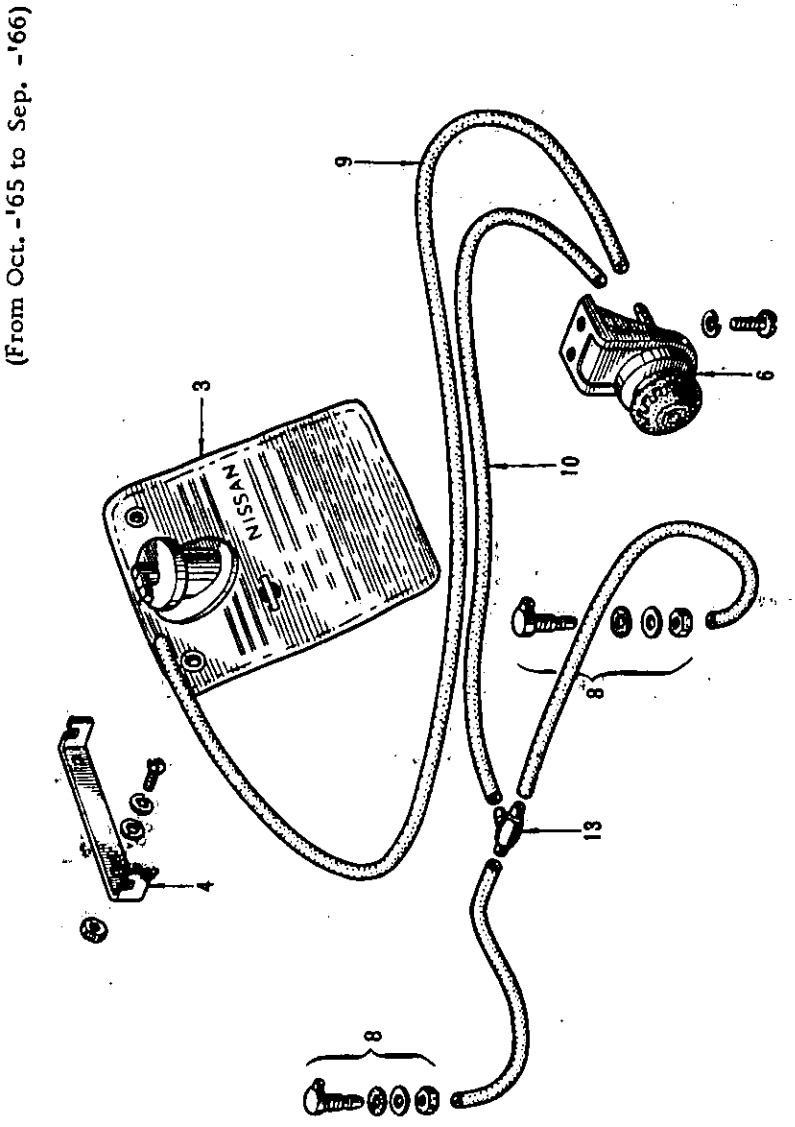

S	KEY NO.	PART NO.	PART NAME	Q'TY	SALES UNIT	MODEL	ICA
			WINDSHIELD WASHER (FROM APR-66 TO SEP-66)				
	1	27400-15811	KIT-WASHER,WINDSHIELD (FROM APR.-66 TO SEP-66)	1	1	R DRIVE 411	
	2	27400-18700	KIT-WASHER,WINDSHIELD (FROM APR.-66 TO SEP-66)	1	1	L DRIVE 411	
*	3	27415-14800	ASSY-BAG,WASHER (FROM APR-66 TO SEP-66)	1	1	411	
	4	27446-89900	HANGER-WASHER BAG (FROM APR-66 TO SEP-66)	1	1	411	
	5	27446-19000	BRACKET-WASHER BAG (FROM APR-66 TO SEP-66)	1		411	
	6	27430-89950	ASSY-PUMP,WASHER WITH BRACKET(FROM APR-66 TO SEP-66)	1		411	
*	7	27442-89900	ASSY-VALVE,CHECK (FROM APR-66 TO SEP-66)	2	10	411	
	8	27440-10600	ASSY-NOZZLE (FROM APR-66 TO SEP-66)	2		411	
	9	27461-89945	TUBE-BAG TO PUMP (FROM APR-66 TO SEP-66)	1	1	411	
	10	27461-89905	TUBE-PUMP TO TEE (FROM APR-66 TO SEP-66)	1	5	411	
	11	27460-89981	TUBE-TEE TO CHECK VALVE (FROM APR-66 TO SEP-66)	1	1	411	
	12	27460-89904	TUBE-CHECK VALVE NOZZLE (FROM APR-66 TO SEP-66)	2	10	411	
	13	27416-89900	TEE-TUBE (FROM APR-66 TO SEP-66)	1	1	411	
	14	27428-14800	GROMMET-RUBBER (FROM APR-66 TO SEP-66)	1	1	411	

Printed in Japan

REVISED: SEPTEMBER,1968

NOTE

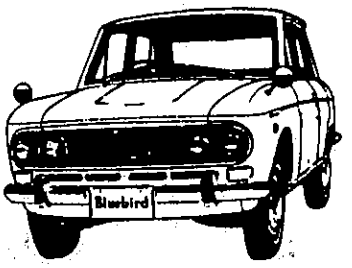

NOTE

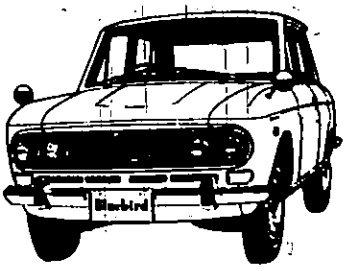

WINDSHIELD WASHER (FROM OCT-66)

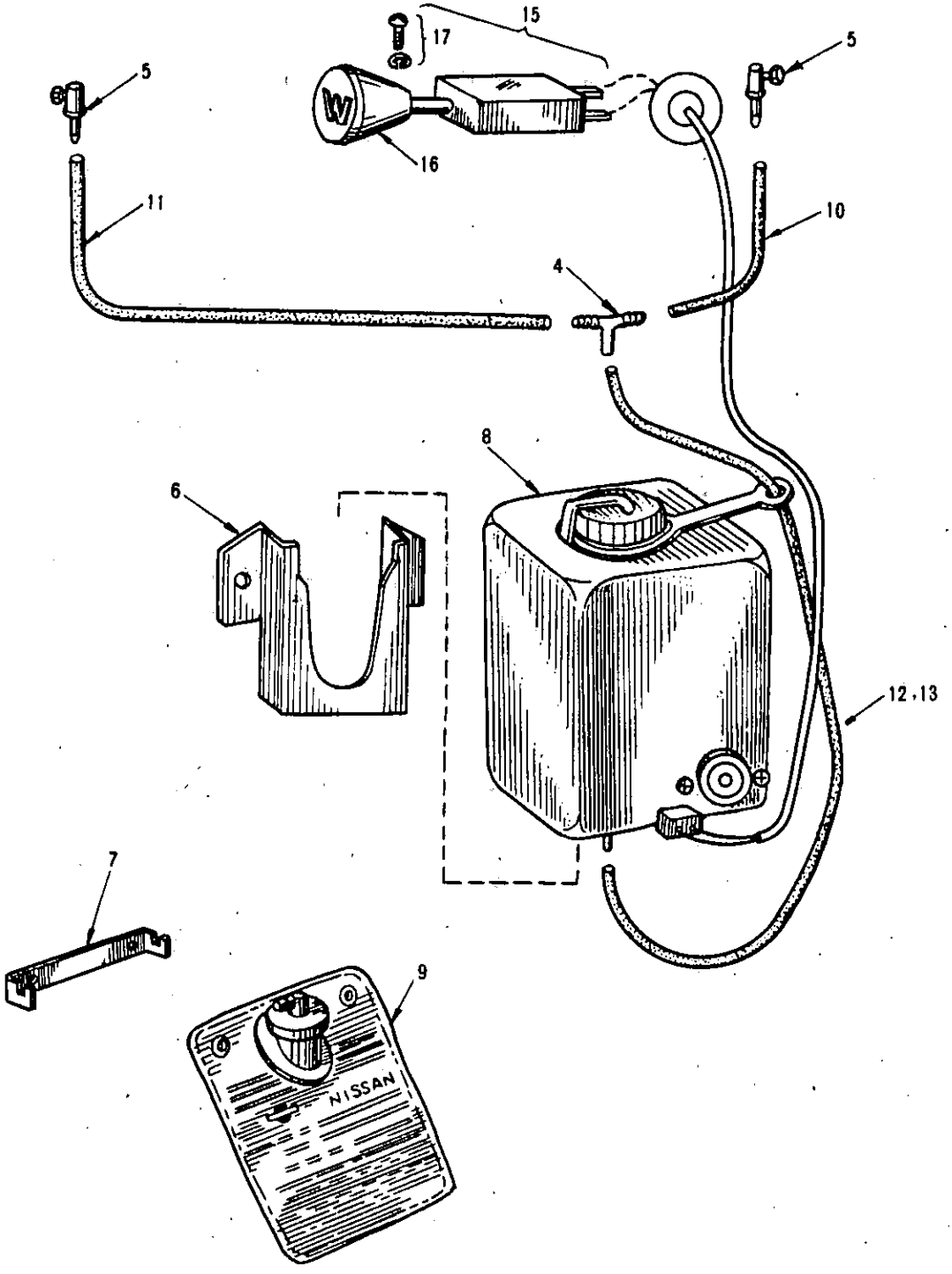

P411-UTK (SS)

WINDSHIELD WASHER (FROM OCT-66)

S	KEY NO.	PART NO.	PART NAME	Q'TY	SALES UNIT	MODEL	ICA
	1	27400-24100	KIT-W/S WASHER,ELECTRIC PUMP (FROM OCT-66)	1	1	R DRIVE (EXC.UTK) 411	
	2	27400-18701	KIT-W/S WASHER,ELECTRIC PUMP (FROM OCT-66)	1		L DRIVE 411	
	3	27400-24101	KIT-W/S WASHER (FROM OCT-66)	1	1	UTK 411	
	4	27416-89900	TEE-TUBE (FROM OCT-66)	1	1	411	
	5	27440-10600	ASSY-NOZZLE W/S WASHER (FROM OCT-66)	2		411	
	6	27446-24100	BRACKET-TANK (FROM OCT-66)	1	1	411 EXC. UTK	
	7	27446-89900	HANGER-W/S WASHER BAG (FROM OCT-66)	1	1	UTK 411	
*	8	27470-89900	ASSY-TANK,WASHER (FROM OCT-66)	1	1	411 EXC. UTK	
	9	27480-89900	ASSY-BAG,WASHER (FROM OCT-66)	1		UTK 411	
	10	27460-89980	TUBE,TEE TO NOZZLE R.H. (800 MM) (FROM OCT-66)	1	1	411	
	11	27460-89920	TUBE,TEE TO NOZZLE L.H. (200 MM) (FROM OCT-66)	1	5	411	
	12	27460-89940	TUBE,TEE TO PUMP (TANK/BAG) (400 MM) (FROM OCT-66)	1	10	R DRIVE 411	
	13	27460-89946	TUBE,TANK TO TEE (460 MM) (FROM OCT-66)	1	5	L DRIVE 411	
	14	27428-14800	GROMMET-RUBBER (FROM OCT-66)	1	1	411	

Printed in Japan

REVISED: SEPTEMBER,1968

S	KEY NO.	PART NO.	PART NAME	Q'TY	SALES UNIT	MODEL	ICA
	15	25260-13200	COMP.-SWITCH,WIPER & WINDSHIELD WASHER (FROM OCT-66)	1		411	
	16	25265-24100	KNOB-WIPER & WINDSHIELD WASHER (FROM OCT-66)	1		411	
	17	25169-89900	SET-SCREW & WASHER (FROM OCT-66)	1	10	411	

REVISED: SEPTEMBER.1968

Printed in Japan

NOTE

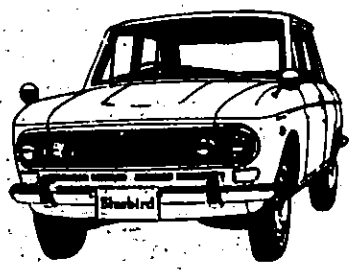

INSTRUMENT METER

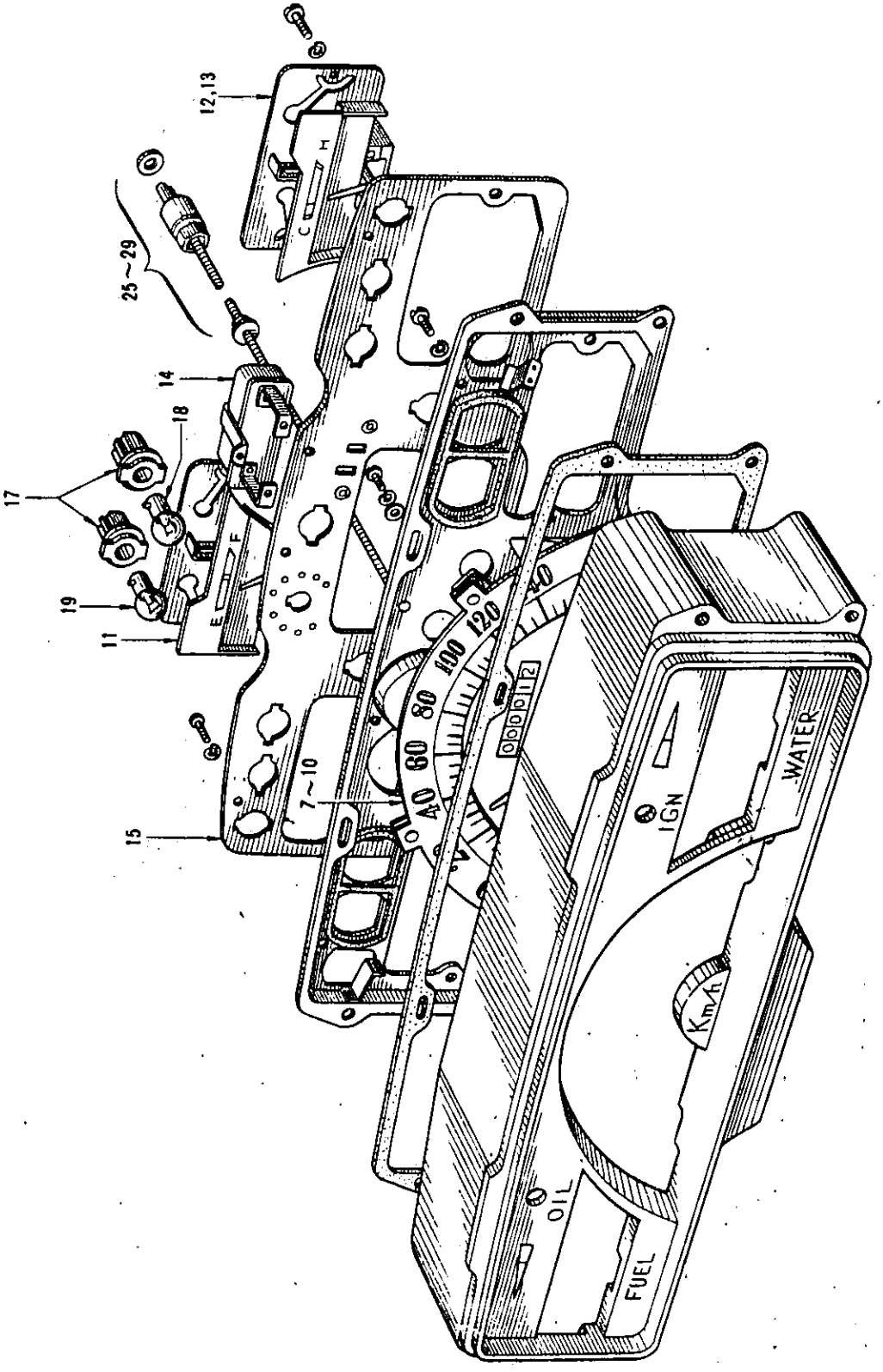

S	KEY NO.	PART NO.	PART NAME	Q'TY	SALES UNIT	MODEL	ICA
			INSTRUMENT METER				
	1	24820-13800	METER-INSTRUMENT COMBINED (160 KM/H) (TO MAR-66)	1		411 (KM AREA)	
	2	24820-16500	METER-INSTRUMENT COMBINED (160 KM/H) (FROM APR.-66 TO SEP-66)	1	1	411 (KM AREA)	N
	3	24820-24000	METER-INSTRUMENT COMBINED (160 KM/H) (FROM OCT.-66)	1	1	411 (KM AREA)	N
	4	24820-13300	METER-INSTRUMENT COMBINED (100 MILE) (FROM OCT.-66)	1		411 (MILE ARE)	
	5	24820-17000	METER-INSTRUMENT COMBINED (100 MILE)	1	1	411 (MILE AREA)	N
	6	24820-19101	METER-INSTRUMENT COMBINED (100 MILE) (FROM OCT.-66)	1	1	411 (MILE AREA)	N
	7	24850-13800	ASSY-SPEEDOMETER (160 KM/H) (TO MAR-66)	1	1	411 (KM AREA)	
	8	24850-16500	ASSY-SPEEDOMETER (160 KM/H) (FROM APR.-66)	1	1	411 (KM AREA)	N
	9	24850-13300	ASSY-SPEEDOMETER (100 MILE) (TO MAR-66)	1		411 (MILE AREA)	
	10	24850-17000	ASSY-SPEEDOMETER (100 MILE) (FROM APR.-66)	1	1	411 (MILE AREA)	N
	11	24860-13200	ASSY-GAUGE,FUEL	1		411	
	12	24880-13200	ASSY-GAUGE,WATER TEMPERATURE (TO 120 DEGREES (C)) (TO MAR-66)	1		411	
	13	24880-16500	ASSY-GAUGE,WATER TEMPERATURE (TO 130 DEGREES (C)) (TO MAR-66)	1	1	411	N
	14	25020-13200	ASSY-REGULATOR	1	1	411	

Printed in Japan

REVISED: SEPTEMBER,1968

S	KEY NO.	PART NO.	PART NAME	QTY	SALES UNIT	MODEL	ICA
	15	25030-13200	PLATE-PRINTED CIRCUIT (TO MAR-66)	1	1	411	
	16	25030-16500	CASE-REAR WITH PRINTED CIRCUIT (FROM APR.-66)	1	1	411	N
	17	26260-13200	ASSY-SOCKET,BULB	9	10	411	
	18	26261-30100	BULB 12V-1.5W	5		411	
	19	26261-10600	BULB 12V-3.0W	4		411	
	20	68401-13201	ASSY-COVER,METER (ZN DIE CAST) (TO MAR-66)	1		411	
	21	25010-16500	ASSY-COVER,METER (PLASTIC) (FROM APR.-66)	1	1	411	N
*	22	25240-89900	COMP.-SWITCH,OIL PRESSURE ENGINE UNIT	1		411	
	23	25080-13200	GAUGE-WATER TEMPERATURE ENGINE UNIT (TO 120C) (TO MAR-66)	1		411	
	24	25080-62200	GAUGE-WATER TEMPERATURE ENGINE UNIT (TO 130C) (FROM APR.-66)	1	1	411	N
	25	25050-24000	ASSY-SHAFT,SPEEDOMETER FLEXIBLE,1,500M/M	1	1	U.WU 411	
	26	25050-89917	ASSY-SHAFT,SPEEDOMETER FLEXIBLE,1,700M/M	1	5	UT.WUT.UTK 411	
*	27	25050-89916	ASSY-SHAFT,SPEEDOMETER FLEXIBLE,1,600M/M	1	1	LU.WLU 411	
*	28	25050-89914	ASSY-SHAFT,SPEEDOMETER FLEXIBLE,1,400M/M	1	1	LUT.WLUT. RL-UTK.WRL -UTK 411	
	29	25050-89920	ASSY-SHAFT,SPEEDOMETER FLEXIBLE,2,000M/M	1	1	RL-UAK,WRL -UAK 411	
	30	24051-10600	GROMMET	1		411	
	31	25021-02700	PACKING-FLEXIBLE SHAFT	1	10	411	

Printed in Japan

REVISED: SEPTEMBER,1968

S	KEY NO.	PART NO.	PART NAME	Q'TY	SALES UNIT	MODEL	ICA
	32	24800-16700	KIT-COMBINED,INSTRUMENT WITH ELECTRICAL TACHOMETER	1	1	OP.UTK 411	
	33	24820-16700	METER-COMBINED INSTRUMENT	1	1	OP.UTK 411	
	34	24850-15800	ASSY-SPEEDOMETER	1	1	OP.UTK 411	
	35	24855-16700	ASSY-TACHOMETER	1	1	OP.UTK 411	
	36	24860-15800	GAUGE-FUEL	1	1	OP.UTK 411	
	37	24870-15800	GAUGE-OIL PRESSURE	1	1	OP.UTK 411	
	38	24880-16700	GAUGE-WATER TEMPERATURE	1		OP.UTK 411	
	39	25010-15801	ASSY-COVER,METER	1	1	OP.UTK 411	
	40	25070-15800	GAUGE-OIL PRESSURE,ENGINE UNIT	1	1	OP.UTK 411	
	41	25080-62200	GAUGE-WATER TEMPERATURE ENGINE UNIT	1	1	OP.UTK 411	
	42	00314-05010	SCREW	4	50	OP.UTK 411	
	43	00915-11010	WASHER-LOCK	4	100	OP.UTK 411	

Printed in Japan

REVISED: SEPTEMBER,1968

NOTE

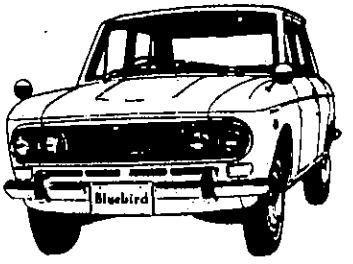

23.60
12.60
11.00

NOTE

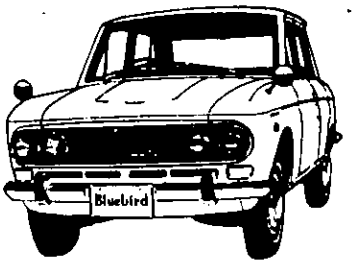

HEAD LAMP

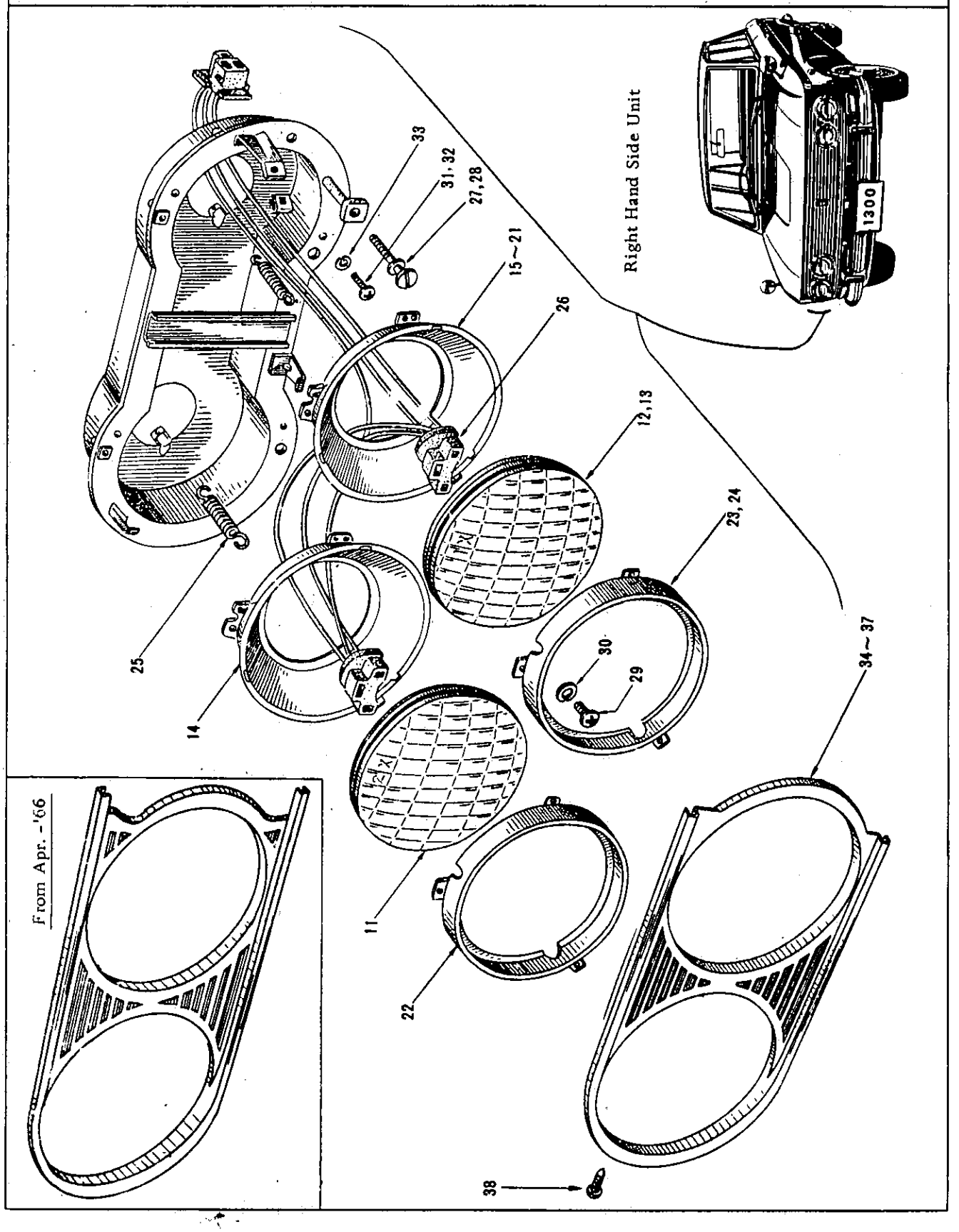
Right Hand Side Unit
1300
33
31, 32
27, 28
15~21
26
12, 13
23, 24
25
14
30
29
34~37
11
22
38
From Apr. -'66

S	KEY NO.	PART NO.	PART NAME	Q'TY	SALES UNIT	MODEL	ICA
			HEAD LAMP				
	1	26010-14001	ASSY-LAMP,HEAD(R.H.) (ICHIKAWA)	1		R DRIVE 41 1	
	2	26010-14003	ASSY-LAMP,HEAD (R.H.) (KOITO)	1		R DRIVE 41 1	
	3	26010-13901	ASSY-LAMP,HEAD (R.H.) (ICHIKAWA)	1		L DRIVE 41 1	
	4	26010-13903	ASSY-LAMP,HEAD (R.H.) (KOITO)	1		L DRIVE 41 1	
	5	26060-14001	ASSY-LAMP,HEAD (L.H.) (ICHIKAWA)	1		R DRIVE 41 1	
	6	26010-13903	ASSY-LAMP,HEAD (L.H.) (KOITO)	1		R DRIVE 41 1	
	7	26060-13901	ASSY-LAMP,HEAD (L.H.) (ICHIKAWA)	1		L DRIVE 41 1	
	8	26060-13903	ASSY-LAMP,HEAD (L.H.) (KOITO)	1		L DRIVE 41 1	
*	9	26006-14001	ASSY-HEAD LAMP,WITHOUT SEALED BEAMS R.H.	1		411 DENMAR K	
*	10	26056-14001	ASSY-HEAD LAMP,WITHOUT SEALED BEAMS L.H.	1		411 DENMAR K	
	11	26011-58001	UNIT-HEAD LAMP (ICHIKA WA) TYPE 1	2		411	
	12	26012-58001	UNIT-HEAD LAMP (ICHIKA WA) TYPE 2	2		R DRIVE 41 1	
	13	26012-58501	UNIT-HEAD LAMP (ICHIKA WA) TYPE 2	2		L DRIVE 41 1	
	14	26016-36700	BODY-SUB (NO.1) R.H. (ICHIKAWA)	1		411	
	15	26017-36700	BODY-SUB (NO.2) R.H. (ICHIKAWA)	1	1	411	

REVISED: SEPTEMBER,1968

Printed in Japan

S	KEY NO.	PART NO.	PART NAME	QTY	SALES UNIT	MODEL	ICA
	16	26016-71201	BODY-SUB (NO.1) R.H. (KOITO)	1		411	
	17	26017-71201	BODY-SUB (NO.3) R.H. (KOITO)	1		411	
	18	26018-36700	BODY-SUB (NO.3) L.H. (ICHIKAWA)	1	1	411	
	19	26019-36700	BODY-SUB (NO.4) L.H. (ICHIKAWA)	1		411	
	20	26018-71201	BODY-SUB (NO.2) L.H. (KOITO)	1	1	411	
	21	26019-71201	BODY-SUB (NO.4)L.H. (K OITO)	1	1	411	
	22	26023-14000	RING-RETAINING,LAMP UN IT	2		411	
	23	26024-14000	RING-RETAINING,LAMP UN IT (ICHIKAWA)	2		411	
	24	26024-71201	RING-RETAINING,LAMP UN IT (KOITO)	2		411	
	25	26024-58000	SPRING-TENSION	4		411	
	26	26031-10600	ASSY-CABLE,HEAD LAMP,W ITH CONNECTOR	2		411	
	27	26022-58000	SCREW-ADJUSTING (ICHIK AWA)	8	10	411	
	28	26022-01301	SCREW-ADJUSTING (KOITO)	8		411	
	29	00998-11110	SCREW	12		411	
	30	00999-90110	WASHER-LOCK	12		411	
	31	26022-04100	SCREW (ICHIKAWA) FIXIN G LAMP BODY	8		411	
	32	00414-01010	SCREW (KOITO) FIXING L AMP BODY	8	50	411	
	33	00915-11010	WASHER-LOCK	8	100	411	
	34	62410-13200	RIM-HEAD LAMP	2		411	

Printed in Japan

REVISED: SEPTEMBER,1968

S	KEY NO.	PART NO.	PART NAME	Q'TY	SALES UNIT	MODEL	ICA
	35	62410-18400	RIM-HEAD LAMP (FROM APR.-66)	2		411(EXC. UTK, 1.6l)	N
	36	62410-13200	RIM-HEAD LAMP	2		411 (EXC. UTK, 1.6L)	
	37	62410-19400	RIM-HEAD LAMP (FROM APR.-66)	2		UTK, 1.6L 411	N
	38	63831-10600	SCREW (TO FIX HEAD LAMP RIM)	6	50	411	
	39	26260-13200	ASSY-SOCKET,BULB	9	10	411	

REVISED: SEPTEMBER,1968

Printed in Japan

NOTE

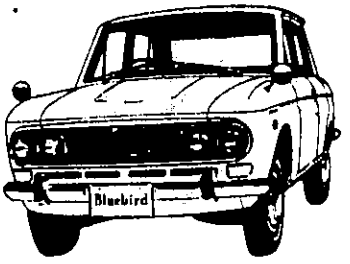

NOTE

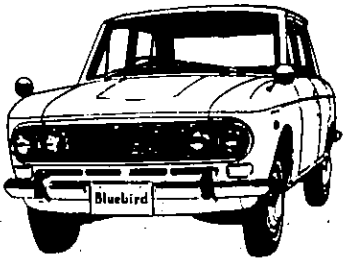

PARK & TURN SIGNAL LAMP

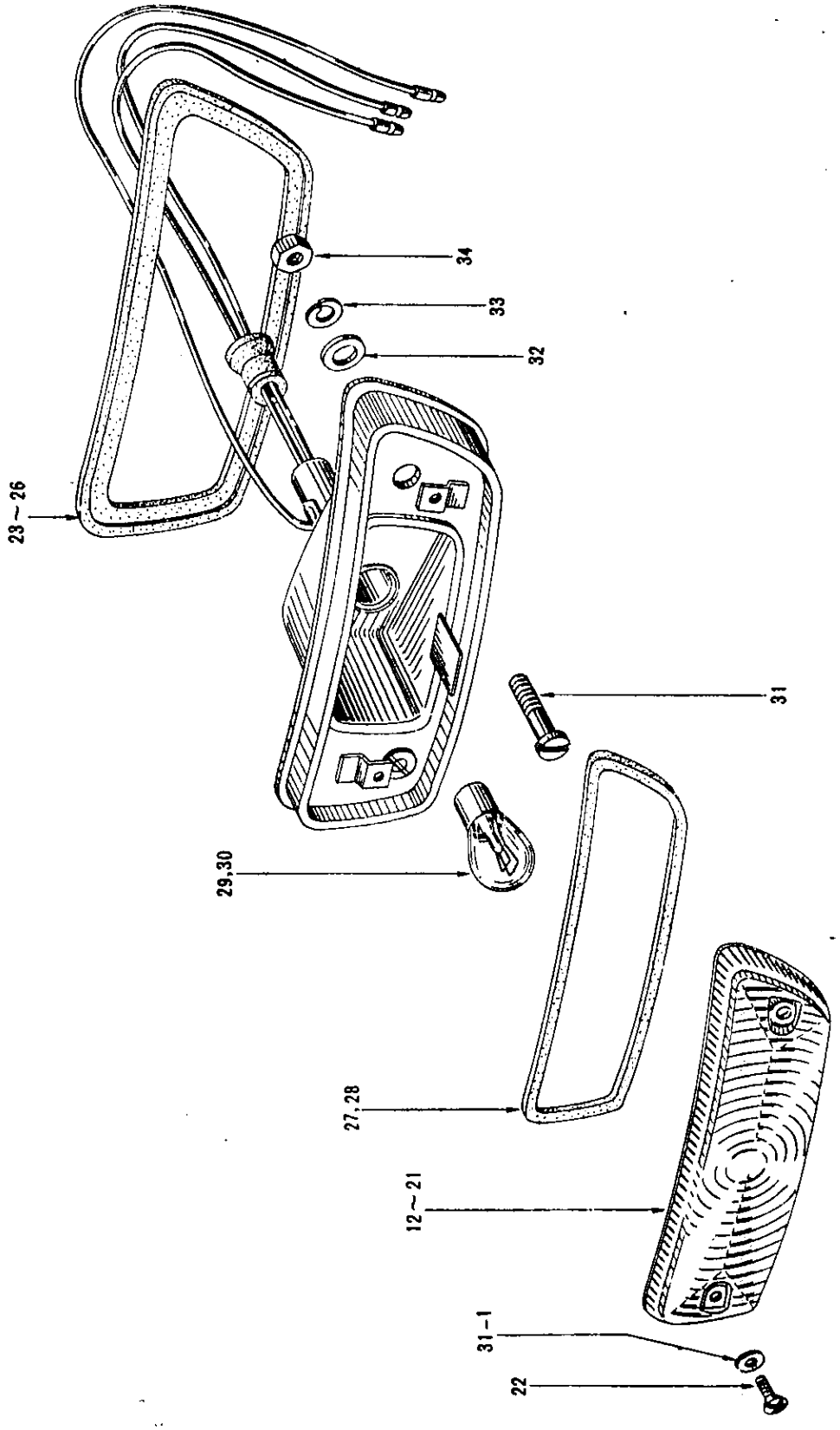

S	KEY NO.	PART NO.	PART NAME	Q'TY	SALES UNIT	MODEL	ICA
			PARK & TURN SIGNAL LAMP				
	1	26120-10600	ASSY-LAMP,PARKING & TURN SIGNAL (R.H.) (ICHIKAWA)	1	5	R DRIVE 411	
	2	26120-10602	ASSY-LAMP,PARKING & TURN SIGNAL (R.H.) (KOITO)	1		R DRIVE 411	
	3	26120-10800	ASSY-LAMP,PARKING & TURN SIGNAL,AMBER (R.H.)	1		411 U.S.A.	
	4	26120-18700	ASSY-LAMP,PARKING WHITE (R.H.)	1		411 DENMARK	
	5	26130-18700	ASSY-LAMP,TURN SIGNAL, AMBER (R.H.)	1		411 DENMARK	
	6	26125-10600	ASSY-LAMP,PARKING & TURN SIGNAL (L.H.) (ICHIKAWA)	1	5	R DRIVE 411	
	7	26125-10602	ASSY-LAMP,PARKING & TURN SIGNAL (L.H.) (KOITO)	1		R DRIVE 411	
	8	26125-10801	ASSY-LAMP,PARKING & TURN SIGNAL,WHITE (L.H.)	1		L DRIVE 411 (EXC, U.S.A.DENMARK)	
	9	26125-10800	ASSY-LAMP,PARKING & TURN SIGNAL,AMBER (L.H.)	1		411 U.S.A.	
	10	26125-18700	ASSY-LAMP,PARKING,WHITE (L.H.)	1		411 DENMARK	
	11	26135-18700	ASSY-LAMP,TURN SIGNAL, AMBER (L.H.)	1	1	411 DENMARK	
	12	26121-10600	LENS-PARKING & TURN SIGNAL LAMP (R.H.)	1		R DRIVE 411	
	13	26121-10801	LENS-PARKING & TURN SIGNAL LAMP WHITE (R.H.)	1		L DRIVE 411 (EXC, U.S.A.DENMARK)	

Printed in Japan

REVISED: SEPTEMBER.1968

S	KEY NO.	PART NO.	PART NAME	Q'TY	SALES UNIT	MODEL	ICA
	14	26121-10800	LENS-PARKING & TURN SIGNAL LAMP,AMBER (R.H.)	1	1	411 U.S.A.	
	15	26181-18700	LENS-PARKING,WHITE (R.H.)	1		411 DENMARK	
	16	26121-10800	LENS-TURN SIGNAL,AMBER (R.H.)	1	1	411 DENMARK	
	17	26126-10600	LENS-PARKING & TURN SIGNAL LAMP (L.H.)	1		R DRIVE 411	
	18	26126-10801	LENS-PARKING & TURN SIGNAL LAMP,WHITE (L.H.)	1		L DRIVE 411 (EXC. U.S.A.DENMARK)	
	19	26126-10800	LENS-PARKING & TURN SIGNAL LAMP,AMBER(L.H.)	1	1	411 U.S.A.	
	20	26186-18700	LENS-PARKING,WHITE (L.H.)	1	5	411 DENMARK	
	21	26126-10800	LENS-TURN SIGNAL,AMBER (L.H.)	1	1	411 DENMARK	
	22	00998-13910	SCREW	4		411	
	23	26123-10600	SEAT-PARKING & TURN SIGNAL LAMP (R.H.)	1		R DRIVE 411	
	24	26123-10800	SEAT-PARKING & TURN SIGNAL LAMP (R.H.)	1		L DRIVE 411	
	25	26128-10600	SEAT-PARKING & TURN SIGNAL LAMP (L.H.)	1		R DRIVE 411	
	26	26128-10800	SEAT-PARKING & TURN SIGNAL LAMP (L.H.)	1		L DRIVE 411	
	27	26143-10600	PACKING-LENS TO BODY	2	10	R DRIVE 411	
	28	26143-10800	PACKING-LENS TO BODY	2	2	L DRIVE 411	
	29	26715-04200	BULB (12V-25/8W)	16		L DRIVE 411 (EXC. U.S.A.DENMARK)	

Printed in Japan

REVISED: SEPTEMBER,1968

S	KEY NO.	PART NO.	PART NAME	Q'TY	SALES UNIT	MODEL	ICA
*	30	26716-07300	BULB (12V-8W)	2		411 DENMARK	
	31	00998-81210	SCREW	4		411	
	32	00915-41410	WASHER-PLAIN	4		411	
	33	00999-90310	WASHER-LOCK	4	50	411	
*	34	00999-20300	NUT	4	100	411	
	35	26144-10800	COLLAR-LAMP MOUNTING	4		L DRIVE 411	

REVISED: SEPTEMBER,1968

Printed in Japan

NOTE

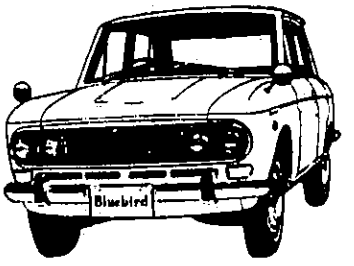

NOTE

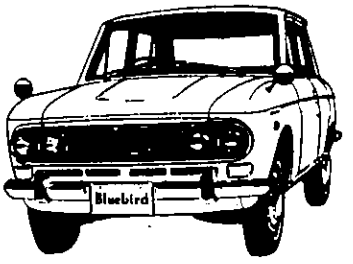

COMBINATION LAMP (TO MAR-66)

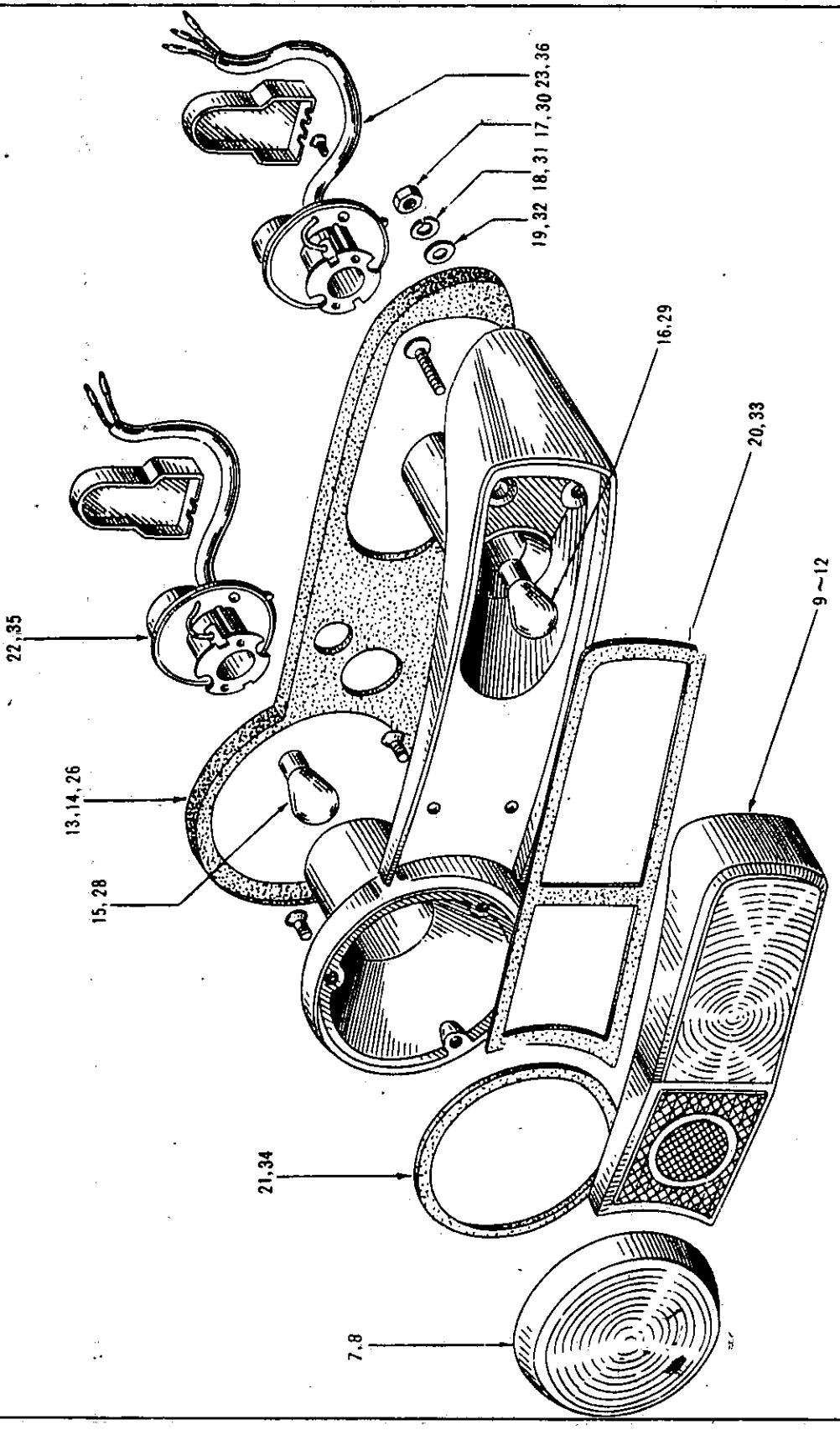

S	KEY NO.	PART NO.	PART NAME	Q'TY	SALES UNIT	MODEL	ICA
			COMBINATION LAMP (TO MAR-66)				
	1	26550-10800	ASSY-LAMP,COMBINATION (RED+RED) (R.H.) W/REFLECTOR (ICHIKAWA) (TO MAR-66)	1		411 (EXC. AUSTRALIA)	
	2	26550-10600	ASSY-LAMP,COMBINATION (RED+AMBER) (R.H.) (ICHIKAWA) (TO MAR-66)	1		411 AUSTRALIA	
	3	26550-10802-01	ASSY-LAMP,COMBINATION (RED AMBER) (R.H.) (ICHIKAWA) (TO MAR-66)	1		411 FINLAND	
	4	26555-10800	ASSY-LAMP,COMBINATION (L.H.) (TO MAR-66)	1		411 (EXC. AUSTRALIA)	
	5	26555-10600	ASSY-LAMP,COMBINATION (TO MAR-66)	1		411 AUSTRALIA	
	6	26555-10802-01	ASSY-LAMP,COMBINATION (TO MAR-66)	1		411 FINLAND	
	7	26531-10600	LENS-TAIL & STOP LAMP (RED) (ICHIKAWA) (TO MAR-66)	2		411	
	8	26531-10601	LENS-TAIL & STOP LAMP (RED) (KOITO) (TO MAR-66)	2		411	
	9	26521-10800	LENS-TURN SIGNAL LAMP (RED) (TO MAR-66)	2		411 (EXC. AUSTRALIA)	
	10	26521-10600	LENS-TURN SIGNAL LAMP(AMBER)(ICHIKAWA)(TO MAR-66)	2	1	411 AUSTRALIA	
	11	26521-10601	LENS-TURN SIGNAL LAMP (AMBER) (KOITO) (TO MAR-66)	2		411AUSTRALIA	
	12	26521-10802	LENS-TURN SIGNAL LAMP (AMBER) (KOITO) (TO MAR-66)	2		411 FINLAND	

Printed in Japan

REVISED: SEPTEMBER,1968

S	KEY NO.	PART NO.	PART NAME	Q'TY	SALES UNIT	MODEL	ICA
	13	26553-10600	SHEET-COMBINATION LAMP (R.H.) (TO MAR-66)	1		411	
	14	26558-10600	SHEET-COMBINATION LAMP (L.H.) (ICHIKAWA) (TO MAR-66)	1		411	
*	15	26715-04200	BULB (12V-25/8W) (TO MAR-66)	2		411	
*	16	26716-07300	BULB (12V-25W) (TO MAR-66)	2		411	
	17	00999-20310	NUT (TO MAR-66)	6		411	
	18	00999-90310	WASHER-LOCK (TO MAR-66)	6	50	411	
	19	00915-41410	WASHER-PLAIN (TO MAR-66)	6		411	
	20	26523-10600	PACKING-LENS TO LAMP BODY (TO MAR-66)	2		411	
	21	26533-10600	PACKING-LENS TO LAMP BODY (TO MAR-66)	2		411	
	22	26524-10600	ASSY-HARNESS,WITH SOCKET (TO MAR-66)	2		411	
	23	26534-10600	ASSY-HARNESS,WITH SOCKET (TO MAR-66)	2		411	
	24	26521-10600	LENS-TURN SIGNAL LAMP (AMBER) (ICHIKAWA) (TO MAR-66)	2	1	411 AUSTRALIA	
	25	26521-10601	LENS-TURN SIGNAL LAMP (AMBER) (KOITO) (TO MAR-66)	2		411 AUSTRALIA	
	26	26553-10600	SHEET-COMBINATION LAMP (R.H.)(ICHIKAWA)(TO MAR-66)	1		411	
	27	26558-10600	SHEET-COMBINATION LAMP (L.H.)(ICHIKAWA)(TO MAR-66)	1		411	
*	28	26715-04200	BULB (12V-25/8W) (TO MAR-66)	2		411	

Printed in Japan

REVISED SEPTEMBER,1968

S	KEY NO.	PART NO.	PART NAME	Q'TY	SALES UNIT	MODEL	ICA
*	29	26716-07300	BULB (12V-25W) (TO MAR-66)	2		411	
	30	00999-20310	NUT (TO MAR-66)	6		411	
	31	00999-90310	WASHER-LOCK (TO MAR-66)	6	50	411	
	32	00915-41410	WASHER-PLAIN (TO MAR-66)	6		411	
	33	26523-10600	PACKING-LENS TO LAMP BODY (ICHIKAWA) (TO MAR-66)	2		411	
	34	26533-10600	PACKING-LENS TO LAMP BODY (ICHIKAWA) (TO MAR-66)	2		411	
	35	26524-10600	ASSY-HARNESS,WITH SOCKET (ICHIKAWA) (TO MAR-66)	2		411	
	36	26534-10600	ASSY-HARNESS,WITH SOCKET (ICHIKAWA) (TO MAR-66)	2		411	

REVISED: SEPTEMBER,1968

Printed in Japan

NOTE

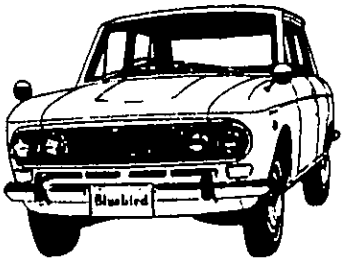

NOTE

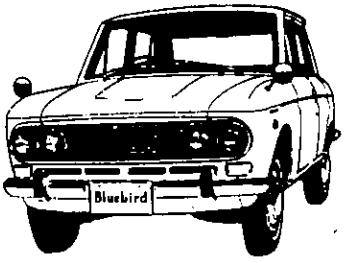

COMBINATION LAMP (FROM APR-66)

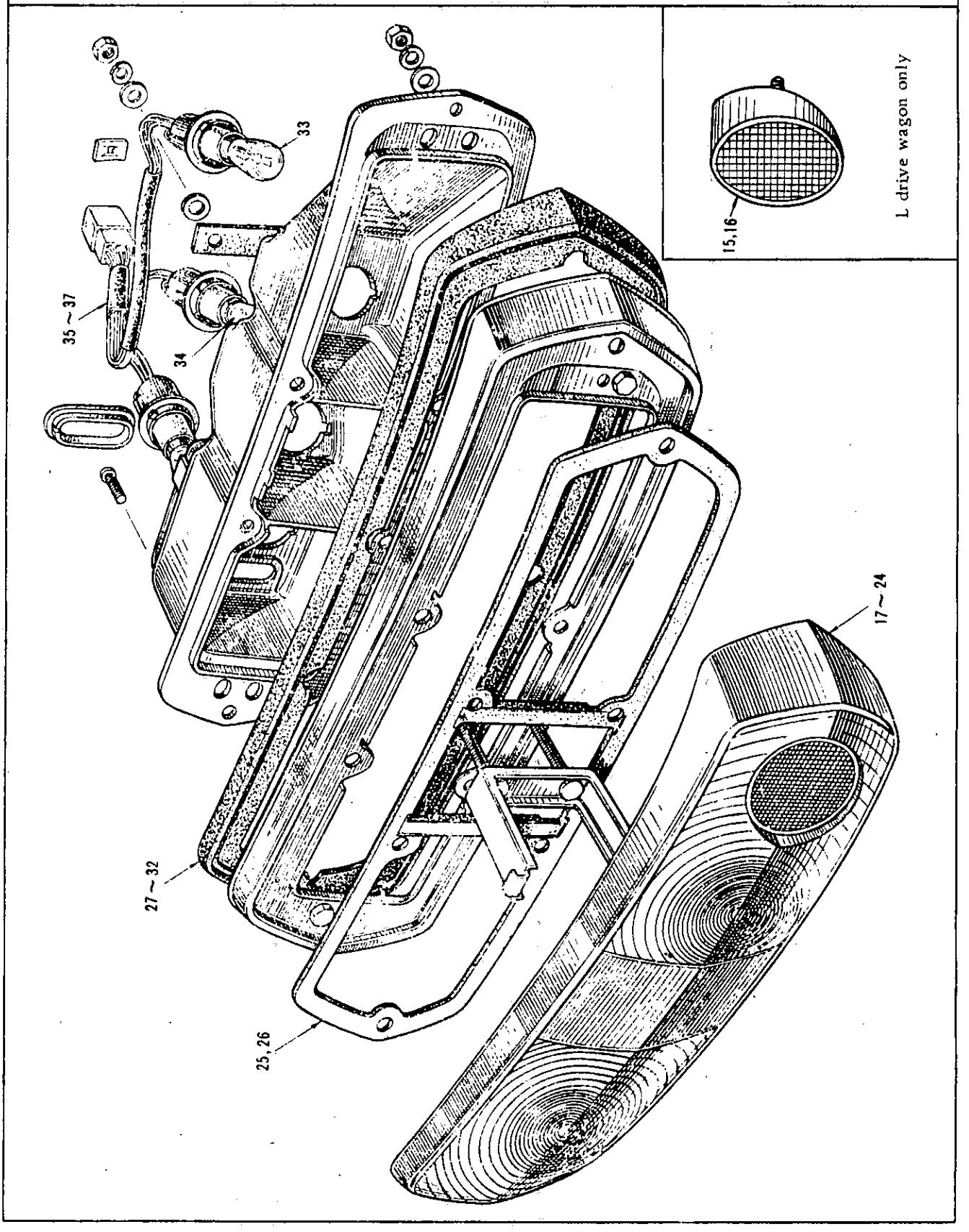

SEPTEMBER, 1968 Printed in Japan

S	KEY NO.	PART NO.	PART NAME	QTY	SALES UNIT	MODEL	ICA
			COMBINATION LAMP (FROM APR-66)				
	1	26550-18400	ASSY-LAMP,COMBINATION R.H. (FROM APR-66) (RED+WHITE+RED)	1	1	SEDAN 411 (EXC.AUSTRALIA & DENMARK)	
	2	26555-18400	ASSY-LAMP,COMBINATION L.H. (FROM APR-66) (RED+WHITE+RED)	1	5	SEDAN 411 (EXC,AUSTRALIA & DENMARK)	
	3	26550-19100	ASSY-LAMP,COMBINATION R.H. (FROM APR-66) (ICHIKAWA) (AMBER+WHITE+RED)	1	1	SEDAN 411 (AUSTRALIA & DENMARK ONLY)	
	4	26550-19101	ASSY-LAMP,COMBINATION R.H. (FROM APR-66) (ICHIKAWA) (AMBER+WHITE+RED)	1		SEDAN 411 (AUSTRALIA & DENMARK ONLY)	Y
	5	26555-19100	ASSY-LAMP,COMBINATION L.H. (FROM APR-66) (ICHIKAWA) (AMBER+WHITE+RED)	1	1	SEDAN 411 (AUSTRALIA & DENMARK ONLY)	
	6	26555-19101	ASSY-LAMP,COMBINATION L.H. (FROM APR-66) (ICHIKAWA) (AMBER+WHITE+RED)	1		SEDAN 411 (AUSTRALIA & DENMARK ONLY)	Y
	7	26550-19600	ASSY-LAMP,COMBINATION R.H. (FROM APR-66) (RED+WHITE+RED)	1		WU.WUT(EXC, AUSTRALIA & DENMARK)	
	8	26555-19600	ASSY-LAMP,COMBINATION L.H. (FROM APR-66) (RED+WHITE+RED)	1		WU.WUT(EXC, AUSTRALIA & DENMARK)	
	9	26550-19800	ASSY-LAMP,COMBINATION R.H. (FROM APR-66) (AMBER+WHITE+RED)	1	1	WU.WUT(EXC, AUSTRALIA & DENMARK)	

Printed in Japan
REVISED: SEPTEMBER,1968

S	KEY NO.	PART NO.	PART NAME	Q'TY	SALES UNIT	MODEL	ICA
	10	26550-19805	ASSY-LAMP,COMBINATION R.H. (FROM APR-66) (AMBER+WHITE+RED)	1	1	WU.WUT(EXC, AUSTRALIA & DENMARK)	Y
	11	26555-19800	ASSY-LAMP,COMBINATION L.H. (FROM APR-66) (AMBER+WHITE+RED)	1		WU.WUT(EXC, AUSTRALIA & DENMARK)	
	12	26555-19805	ASSY-LAMP,COMBINATION L.H. (FROM APR-66) (AMBER+WHITE+RED)	1	1	WU.WUT(EXC, AUSTRALIA & DENMARK)	Y
	13	26550-19802	ASSY-LAMP,COMBINATION R.H. (FROM APR-66) (RED+WHITE RED)	1		L DRIVE WAGON 411	
	14	26555-19802	ASSY-LAMP,COMBINATION L.H. (FROM APR-66) (RED+WHITE RED)	1		L DRIVE WAGON 411	
	15	26560-19701	ASSY-REFLECTOR R.H. (FROM APR-66)	1		L DRIVE WAGON 411	
	16	26565-19701	ASSY-REFLECTOR L.H. (FROM APR-66)	1		L DRIVE WAGON 411	
	17	26551-18400	LENS-COMBINATION R.H. (FROM APR-66) (RED+WHITE+RED)	1	1	SEDAN R DRIVE WAGON 411(EXC. AUSTRALIA & DENMARK)	
	18	26556-18400	LENS-COMBINATION L.H. (FROM APR-66) (RED+WHITE+RED)	1	1	SEDAN R DRIVE WAGON 411(EXC. AUSTRALIA & DENMARK)	
	19	26551-19100	LENS-COMBINATION LAMP R.H. (FROM APR-66) (AMBER+WHITE+RED)	1	1	SEDAN R DRIVE WAGON(AUSTRALIA DENMARK ONLY)	
	20	26551-19101	LENS-COMBINATION LAMP R.H. (FROM APR-66) (AMBER+WHITE+RED)	1		SEDAN R DRIVE WAGON(AUSTRALIA DENMARK ONLY)	N

REVISED SEPTEMBER,1968

Printed in Japan

S	KEY NO.	PART NO.	PART NAME	Q'TY	SALES UNIT	MODEL	ICA
	21	26556-19100	LENS-COMBINATION LAMP L.H. (FROM APR-66) (AMBER+WHITE+RED)	1	1	SEDAN R DRIVE WAGON(AUSTRALIA DENMARK ONLY)	
	22	26556-19101	LENS-COMBINATION LAMP L.H. (FROM APR-66) (AMBER+WHITE+RED)	1		SEDAN R DRIVE WAGON(AUSTRALIA DENMARK ONLY)	N.
	23	26551-19802	LENS-COMBINATION LAMP R.H. (FROM APR-66) (RED+WHITE+RED) WITHOUT REFLECTOR	1		L DRIVE WAGON 411	
	24	26556-19802	LENS-COMBINATION LAMP L.H. (FROM APR-66) (RED+WHITE+RED) WITHOUT REFLECTOR	1		L DRIVE WAGON 411	
	25	26552-18400	PACKING-LENS (ICHIKAWA) (FROM APR-66)	2	5	411	
	26	26552-18410	PACKING-LENS (KOITO) (FROM APR-66)	2		411	
	27	26553-18400	SHEET-PACKING (R.H.) (ICHIKAWA) (FROM APR-66)	1	5	SEDAN 411	
	28	26553-18410	SHEET-PACKING (R.H.) (KOITO) (FROM APR-66)	1		SEDAN 411	
	29	26553-19600	SHEET-PACKING (R.H.) (ICHIKAWA) (FROM APR-66)	1		WAGON 411	
	30	26558-18400	SHEET-PACKING (L.H.) (ICHIKAWA) (FROM APR-66)	1	5	SEDAN 411	
	31	26558-18410	SHEET-PACKING (L.H.) (KOITO) (FROM APR-66)	1		SEDAN 411	
	32	26558-19600	SHEET-PACKING (L.H.) (ICHIKAWA) (FROM APR-66)	1		WAGON 411	
*	33	26715-04200	BULB (12V-25/8W) (FROM APR-66)	4		411	

S	KEY NO.	PART NO.	PART NAME	Q'TY	SALES UNIT	MODEL	ICA
*	34	26716-07300	BULB (12V-25W) (FROM APR-66)	2		411 (EXC, AUSTRALIA DENMARK)	
	35	26561-18400	ASSY-HARNESS (FROM APR-66)	2	1	411 (AUSTRALIA ONLY DENMARK)	
	36	26561-19100	ASSY-HARNESS (FROM APR-66)	2	1	411 (AUSTRALIA ONLY DENMARK)	
	37	26561-19100	ASSY-HARNESS (FROM APR-66)	2	1	(AUSTRALIA ONLY DENMARK) 411	N

REVISED: SEPTEMBER, 1968

Printed in Japan

NOTE

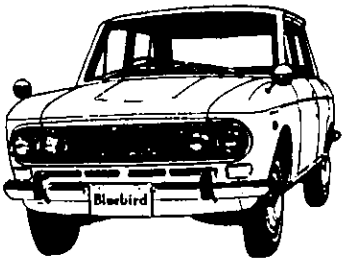

FOG, INSPECTION & REVERSE LAMP

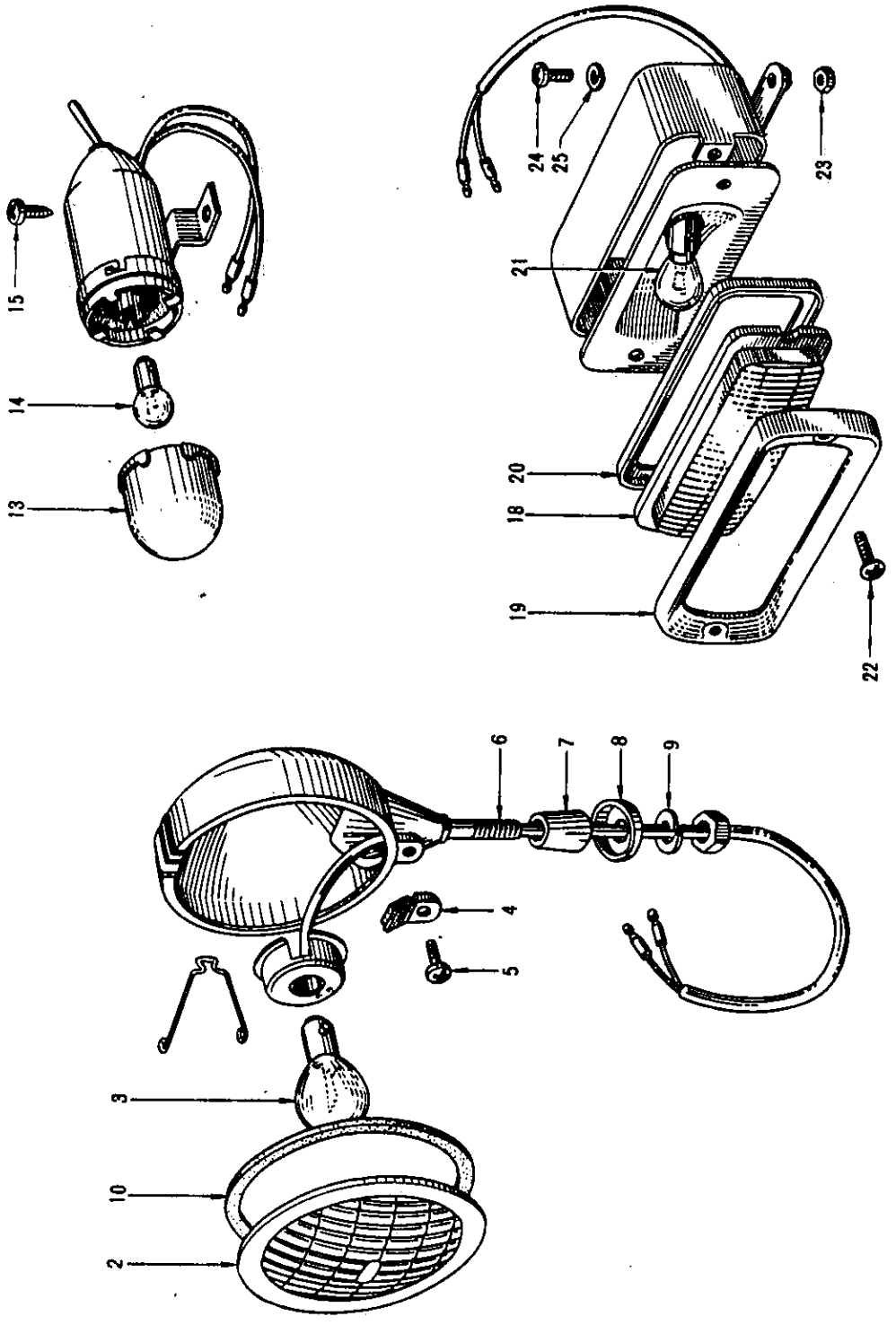

FOG, INSPECTION & REVERSE LAMP

S	KEY NO.	PART NO.	PART NAME	Q'TY	SALES UNIT	MODEL	ICA
	1	26150-11400	ASSY-LAMP,FOG	2		OP.411	
	2	26151-11400	ASSY-LENS,FOG LAMP	2		OP.411	
*	3	26713-34200	BULB (12V-35W)	2		OP.411	
	4	26152-30800	ASSY-HOLDER,LENS	2		OP.411	
	5	00998-52810	SCREW	2		OP.411	
	6	26157-11400	BOLT	2		OP.411	
	7	26156-11400	COLLAR-FOG LAMP	2	1	OP.411	
	8	26158-11400	SPACER-FOG LAMP	2		OP.411	
	9	00999-90610	WASHER-LOCK	2		OP.411	
	10	26153-36700	PACKING-SEAL	2	2	OP.411	
*	11	26230-30100	ASSY-LAMP,INSPECTION (GLASS)	1		OP.411	
	12	26740-89902	ASSY-LAMP,INSPECTION (PLASTIC)	1		OP.411	
	13	26231-01300	LENS-INSPECTION LAMP	1		OP.411	
	14	26232-30000	BULB (12V-8W)	1		OP.411	
	15	00511-41010	SCREW (TO FIX LAMP)	1	50	OP.411	
	16	26745-89900	SWITCH-INSPECTION LAMP	1		OP.411	
	17	26540-11401	ASSY-LAMP,REVERSE	1		411	
	18	26231-02700	LENS-REVERSE LAMP	1		411	
	19	26233-02700	RIM-REVERSE LAMP	1		411	
	20	26234-02700	PACKING-REVERSE LAMP	1		411	
*	21	26716-07300	BULB (12V-25W)	1		411	
	22	00998-81120	SCREW	2	50	411	

REVISED: SEPTEMBER,1968

Printed in Japan

S	KEY NO.	PART NO.	PART NAME	Q'TY	SALES UNIT	MODEL	ICA
	23	00999-20200	NUT	2	50	411	
	24	00998-52420	SCREW	2		411	
	25	00999-90210	WASHER-LOCK	2	50	411	

Printed in Japan

REVISED: SEPTEMBER, 1968

NOTE

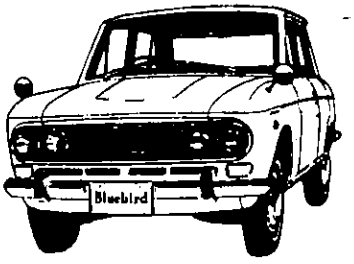

SIDE MARKER & ROOM LAMP

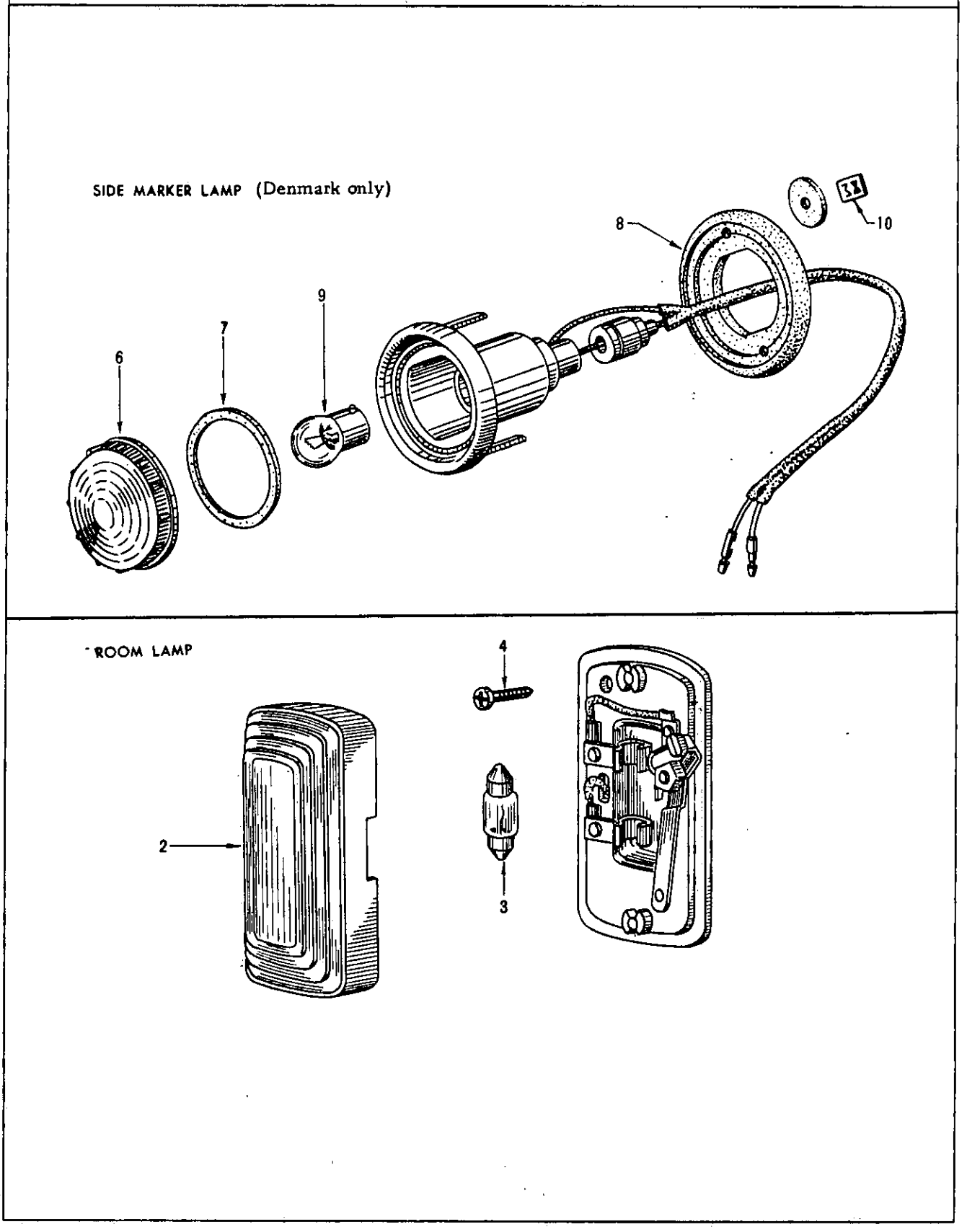

S	KEY NO.	PART NO.	PART NAME	Q'TY	SALES UNIT	MODEL	ICA
			SIDE MARKER & ROOM LAMP				
	1	26410-16600	ASSY-LAMP,ROOM	1		411	
	2	26411-16500	LENS-ROOM LAMP	1	1	411	
*	3	26718-10600	BULB (12V-5W)	1		411	
	4	00510-62610	SCREW	2	50	411	
	5	26160-10600	ASSY-LAMP,SIDE MARKER	2		411 DENMARK	
	6	26181-10600	LENS-SIDE MARKER LAMP (AMBER)	2		411 DENMARK	
	7	26189-10600	PACKING-LENS,SIDE MARKER LAMP	2		411 DENMARK	
	8	26163-10600	PACKING-SIDE MARKER LAMP	2		411 DENMARK	
*	9	26717-10600	BULB (12V-8W)	2		411 DENMARK	
	10	00918-11000	SPIRE-FIXING	4		411 DENMARK	

Printed in Japan

REVISED: SEPTEMBER,1968

NOTE

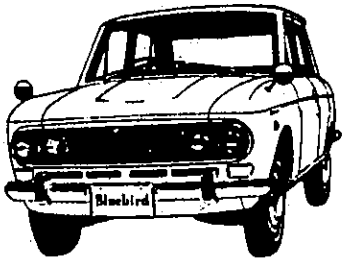

NOTE

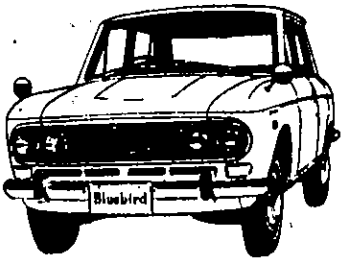

LICENCE LAMP

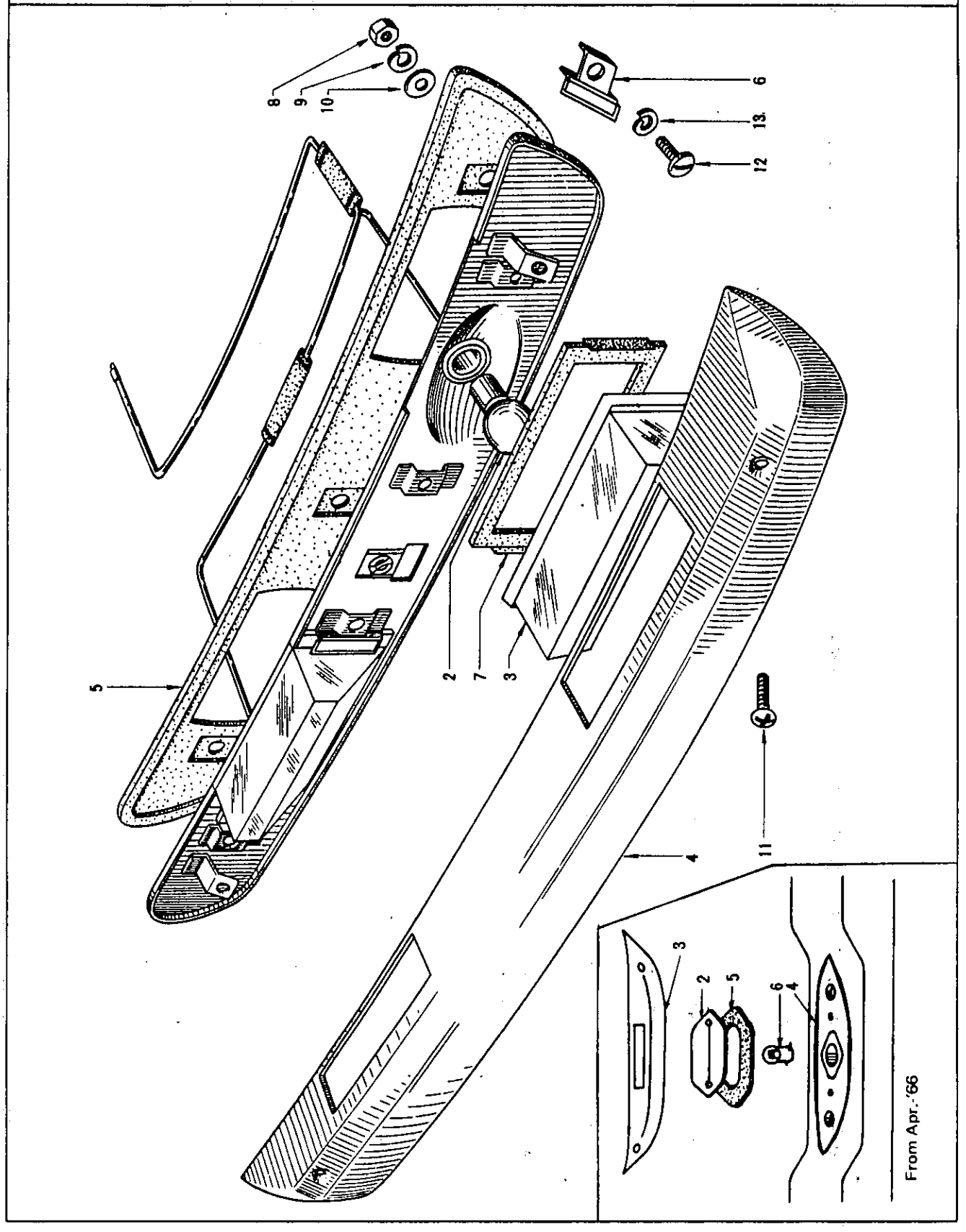

S	KEY NO.	PART NO.	PART NAME	Q'TY	SALES UNIT	MODEL	ICA
			LICENCE LAMP				
	1	26510-13200	ASSY-LAMP,LICENCE (UP TO MAR.-66)	1	2	411	
	2	26717-04200	BULB (12V-8W)	2		411	
	3	26511-13200	LENS-LICENCE LAMP	2		411	
	4	26512-10600	RIM-LICENCE LAMP	1	1	411	
	5	26513-13200	SHEET-LICENCE LAMP	1		411	
	6	26517-10600	CLAMP-LENS,LICENCE LAMP	4		411	
	7	26518-13200	PACKING-LENS TO LAMP BODY	2	10	411	
	8	00999-20210	NUT	3		411	
	9	00999-90210	WASHER-LOCK	3	50	411	
	10	00915-41010	WASHER-PLAIN	3		411	
	11	00998-81120	SCREW	2	50	411	
	12	00998-51010	SCREW	4	50	411	
	13	00999-90110	WASHER-LOCK	4		411	
	14	26510-18400	ASSY-LAMP,LICENCE (FROM APR.-66)	1	1	411	
	15	26511-18400	LENS	1		411	
	16	26512-18400	COVER	1		411	
	17	26513-18400	SHEET	1		411	
	18	26518-18400	PACKING	1	5	411	
	19	00999-90210	WASHER	2	50	411	
	20	00915-41010	WASHER	2		411	
	21	00999-20210	NUT	2		411	

Printed in Japan

REVISED: SEPTEMBER,1968

S	KEY NO.	PART NO.	PART NAME	Q'TY	SALES UNIT	MODEL	ICA
	22	00998-81420	SCREW	2		411	
	23	00998-51410	SCREW	2	50	411	
	24	26717-04200	BULB (12V-8W)	1		411	

Printed in Japan

REVISED: SEPTEMBER, 1968

NOTE

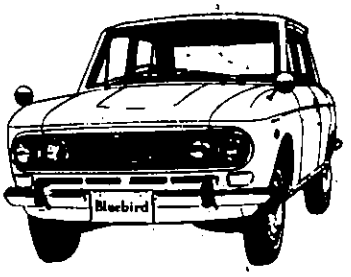

CLUTCH (1.3 L EXC UTK)

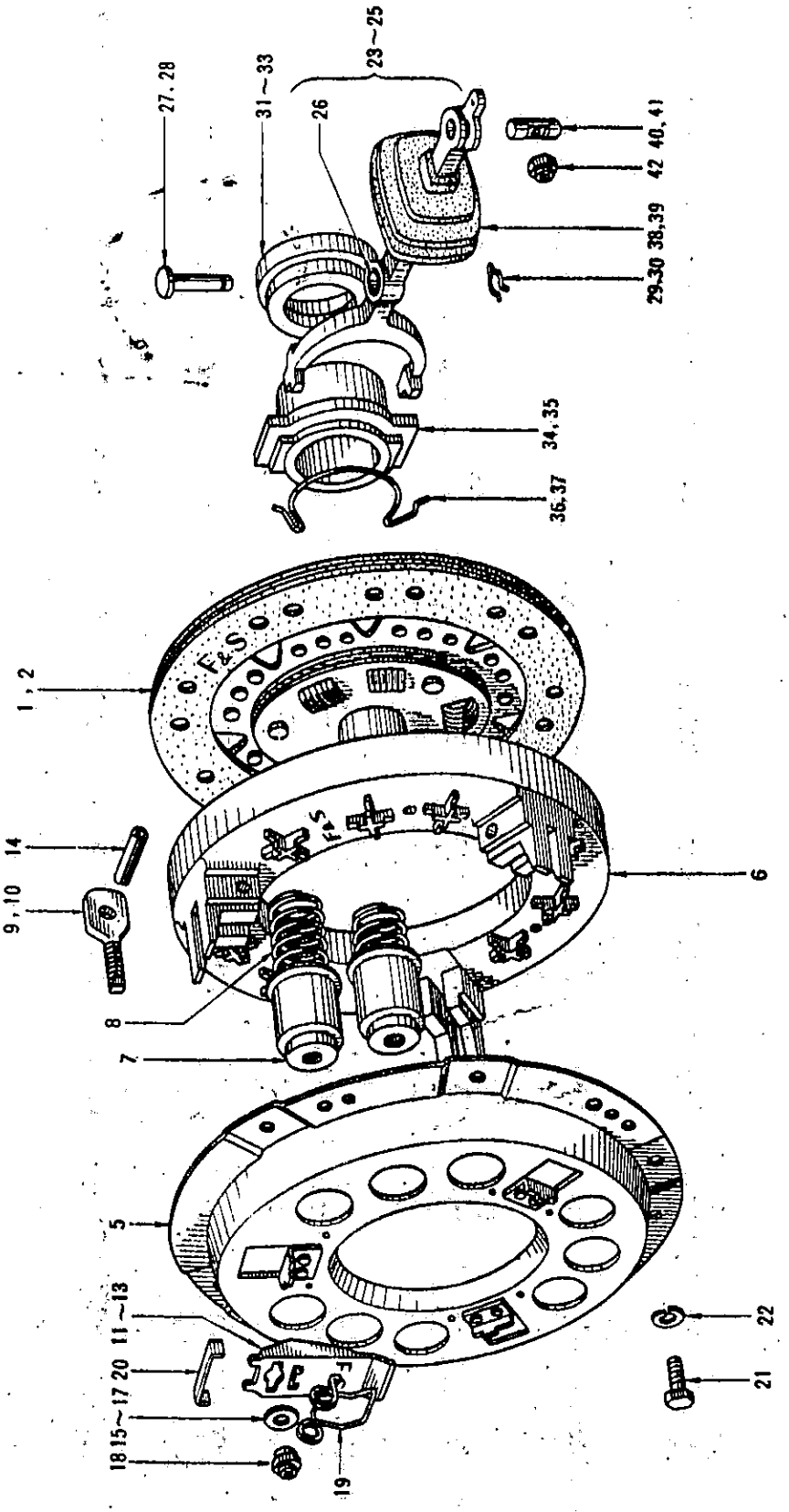

CLUTCH (1.3 L EXC UTK)

S	KEY NO.	PART NO.	PART NAME	Q'TY	SALES UNIT	MODEL	ICA
	1	30100-10601	ASSY-DISC,CLUTCH (F&S) (TO SEP-65)	1		411 (EXC. UTK,1.6L)	
	2	30100-~~14800~~ 23005	ASSY-DISC,CLUTCH (F&S) (FROM OCT.-65)	1		4 SPEED 411 (EXC. UTK,1.6L)	N
*	3	30210-10601	ASSY-COVER,CLUTCH,WITH PLATE (F&S,37KG) (TO E/# J-377458)	1		411 (EXC. UTK,1.6L)	
	4	30210-~~24000~~ W0300	ASSY-COVER,CLUTCH,WITH PLATE (FROM E/# J-377459)	1		411 (EXC. UTK,1.6L)	Y
*	5	30209-10601	ASSY-COVER,CLUTCH (F&S)	1		411 (EXC. UTK,1.6L)	
	6	30213-10600	PLATE-PRESSURE (F&S)	1		411 (EXC. UTK,1.6L)	
	7	30215-10600	RETAINER-PRESSURE SPRING (F&S)	9	1	411 (EXC. UTK,1.6L)	
	8	30214-10602	SPRING-PRESSURE (F&S,37KG)	9		411 (EXC. UTK,1.6L)	
	9	30224-10600	BOLT-PRESSURE PLATE (F&S)	2		411 (EXC. UTK,1.6L)	
	10	30224-10601	BOLT-PRESSURE PLATE (F&S)	3		411 (EXC. UTK,1.6L)	Y
*	11	30221-10600	LEVER-RELEASE (F&S)	3		411 (EXC. UTK,1.6L)	
*	12	30221-10602	LEVER-RELEASE (F&S) (TO E/# T-377458)	3		411 (EXC. UTK,1.6L)	Y
	13	30221-24000	LEVER-RELEASE (F&S) (FROM E/# T-377459)	3		411 (EXC. UTK,1.6L)	Y
	14	30225-35720	PIN-EYE BOLT (F&S)	3		411 (EXC. UTK,1.6L)	

Printed in Japan

REVISED: SEPTEMBER, 1968

S	KEY NO.	PART NO.	PART NAME	Q'TY	SALES UNIT	MODEL	ICA
	15	30239-10600	SEAT-RELEASE LEVER (F&S)	3		411 (EXC. UTK,1.6L)	
	16	30239-10601	SEAT-RELEASE LEVER (F&S)	3		411 (EXC. UTK,1.6L)	Y
	17	30239-10602	SEAT-RELEASE LEVER (F&S)	3		411 (EXC. UTK,1.6L)	Y
	18	30229-10600	NUT-LOCK (F&S)	3		411 (EXC. UTK,1.6L)	
	19	30231-10600	SPRING-RETRACTING (F&S)	3		411 (EXC. UTK,1.6L)	
	20	30251-35720	SUPPORT-RELEASE LEVER	3		411 (EXC. UTK,1.6L)	
	21	00124-52200	BOLT TO FIX COVER	6	100	411 (EXC. UTK,1.6L)	
	22	00915-21500	WASHER-LOCK TO FIX COVER	6	50	411 (EXC. UTK,1.6L)	
	23	30530-10600	ASSY-LEVER,WITHDRAWAL, CLUTCH	1	1	411 (EXC. UTK,1.6L)	
	24	30530-10601	ASSY-LEVER,WITHDRAWAL, CLUTCH (TO SEP-65)	1		411 (EXC, UTK,1.6L)	Y
	25	30531-14602	ASSY-LEVER,WITHDRAWAL, CLUTCH (FROM OCT.-65)	1	1	4 SPEED 411(EXC. UTK,1.6L)	N
	26	30532-04100	BUSHING-WITHDRAWAL LEVER	1	10	411 (EXC. UTK,1.6L)	
	27	30537-04100	PIN-WITHDRAWAL LEVER (TO SEP-65)	1	5	411 (EXC, 4 SPEED)	
	28	30537-15800	PIN-WITHDRAWAL LEVER (FROM OCT-65)	1	5	4 SPEED 411(EXC. UTK,1.6L)	N
	29	30541-08000	SPRING-RETAINER (TO SEP-65)	1	10	P CLUTCH 411 (EXC. 4 SPEED)	
	30	30534-14601	SPRING-RETAINER (FROM OCT.-65)	1	10	4 SPEED 411 (EXC. UTK,1.6L)	N

SEPTEMBER,1968

Printed in Japan

S	KEY NO.	PART NO.	PART NAME	Q'TY	SALES UNIT	MODEL	ICA
	31	30502-32200	BEARING-CLUTCH RELEASE (F&S)	1	1	411 (EXC. UTK,1.6L)	
	32	30502-13200	BEARING-CLUTCH RELEASE (F&S)	1	10	P-U,PL-U, WU,WL-U 411	Y
	33	30502-14800	BEARING-CLUTCH RELEASE (F&S)	1	1	UT,L-UT, WUT,WL-UT 411	N
*	34	30501-10602	SLEEVE-BEARING (F&S) (TO SEP-65)	1	1	1.3L 411 (EXC.4 SPEED)	
	35	30501-14800	SLEEVE-BEARING (F&S) (FROM OCT.-65)	1	1	4 SPEED 411 (EXC. UTK,1.6L)	N
	36	30514-08000	RETAINER-SPRING,WITHDRAWAL LEVER (TO SEP-65)	1	5	1.3L 411 (EXC.4 SPEED)	
	37	30514-14600	RETAINER-SPRING,WITHDRAWAL LEVER (FROM OCT.-65)	1	10	4 SPEED 411 (EXC. UTK,1.6L)	N
	38	30542-10600	COVER-DUST,WITHDRAWAL LEVER (TO SEP-65)	1	10	1.3L 411 (EXC.4 SPEED)	
	39	30542-14601	COVER-DUST,WITHDRAWAL LEVER (FROM OCT.-65)	1	5	4 SPEED 411 (EXC. UTK,1.6L)	N
	40	30547-32201	TRUNNION-WITHDRAWAL LEVER (TO SEP-65)	1	50	411 (EXC. 4 SPEED)	
*	41	30547-14600	TRUNNION-WITHDRAWAL LEVER (FROM OCT.-65)	1	50	4 SPEED 411 (EXC. UTK,1.6L)	N
	42	30548-32201	NUT-LOCK,PUSH ROD	1	1	411 (EXC. UTK,1.6L)	

REVISED: SEPTEMBER,1968

Printed in Japan

NOTE

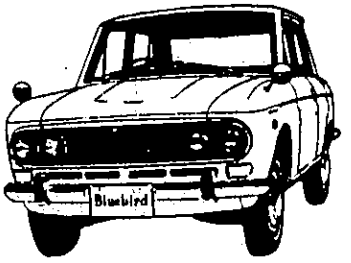

NOTE

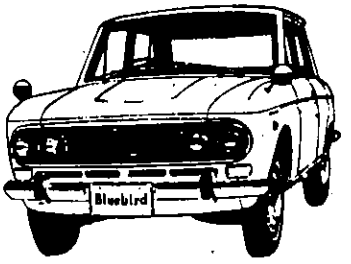

CLUTCH (1.6 L & UTK)

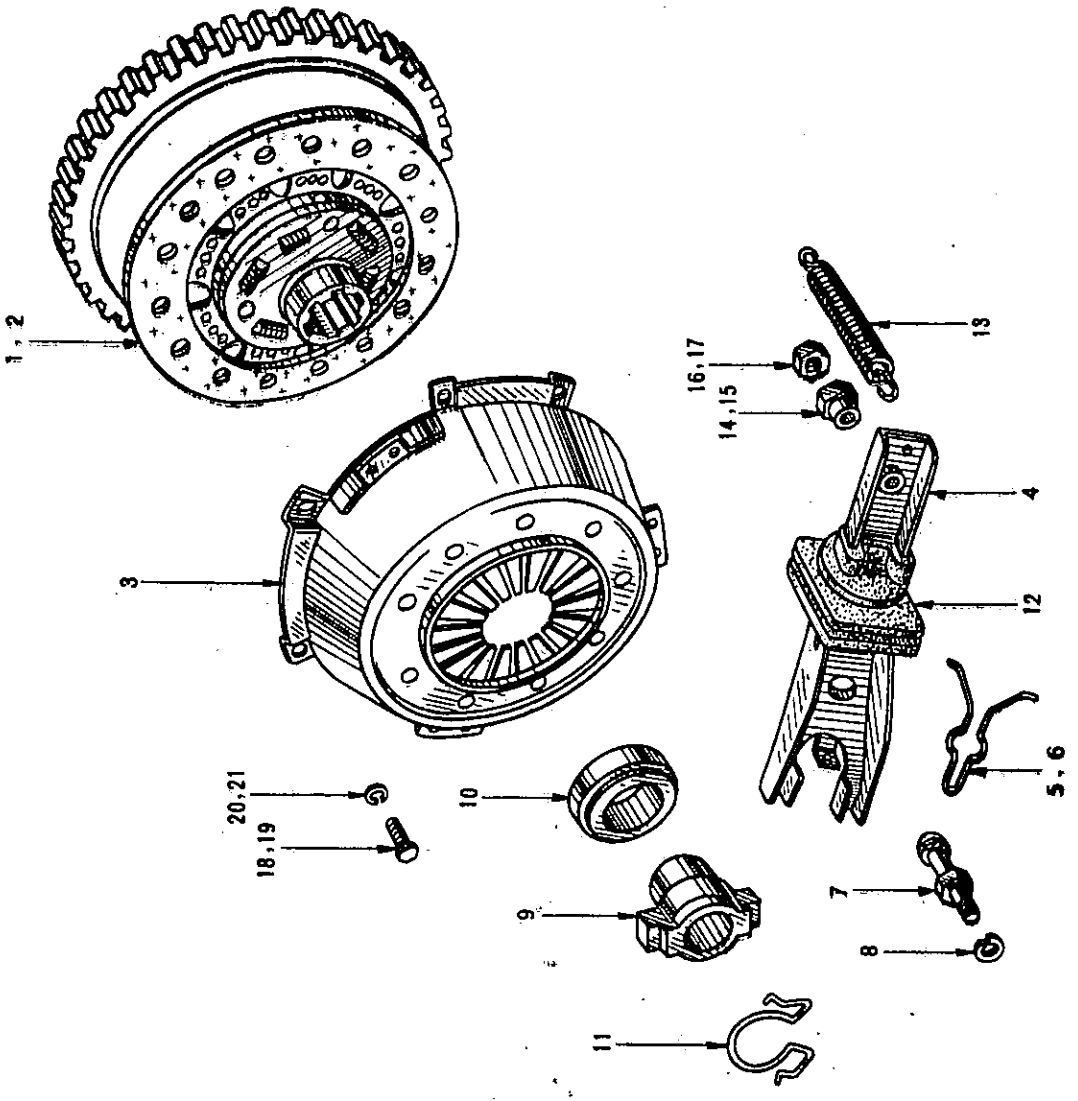

S	KEY NO.	PART NO.	PART NAME	QTY	SALES UNIT	MODEL	ICA
			CLUTCH (1.6 L & UTK)				
*	1	30100-14600	ASSY-DISC,CLUTCH (TO SEP-65)	1		UTK,1.6L 411	
	2	30100-15800	ASSY-DISC,CLUTCH (FROM OCT.-66)	1		UTK,1.6L 411	Y
	3	30210-14600	ASSY-COVER,CLUTCH WITH PLATE	1		UTK,1.6L 411	
	4	30531-14602	LEVER-CLUTCH WITHDRAWAL	1	1	UTK,1.6L 411	
*	5	30534-14601	SPRING-RETAINER,WITHDRAWAL	1	10	UTK,1.6L 411	
*	6	30534-14602	SPRING-RETAINER,WITHDRAWAL	1	10	UTK,1.6L 411	Y
	7	30537-15800	PIN-BALL,WITHDRAWAL LEVER	1	5	UTK,1.6L 411	
	8	00915-11610	WASHER-LOCK	1		UTK,1.6L 411	
	9	30501-14601	SLEEVE-BEARING,CLUTCH RELEASE	1	1	UTK,1.6L 411	
*	10	30502-14600	BEARING-CLUTCH RELEASE	1	1	UTK,1.6L 411	
	11	30514-14600	SPRING-HOLDER,BEARING SLEEVE	1	10	UTK,1.6L 411	
	12	30542-14601	COVER-DUST,CLUTCH WITHDRAWAL LEVER	1	5	UTK,1.6L 411	
	13	30533-16500	SPRING-RETURN	1	10	UTK,1.6L 411	
*	14	30547-14600	NUT-LOCK,PUSH ROD	1	50	UTK,1.6L 411	
	15	30547-78000	NUT-LOCK,PUSH ROD	1		UTK,1.6L 411	C

S	KEY NO.	PART NO.	PART NAME	Q'TY	SALES UNIT	MODEL	ICA
	16	12112-02700	NUT-PAL	1	50	UTK,1.6L 411	
	17	00911-34510	NUT-PAL	1	50	UTK,1.6l 411	C
	18	00124-52210	BOLT (TO E/# R-40000) TO FIX CLUTCH COVER	6	50	UTK,1.6l 411	
	19	08120-82010	BOLT (FROM R-40001) TO FIX CLUTCH COVER	6		UTK,1.6L 411	N
	20	00915-21510	WASHER-LOCK (TO E/# R-40000)	6		UTK,1.6L 411	
	21	08915-23810	WASHER (FROM R-40001)	6	50	UTK,1.6l 411	N

Printed in Japan

REVISED: SEPTEMBER,1968

NOTE

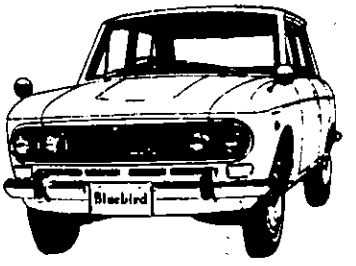

CLUTCH OPERATING CYLINDER

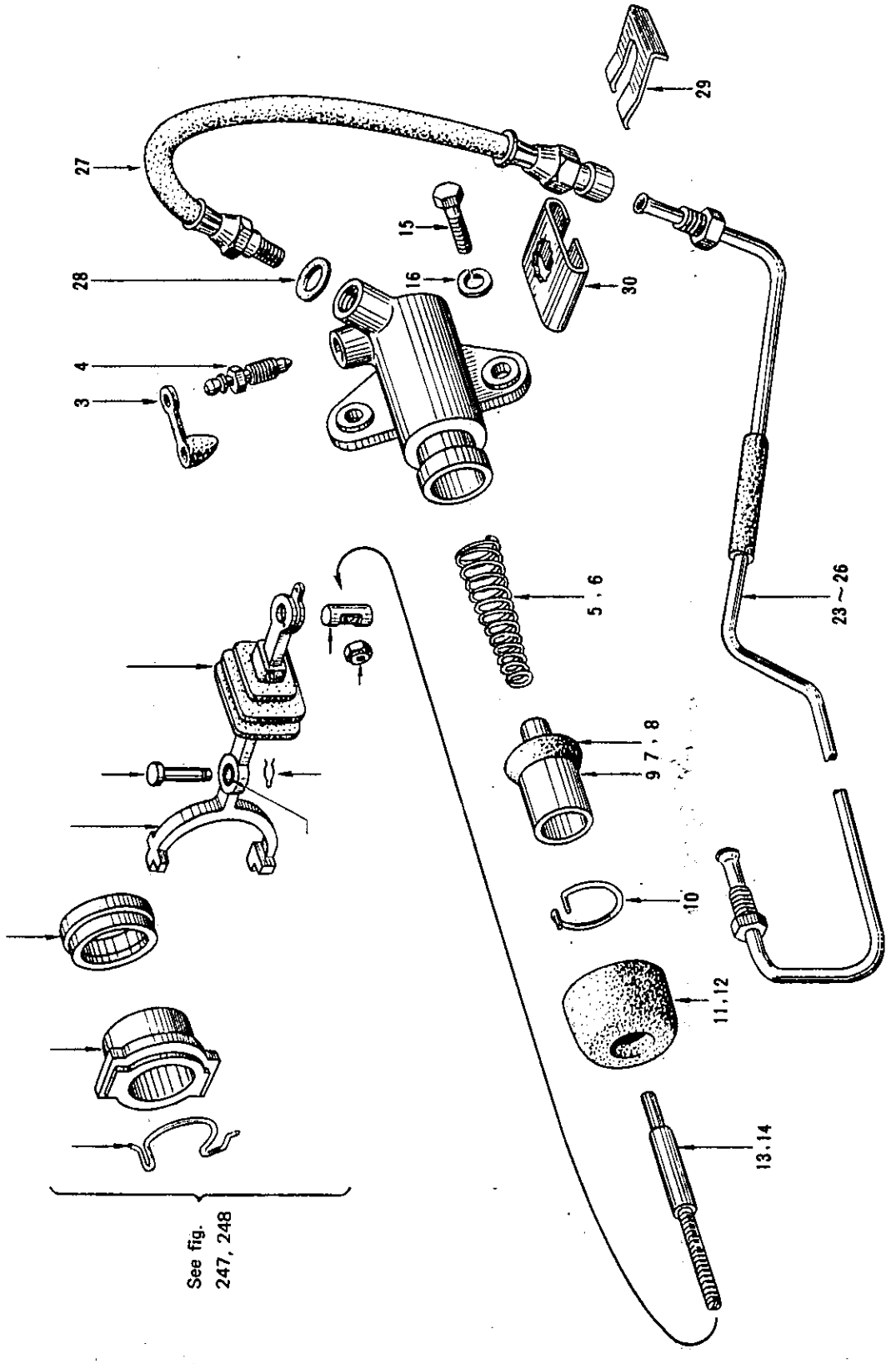

S	KEY NO.	PART NO.	PART NAME	Q'TY	SALES UNIT	MODEL	ICA
			CLUTCH OPERATING CYLINDER				
	1	30620-10600	ASSY-CYLINDER,CLUTCH OPERATING (TO SEP-65)	1		411	
*	2	30620-15800	ASSY-CYLINDER,CLUTCH OPERATING (FROM OCT.-65)	1	1	4 SPEED 411	N
	3	41129-30001	CAP-BLEEDER	1		411	
	4	41128-30001	SCREW-BLEEDER	1		411	
	5	30622-30001	SPRING-PISTON (TOKICO)	1	10	411	
	6	30622-36900	SPRING-PISTON (NABCO)	1	10	411	
*	7	30624-30001	CUP-PISTON (TOKICO)	1	50	411	
	8	30624-30002	CUP-PISTON (NABCO)	1	10	411	
	9	30625-27260	PISTON-CLUTCH OPERATING	1	5	411	
	10	30626-30001	RING-SNAP	1	10	411	
	11	30627-10610	COVER-DUST (TOKICO)	1	5	411	
	12	30627-32200	COVER-DUST (NABCO)	1	10	411	
	13	30628-10610	ROD-PUSH (TOKICO)	1	5	411	
	14	30628-10600	ROD-PUSH (NABCO)	1	5	411	
	15	00124-63010	BOLT TO FIX OPERATING CYLINDER	2	50	411	
	16	00915-21610	WASHER-LOCK TO FIX OPERATING CYLINDER	2		411	
*	17	30620-10625	KIT-REPAIR "A" (NABCO) (INC.1,4,6,7)	1	1	411	
	18	30620-10626	KIT-REPAIR "B" (NABCO) (INC.1,3,4,5,6,7)	1	1	411	

Printed in Japan

REVISED: SEPTEMBER,1968

S	KEY NO.	PART NO.	PART NAME	Q'TY	SALES UNIT	MODEL	ICA
	19	30620-08025	KIT-REPAIR "A" (NABCO) (INC.1,4,6,7) (FROM OCT.-65)	1	1	411	
	20	30620-15826	KIT-REPAIR "B" (NABCO) (INC.1,3,4,5,6,7) (FROM OCT.-65)	1	1	411	
	21	30620-10627	KIT-REPAIR "A" (TOKICO) (INC.1,4,6,7)	1	1	411	
	22	30620-10628	KIT-REPAIR "B" (TOKICO) (INC.1,3,4,5,6,7)	1	1	411	
	23	46410-10601	ASSY-TUBE,CLUTCH MASTER CYLINDER TO HOSE	1	1	U,WU,UT, WUT 411	
	24	46410-15801	ASSY-TUBE,CLUTCH MASTER CYLINDER TO HOSE	1	1	UTK, 411	
	25	46410-10801	ASSY-TUBE,CLUTCH MASTER CYLINDER TO HOSE	1	1	LU,WLU,LUT ,WLUT 411	
	26	46410-18900	ASSY-TUBE,CLUTCH MASTER CYLINDER TO HOSE	1		RL-UTK,WRL -UTK 411	
	27	46212-10600	ASSY-HOSE,CLUTCH (L=250M/M)	1		411	
	28	46237-30000	GASKET-(CLUTCH HOSE TO OPERATING CYLINDER)	1		411	
	29	46206-61000	SPRING-LOCK,BRAKE HOSE	1		411	
	30	46205-61000	PLATE-LOCK,BRAKE HOSE	1	5	411	

REVISED: SEPTEMBER,1963

Printed in Japan

NOTE

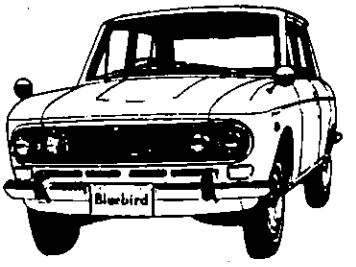

CLUTCH PEDAL & MASTER CYLINDER

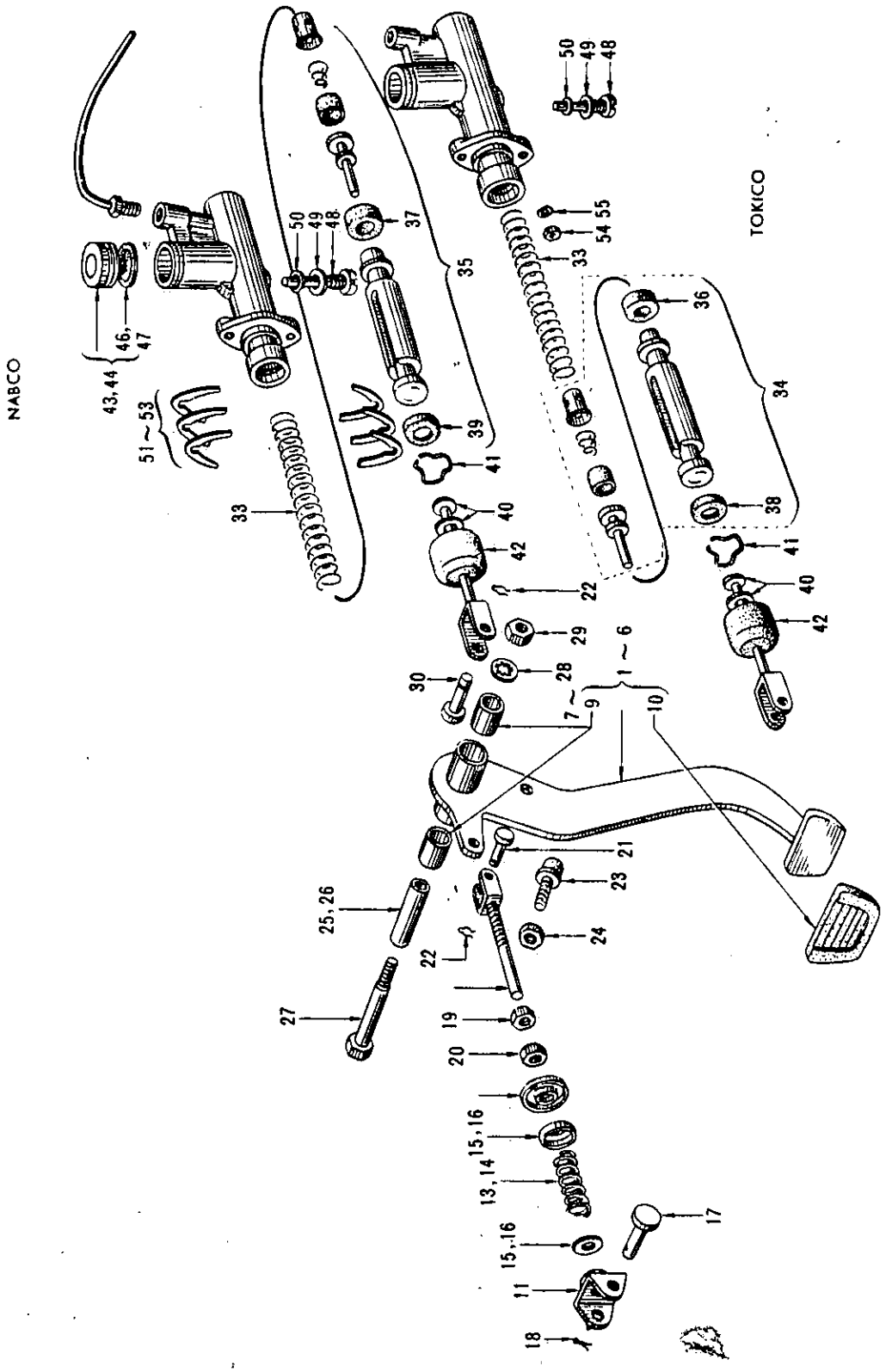

S	KEY NO.	PART NO.	PART NAME	Q'TY	SALES UNIT	MODEL	ICA
			CLUTCH PEDAL & MASTER CYLINDER				
*	1	46540-10601	ASSY-PEDAL,CLUTCH (TOC /# P411-125008 WP411-8 20009)	1	1	R DRIVE 411 (EXC, UTK,1.6L)	
	2	46540-10603	ASSY-PEDAL,CLUTCH(FROM C/# P411-125009 WP411 -820010)	1	1	R DRIVE 411 (EXC, UTK,1.6L)	N
	3	46540-15800	ASSY-PEDAL,CLUTCH (TO C/# P411-125008)	1		UTK,1.6L 411	
	4	46540-15801	ASSY-PEDAL,CLUTCH (FRO M C/# P411-125009)	1	1	UTK, 1.6L 411	N
	5	46540-10800	ASSY-PEDAL,CLUTCH(TO C /# PL411-037672,WPL411 -820201)	1	1	L DRIVE 41 1	
	6	46540-10801	ASSY-PEDAL,CLUTCH(FROM C/# PL411-037673 WPL4 11-820202)	1		L DRIVE 41 1	N
	7	46425-30000	BUSHING-PEDAL FULCRUM (TO MAR-66)	2	10	411	
	8	46425-18400	BUSHING-PEDAL FULCRUM (FROM 66-APR.)	2	10	411	Y
	9	46525-73000	BUSHING-PEDAL FULCRUM(FROM C/# P411-125009 P C411-037673 WP411-8200 10 WPL411-820202)	2	10	411	
	10	46531-10601	COVER-PEDAL PAD	1	5	411	
*	11	46577-61000	ASSY-SEAT,SPRING,FULCR UM SIDE	1	5	411	
	12	46577-16500	SEAT-SPRING,FULCRUM SI DE	1		411	Y
	13	46571-10600	SPRING-RETURN,CLUTCH P EDAL	1	5	411 (EXC UTK,1.6L)	
	14	46587-15800	SPRING-RETURN,CLUTCH P EDAL	1	5	UTK,1.6L 411	

REVISED: SEPTEMBER,1968

Printed in Japan

S	KEY NO.	PART NO.	PART NAME	Q'TY	SALES UNIT	MODEL	ICA
	15	46584-61000	SEAT-RUBBER,CLUTCH RETURN SPRING	2	5	411 (EXC, UTK,1.6L)	
	16	46488-04100	SEAT-RETURN SPRING	1	1	UTK,1.6L 411	
	17	46123-85460	PIN-CLEVIS	1	10	411	
	18	00921-22010	PIN-COTTER	1		411	
	19	00911-14510	NUT	1		411	
	20	00911-34510	NUT	1	50	411	
*	21	46123-08700	PIN-CLEVIS	1	10	411	
	22	46124-35100	SPRING-RETAINING	2	10	411	
	23	46510-08700	STOPPER-PEDAL,CLUTCH	2	5	411	
	24	00911-34510	NUT	2	50	411	
	25	46482-30000	SLEEVE-PEDAL SHAFT	1		411	
	26	46582-18400	SLEEVE-PEDAL SHAFT(FROM C/# P411-125009 PL411-037673 WP411-820010 WPL411-820202)	1	5	411	N
	27	46460-04100	PIN-FULCRUM	1	10	411	
*	28	00916-11800	WASHER	1	50	411	
	29	00911-34810	NUT	1		411	
*	30	46123-08700	PIN-CLEVIS	1	10	411	
	31	30610-10601	ASSY-CYLINDER,CLUTCH MASTER	1	10	411 (EXC, 1.6L)	
	32	30610-15800	ASSY-CYLINDER,CLUTCH MASTER	1		1.6L 411	
	33	46061-30000	SPRING-PISTON	1		411	
	34	46077-08710	ASSY-PISTON,CLUTCH MASTER (TOKICO)	1	5	411	
	35	46076-08700	ASSY-PISTON,CLUTCH MASTER (NABCO)	1		411	

Printed in Japan

REVISED: SEPTEMBER,1968

S	KEY NO.	PART NO.	PART NAME	Q'TY	SALES UNIT	MODEL	ICA
*	36	46064-30000	CUP-PISTON,PRIMARY (TOKICO)	1	10	411	
	37	46064-30002	CUP-PISTON,PRIMARY (NABCO)	1	10	411	
*	38	46065-30000	CUP-PISTON,SECONDARY (TOKICO)	1	10	411	
*	39	46065-30002	CUP-PISTON,SECONDARY (NABCO)	1	1	411	
	40	46080-10600	ASSY-ROD,PUSH	1	1	411	
	41	46070-27260	RING-SNAP	1	1	411	
	42	46100-27260	COVER-DUST	1		411	
	43	46020-10610	SET-CAP,FILLER (TOKICO)	1	5	411 (EXC. 1.6L)	
	44	46020-10600	SET-CAP,FILLER (NABCO)	1	5	411 (EXC. 1.6L)	
	45	46020-10601	ASSY-CAP,RESERVOIR	1		1.6L411	
*	46	46034-01300	GASKET-FILLER (TOKICO)	1	10	411	
	47	46034-02700	GASKET-FILLER (NABCO)	1	10	411	
	48	46032-27260	SCREW-STOPPER	1		411	
	49	46043-27260	PACKING	1	10	411	
	50	46079-27260	RING-"O"	1	1	411	
	51	30611-27260	SHIM(1.6T)FOR CLUTCH PEDAL ADJUSTMENT	AR	50	411	
	52	30612-27260	SHIM(0.8T)FOR CLUTCH PEDAL ADJUSTMENT	AR	1	411	
	53	30613-27260	SHIM(0.5T)FOR CLUTCH PEDAL ADJUSTMENT	AR	10	411	
	54	00911-14510	NUT TO FIX MASTER CYLINDER	2		411	
	55	00915-21510	WASHER-LOCK TO FIX MASTER CYLINDER	2		411	

Printed in Japan

REVISED: SEPTEMBER,1968

S	KEY NO.	PART NO.	PART NAME	QTY	SALES UNIT	MODEL	ICA
	56	30610-10625	KIT-REPAIR"A"(NABCO)(INC.26,28,30,31,35,VALVE,SPRING,SEAT)	1		411	
	57	30610-10626	KIT-REPAIR"B"(NABCO)(INC.22,24,26,28,30,31,35,36,VALVE,SPRING,SEAT)	1	10	411	
	58	30610-10627	KIT-REPAIR"A"(TOKICO)(INC.26,28,30,31,35,VALVE,SPRING,SEAT)	1	10	411	
	59	30610-10628	KIT-REPAIR"B"(TOKICO)(INC.22,24,26,28,30,31,35,36,VALVE,SPRING,SEAT)	1		411	

Printed in Japan

REVISED: SEPTEMBER, 1968

NOTE

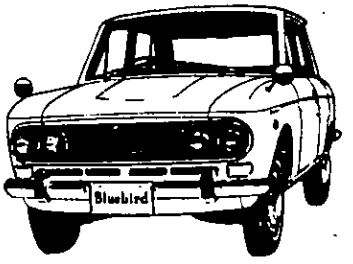

TRANSMISSION ASSEMBLIES

Note: This figure will be given later.

S	KEY NO.	PART NO.	PART NAME	Q'TY	SALES UNIT	MODEL	ICA
			TRANSMISSION ASSEMBLIES				
	1	32010-13851	ASSY-TRANSMISSION(FROM OCT.-65)	1	1	U,WU 411	
	2	32010-17050	ASSY-TRANSMISSION(SPEEDOMETER GEAR RATIO 5T:19T)	1	1	LU,WLU 411	
	3	32010-12452	ASSY-TRANSMISSION(MAIN DRIVE GEAR 21T,19/5, FOR 4.111 FINAL RATIO)	1		4 SPEED 411	
*	4	32010-12453	ASSY-TRANSMISSION(MAIN DRIVE GEAR 21T, 15/4, FOR 4.375 FINAL RATIO (DISCONTINUATION OF PRODUCTION)	1		OP.4 SPEED 411	
	5	32010-16530	ASSY-TRANSMISSION(5T:18T)	1		4 SPEED 411	
	6	32010-16531	ASSY-TRANSMISSION(5T:17T)	1	1	OP.4 SPEED 411	
	7	32010-16750	ASSY-TRANSMISSION(5T:19T)	1	1	UTK,411	
	8	32010-15852	ASSY-TRANSMISSION(5T:17T)(3.889).	1		RL-UTK,NPL-UTK 411	

REVISED: SEPTEMBER,1968

Printed in Japan

NOTE

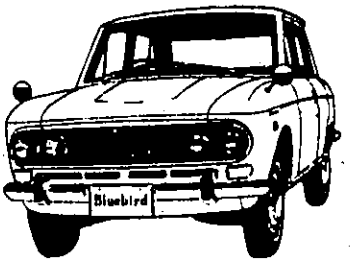

NOTE

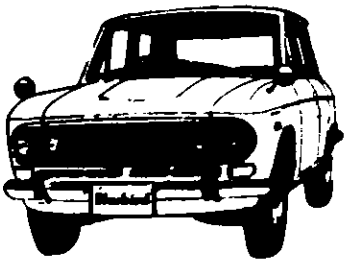

TRANSMISSION CASE (3 SPEED)

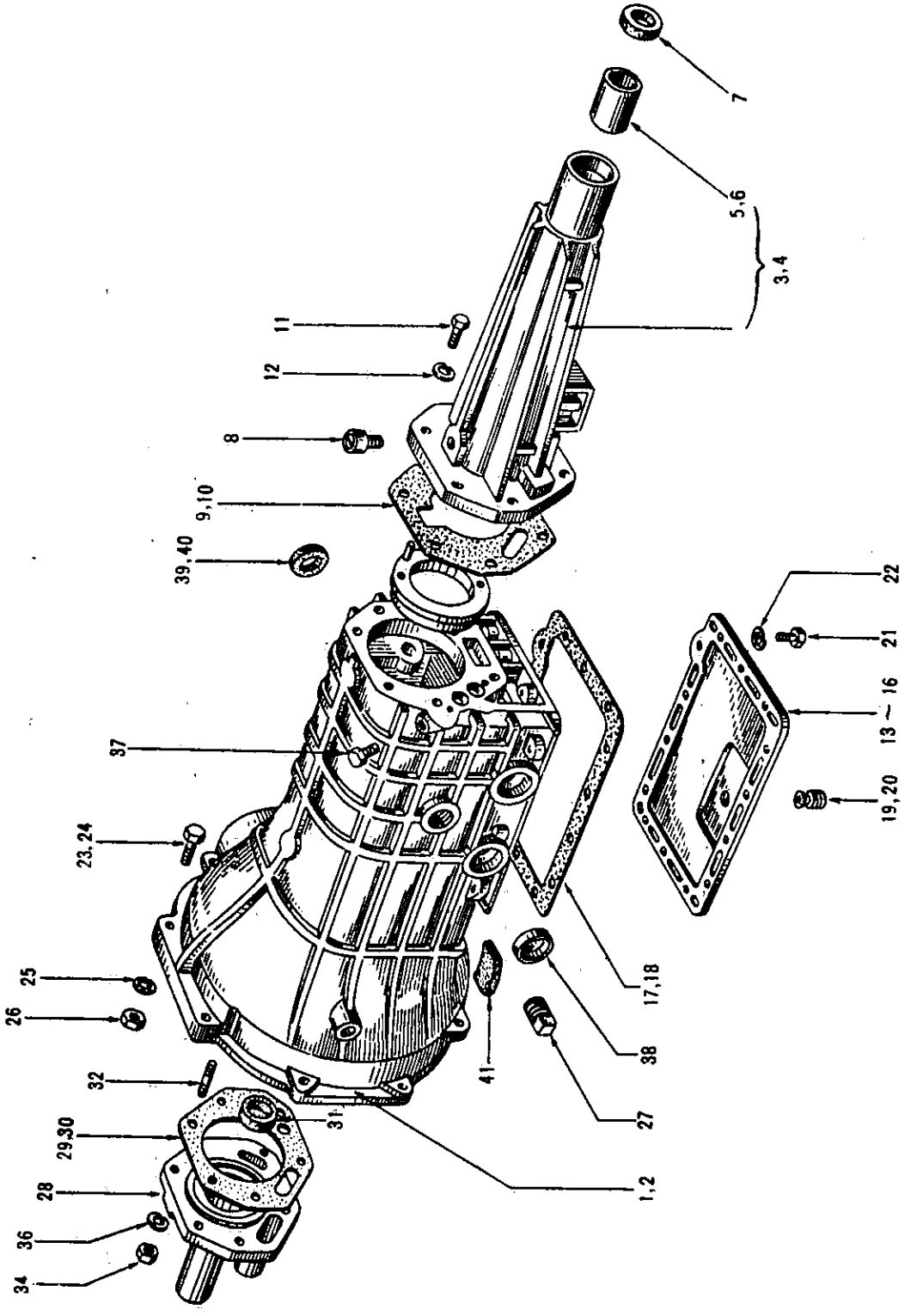

TRANSMISSION CASE (3 SPEED)

S	KEY NO.	PART NO.	PART NAME	QTY	SALES UNIT	MODEL	
*	1	32101-10601	CASE-TRANSMISSION	1		3 SPEED R DRIVE 411	
*	2	32101-10801	CASE-TRANSMISSION	1		3 SPEED L DRIVE 411	
*	3	32130-13200	ASSY-EXTENSION,REAR	1	1	3 SPEED 41 1	
	4	32130-16500	ASSY-EXTENSION,REAR	1	1	3 SPEED 41 1	Y
	5	32132-13200	BUSHING-REAR EXTENSION	1		3 SPEED 41 1	
	6	32132-16500	BUSHING-REAR EXTENSION	1	1	3 SPEED 41 1	Y
	7	32136-07200	SEAL-OIL,REAR EXTENSION	1	10	3 SPEED 41 1	
	8	38322-55100	ASSY-BREATHER	1	10	3 SPEED 41 1	
	9	32134-10600	GASKET-REAR EXTENSION	1	10	3 SPEED 41 1	
	10	32134-16500	GASKET-REAR EXTENSION	1	10	3 SPEED 41 1	Y
	11	00114-63510	BOLT TO FIX REAR EXTENSION	6	20	3 SPEED 41 1	
	12	00915-21610	WASHER-LOCK TO FIX REAR EXTENSION	6		3 SPEED 41 1	
*	13	32161-10600	COVER-BOTTOM	1		3 SPEED 41 1	
*	14	32161-16500	COVER-BOTTOM	1	1	3 SPEED 41 1	Y
*	15	32161-16501	COVER-BTTOM	1		3 SPEED 41 1	C

Printed in Japan

REVISED: SEPTEMBER,1968

S	KEY NO.	PART NO.	PART NAME	QTY	SALES UNIT	MODEL	ICA
	16	32161-16502	COVER-BOTTOM(FROM C/# P411-104779,PL411-033763)	1	1	3 SPEED 41 1	C
	17	32162-10600	GASKET-BOTTOM COVER	1	10	3 SPEED 41 1	
	18	32162-16501	GASKET-BOTTOM COVER(FROM C/# P411-104779,PL411-033763)	1		3 SPEED 41 1	C
	19	32103-36900	ASSY-PLUG,DRAIN	1		3 SPEED 41 1	
	20	32103-14600	ASSY-PLUG,DRAIN	1	5	3 SPEED 41 1	N
	21	00114-52210	BOLT TO FIX BOTTOM COVER	14		3 SPEED 41 1	
	22	00915-11510	WASHER-LOCK TO FIX BOTTOM COVER	14		3 SPEED 41 1	
	23	32012-04100	BOLT TO FIX TRANSMISSION TO ENGINE REAR PLATE	5	10	3 SPEED 41 1	
	24	00124-54040	BOLT TO FIX TRANSMISSION TO ENGINE REAR PLATE	1		3 SPEED 41 1	
	25	00915-21510	WASHER-LOCK TO FIX TRANSMISSION TO ENGINE REAR PLATE	6		3 SPEED 41 1	
	26	00911-14500	NUT TO FIX TRANSMISSION TO ENGINE REAR PLATE	6	100	3 SPEED 41 1	
	27	00931-11200	PLUG-TAPER	1	50	3 SPEED 41 1	
	28	32111-13200	COVER-FRONT,TRANSMISSION CASE	1	1	3 SPEED 41 1	
	29	32112-10600	GASKET-FRONT COVER	1	10	3 SPEED 41 1	
	30	32112-16500	GASKET-FRONT COVER	1	10	3 SPEED 41 1	Y
	31	32113-13200	SEAL-OIL,FRONT COVER	1	10	3 SPEED 41 1	

Printed in Japan

REVISED: SEPTEMBER,1968

S	KEY NO.	PART NO.	PART NAME	Q'TY	SALES UNIT	MODEL	ICA
	32	00284-52200	STUD TO FIX FRONT COVE R	6	50	3 SPEED 41 1	
	33	00114-52510	BOLT TO FIX FRONT COVE R	6	50	3 SPEED 41 1	C
	34	00911-14510	NUT TO FIX FRONT COVER	6		3 SPEED 41 1	
	35	00114-52510	BOLT TO FIX FRONT COVE R	6	50	3 SPEED 41 1	C
	36	00915-11510	WASHER-LOCK TO FIX FRO NT COVER	6		3 SPEED 41 1	
	37	32816-36900	PLUG-INTER LOCK HOLE	1		3 SPEED 41 1	
	38	32920-36900	PLUG-CROSS SHAFT	2		3 SPEED 41 1	
*	39	32884-61000	OIL SEAL-CROSS SHAFT	2	50	3 SPEED 41 1	
	40	32884-16500	OIL SEAL-CROSS SHAFT	2		3 SPEED 41 1	Y
	41	30543-13200	BOOT-RUBBER	1	10	3 SPEED 41 1	

REVISED: SEPTEMBER,1968

Printed in Japan

NOTE

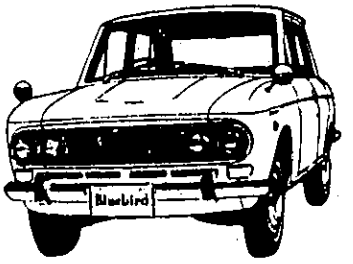

NOTE

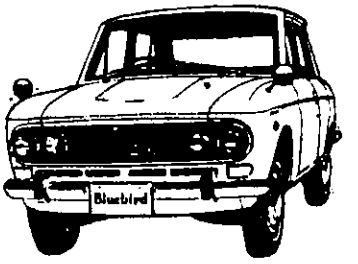

TRANSMISSION GEAR (3 SPEED)

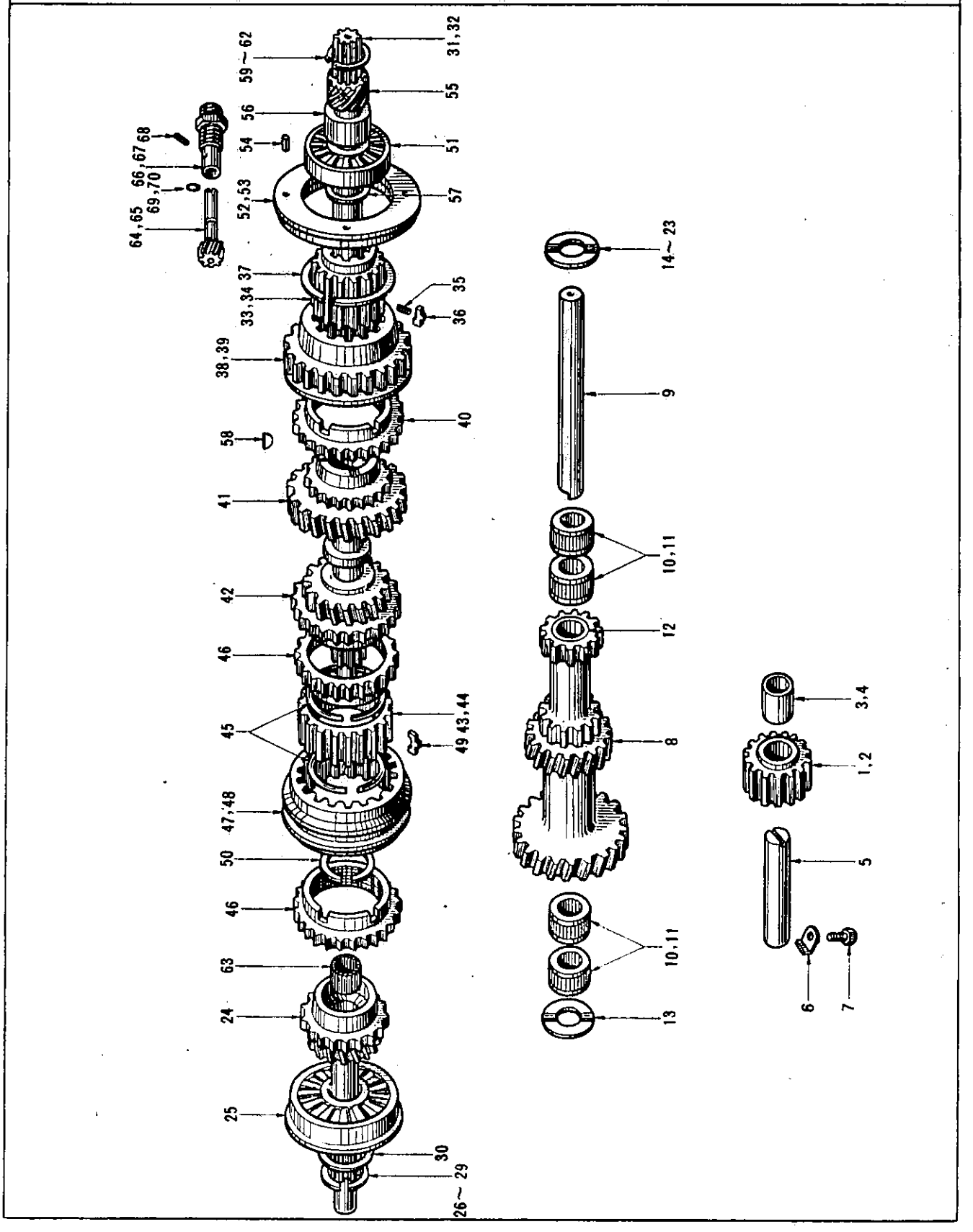

TRANSMISSION GEAR (3 SPEED)

S	KEY NO.	PART NO.	PART NAME	Q'TY	SALES UNIT	MODEL	ICA
*	1	32280-10601	ASSY-GEAR,REVERSE(16T)	1	1	3 SPEED 41 1	
	2	32280-13200	ASSY-GEAR,REVERSE(16T)	1	1	3 SPEED 41 1	Y
*	3	32283-10600	BUSHING-REVERSE GEAR	1	10	3 SPEED 41 1	
	4	32283-13200	BUSHING-REVERSE GEAR	1	10	3 SPEED 41 1	Y
	5	32281-10600	SHAFT-REVERSE IDLER	1		3 SPEED 41 1	
	6	32291-10600	WASHER-LOCK TO FIX REVERSE SHAFT	1		3 SPEED 41 1	
	7	32290-10600	SCREW-SET TO FIX REVERSE SHAFT	1	10	3 SPEED 41 1	
	8	32213-13200	GEAR-COUNTER(33T,27T,17T,16T)	1		3 SPEED 41 1	
	9	32211-10600	SHAFT-COUNTER	1	1	3 SPEED 41 1	
*	10	32219-10600	BEARING-NEEDLE	4		3 SPEED 41 1	
	11	32219-73200	BEARING-NEEDLE	2	1	3 SPEED 41 1	Y
	12	32214-10600	PIECE-DISTANCE	1	10	3 SPEED 41 1	
*	13	32224-10600	WASHER-THRUST,COUNTER,FRONT	1	10	3 SPEED 41 1	
*	14	32225-10600	WASHER-THRUST,COUNTER,REAR(4.03T)	1	10	3 SPEED 41 1	
	15	32225-18400	WASHER-THRUST,COUNTER,REAR(4.03T)	1		3 SPEED 41 1	Y

Printed in Japan

REVISED: SEPTEMBER.1968

S	KEY NO.	PART NO.	PART NAME	QTY	SALES UNIT	MODEL	ICA
	16	32226-10600	WASHER-THRUST,COUNTER, REAR(3.98T)	1	10	3 SPEED 41 1	
	17	32226-18400	WASHER-THRUST,COUNTER, REAR(3.98T)	1	10	3 SPEED 41 1	Y
	18	32227-10600	WASHER-THRUST,COUNTER, REAR(3.93T)	1	5	3 SPEED 41 1	
	19	32227-18400	WASHER-THRUST,COUNTER, REAR(3.93T)	1	10	3 SPEED 41 1	Y
	20	32228-10600	WASHER-THRUST,COUNTER, REAR(3.88T)	1	10	3 SPEED 41 1	
	21	32228-18400	WASHER-THRUST,COUNTER, REAR(3.88T)	1		3 SPEED 41 1	Y
	22	32229-10600	WASHER-THRUST,COUNTER, REAR(3.83T)	1	10	3 SPEED 41 1	
	23	32229-18400	WASHER-THRUST,COUNTER REAR(3.83T)	1	10	3 SPEED 41 1	Y
	24	32201-13200	GEAR-MAIN DRIVE(17T,36 T)	1		3 SPEED 41 1	
	25	32203-10600	BEARING-MAIN DRIVE GEA R	1		3 SPEED 41 1	
	26	32204-08001	RING-SNAP,MAIN DRIVE G EAR(1.61T)	1	5	3 SPEED 41 1	
	27	32204-08002	RING-SNAP,MAIN DRIVE G EAR(1.64T)	1	5	3 SPEED 41 1	
	28	32204-08003	RING-SNAP,MAIN DRIVE G EAR(1.74T)	1	5	3 SPEED 41 1	
	29	32204-08004	RING-SNAP,MAIN DRIVE G EAR(1.77T)	1		3 SPEED 41 1	
	30	32209-08002	SPACER-MAIN DRIVE GEAR (1.6T)	1	10	3 SPEED 41 1	
	31	32241-13200	SHAFT-MAIN(TO SEP-65)	1	1	3 SPEED 41 1	
	32	32241-16500	SHAFT-MAIN(FROM OCT.-6 5)	1	1	3 SPEED 41 1	N

Printed in Japan

REVISED: SEPTEMBER,1968

S	KEY NO.	PART NO.	PART NAME	Q'TY	SALES UNIT	MODEL	ICA
	33	32601-13200	HUB-SNYCHRONIZER,1ST(TO SEP-65)	1	1	3 SPEED 41 1	
	34	32601-16500	HUB-SNYCHRONIZER,1ST & REVERSE(FROM OCT-65)	1	1	3 SPEED 41 1	N
	35	32602-32200	SPRING-SYNCHRONIZER	3	10	3 SPEED 41 1	
	36	32608-36900	INSERT-SHIFTING,1ST SPEED	3		3 SPEED 41 1	
	37	32234-36900	RING-SNAP,SHIFTING INSERT	1	50	3 SPEED 41 1	
	38	32243-13200	GEAR-REVERSE,MAIN SHAFT(34T)(TOSEP-65)	1	1	3 SPEED 41 1	
	39	32243-16500	GEAR-REVERSE,MAIN SHAFT(34T)(FROM OCT.-65)	1		3 SPEED 41 1	N
*	40	32604-61000	RING-BAULK,1ST SPEED	1	1	3 SPEED 41 1	
	41	32251-13200	GEAR-1ST SPEED,MAIN SHAFT(17T)	1	1	3 SPEED 41 1	
	42	32261-13200	GEAR-2ND SPEED(24T)	1	1	3 SPEED 41 1	
	43	32605-13200	HUB-SYNCHRONIZER(TO SEP-65)	1	1	3 SPEED 41 1	
	44	32605-16500	HUB-SYNCHRONIZER(FROM OCT.-65)	1		3 SPEED 41 1	N
	45	32683-36900	SPRING-SYNCHRONIZER,2ND & 3RD	2	10	3 SPEED 41 1	
*	46	32604-61000	RING-BAULK	2	1	3 SPEED 41 1	
	47	32606-13200	SLEEVE-COUPLING(TO SEP-65)	1	1	3 SPEED 41 1	
	48	32606-61000	SLEEVE-COUPLING(FROM OCT-65)	1		3 SPEED 41 1	N
	49	32609-36900	INSERT-SHIFTING,2ND & 3RD	3		3 SPEED 41 1	

Printed in Japan

REVISED: SEPTEMBER,1968

S	KEY NO.	PART NO.	PART NAME	Q'TY	SALES UNIT	MODEL	ICA
	50	32263-36900	RING-SNAP,SYNCHRONIZER HUB	1	10	3 SPEED 41 1	
	51	32273-36900	BEARING-MAIN SHAFT	1	1	3 SPEED 41 1	
*	52	32120-10600	ASSY-RETAINER,BEARING(TO SEP-65)	1	1	3 SPEED 41 1	
	53	32120-16500	ASSY-RETAINER,BEARING(FROM 65-OCT.)	1		3 SPEED 41 1	N
	54	00124-26760	PEG-LOCATING	1		3 SPEED 41 1	
	55	32701-10800	GEAR-DRIVING,SPEEDOMETER(5T)	1	1	3 SPEED 41 1	
	56	32128-07200	PIECE-DISTANCE	1	1	3 SPEED 41 1	
	57	32274-10600	SPACER-BEARING	1		3 SPEED 41 1	
	58	00927-21300	KEY-WOODRUFF	1	100	3 SPEED 41 1	
	59	32708-10600	RING-SNAP(1.30T)USE,FIT ONE	1	10	3 SPEED 41 1	
	60	32708-10601	RING-SNAP(1.45T)USE,FIT ONE	1	10	3 SPEED 41 1	
	61	32708-10602	RING-SNAP(1.55T)USE,FIT ONE	1	10	3 SPEED 41 1	
	62	32708-10603	RING-SNAP(1.65T)USE,FIT ONE	1	10	3 SPEED 41 1	
	63	32272-36900	BEARING-NEEDLE,PILOT	1	1	3 SPEED 41 1	
*	64	32703-16500	ASSY-PINION,SPEEDOMETER(19T)	1	1	3 SPEED 41 1	
	65	32703-14615	ASSY-PINION,SPEEDOMETER(17T)	1	1	3 SPEED 41 1	

Printed in Japan

REVISED: SEPTEMBER,1968

S	KEY NO.	PART NO.	PART NAME	Q'TY	SALES UNIT	MODEL	ICA
	66	32707-36900	ASSY-SLEEVE,SPEEDOMETER PINION(TO C/# P411-125372 PL411-038497 WP411-817589 WPL411-813659)	1		3 SPEED 411	
	67	32707-18400	ASSY-SLEEVE,SPEEDOMETER PINION FROM C/# P411-125373 PL411-038498 WP411-817590 WPL411-813660	1	5	3 SPEED 411	Y
	68	32712-61000	PIN-ROLLER	1		3 SPEED 411	
	69	32709-04100	O-RING(TO C/# P411-125372 PL411-038497 WP411-817589 WPL411-813659)	1	10	3 SPEED 411	
	70	32709-14600	O-RING(FROM C/# P411-125373 PL411-038498 WP411-917590 WPL411-813660)	1	10	3 SPEED 411	N

Printed in Japan

REVISED: SEPTEMBER,1968

NOTE

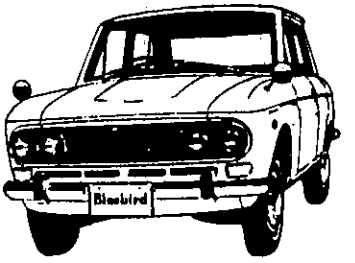

NOTE

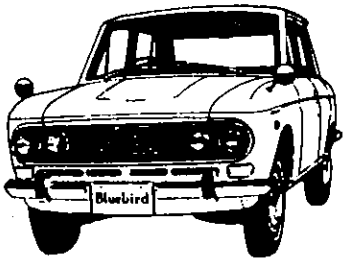

TRANSMISSION FORK & ROD (3 SPEED)

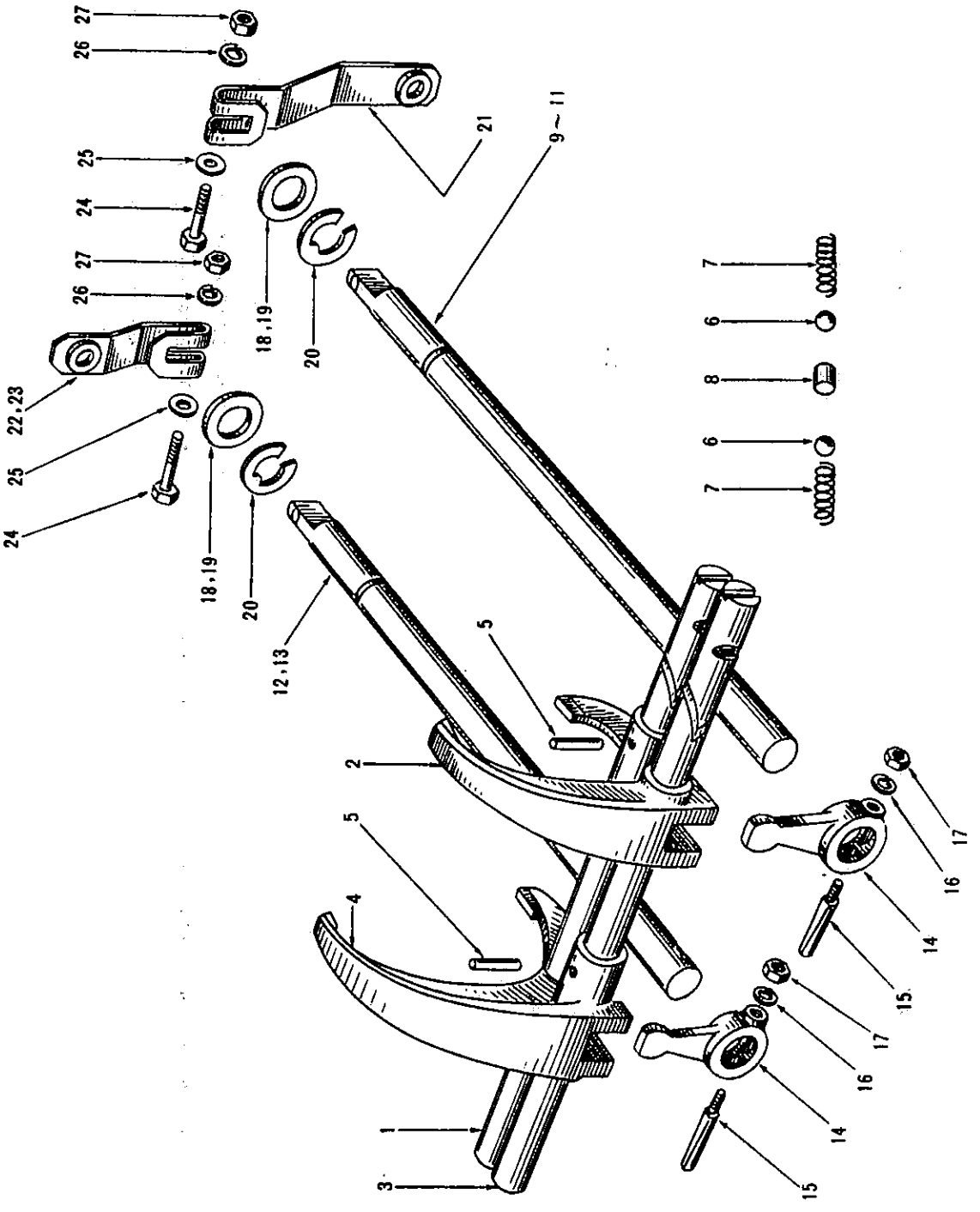

S	KEY NO.	PART NO.	PART NAME	QTY	SALES UNIT	MODEL	ICA
			TRANSMISSION FORK & ROD (3 SPEED)				
	1	32801-10600	ROD-FORK,1ST & REVERSE	1	1	3 SPEED 411	
	2	32805-13200	FORK-1ST & REVERSE	1	1	3 SPEED 411	
	3	32809-10600	ROD-FORK,2ND & 3RD	1	1	3 SPEED 411	
	4	32811-13200	FORK-2ND & 3RD	1	1	3 SPEED 411	
	5	32292-36900	PIN-RETAINING,FORK TO ROD	2	10	3 SPEED 411	
	6	32829-26760	BALL-CHECKING	2	10	3 SPEED 411	
	7	32831-00100	SPRING-CHECKING BALL	2		3 SPEED 411	
	8	32815-36900	PLUNGER-INTER LOCK	1	10	3 SPEED 411	
	9	32911-10601	SHAFT-CROSS,1ST & REVERSE(TO SEP-65)	1	1	R DRIVE(3 SPEED)411	
	10	32910-16500	SHAFT-CROSS,1ST & REVERSE(FROM 65-OCT.)	1	1	R DRIVE(3 SPEED)411	Y
	11	32911-10801	SHAFT-CROSS,1ST & REVERSE	1	1	L DRIVE(3 SPEED)411	
	12	32881-10601	SHAFT-CROSS,2ND & 3RD	1		R DRIVE(3 SPEED)411	
	13	32881-10801	SHAFT-CROSS,2ND & 3RD	1		L DRIVE(3 SPEED)411	
	14	32912-10600	LEVER-OPERATING	2	1	3 SPEED 411	
	15	32917-36900	PIN-LOCK,OPERATING LEVER TO SHAFT	2	10	3 SPEED 411	

Printed in Japan

REVISED: SEPTEMBER,1968

S	KEY NO.	PART NO.	PART NAME	QTY	SALES UNIT	MODEL	ICA
*	16	00915-11400	WASHER-LOCK	2	50	3 SPEED 411	
*	17	00911-14400	NUT	2	100	3 SPEED 411	
*	18	32921-36900	WASHER-THRUST	2	10	3 SPEED 411	
	19	32921-16500	WASHER-THRUST	2	10	3 SPEED 411	
	20	32924-36900	RING-RETAINING,CROSS SHAFT	2	5	3 SPEED 411	
	21	32922-10601	LEVER-CHANGE,1ST & 2ND (UP TO 65-SEPT.)	1	1	3 SPEED 411	
	22	32923-10602	LEVER-CHANGE,2ND & 3RD (FROM 65-OCT.)	1		R DRIVE(3 SPEED)411	
	23	32923-10802	LEVER-CHANGE,2ND & 3RD	1	2	L DRIVE(3 SPEED)411	
	24	32952-08000	BOLT	2	10	3 SPEED 411	
	25	00915-41510	WASHER-PLAIN TO FIX CHANGE LEVER	4		3 SPEED 411	
	26	00915-11510	WASHER-LOCK TO FIX CHANGE LEVER	2		3 SPEED 411	
	27	00911-24510	NUT TO FIX CHANGE LEVER	2	100	3 SPEED 411	

Printed in Japan

REVISED: SEPTEMBER,1968

NOTE

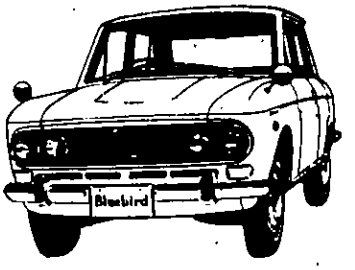

TRANSMISSION CASE (4 SPEED) (TO SEP-65)

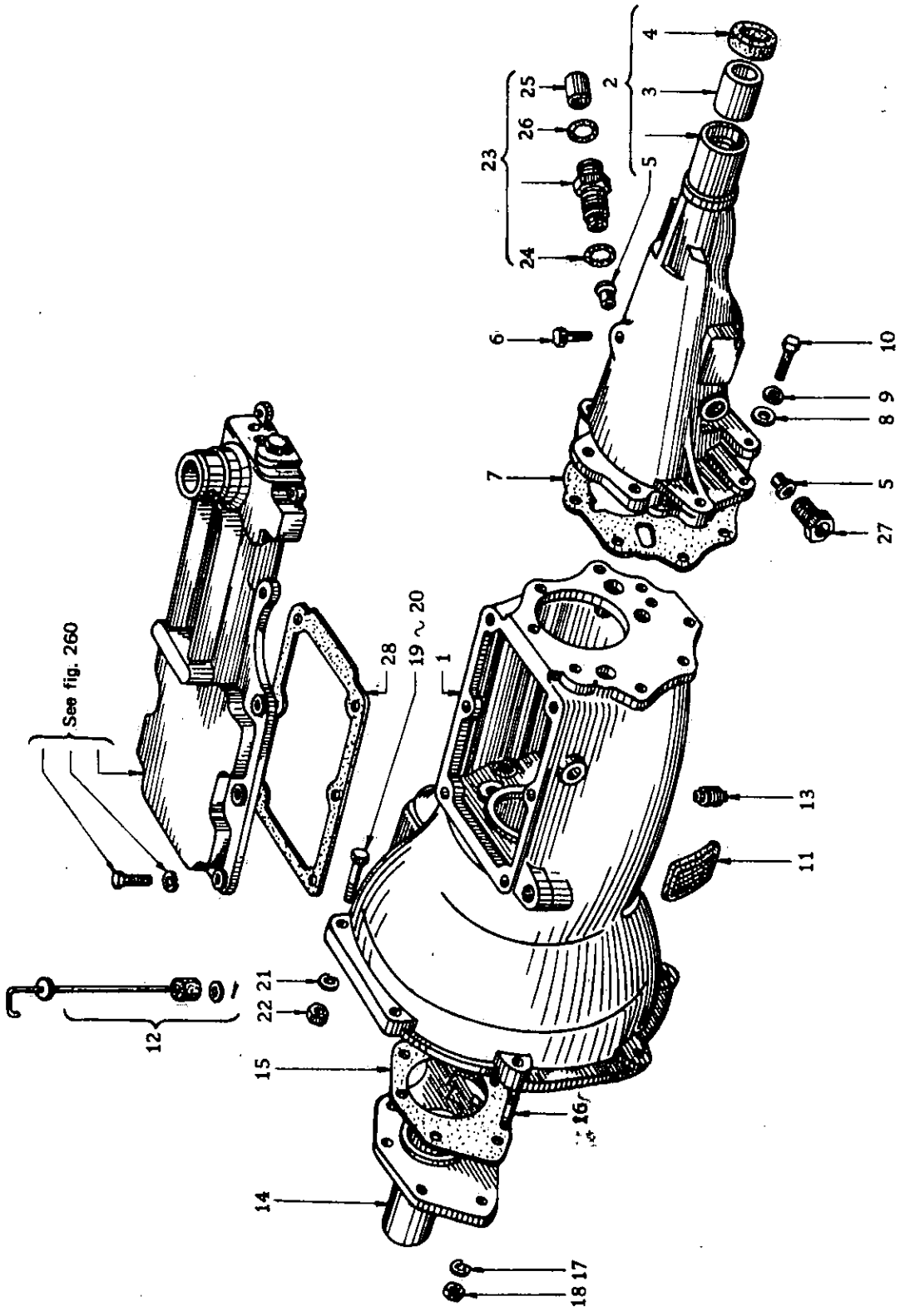

TRANSMISSION CASE (4 SPEED) (TO SEP-65)

S	KEY NO.	PART NO.	PART NAME	QTY	SALES UNIT	MODEL	ICA
	1	32101-09602	CASE-TRANSMISSION	1		4 SPEED 41 1	
	2	32130-08000	ASSY-EXTENSION,REAR	1		4 SPEED 41 1	
*	3	32132-07200	BUSHING-REAR EXTENSION	1	2	4 SPEED 41 1	
	4	32136-07200	SEAL-OIL,REAR EXTENSION	1	10	4 SPEED 41 1	
	5	32706-26760	BUSHING-SPEEDOMETER PINION	2		4 SPEED 41 1	
	6	38322-55100	ASSY-BREATHER	1	10	4 SPEED 41 1	
	7	32134-01300	GASKET-REAR EXTENSION	1	50	4 SPEED 41 1	
	8	32137-08000	WASHER TO FIX REAR EXTENSION	8	1	4 SPEED 41 1	
	9	32138-08000	WASHER TO FIX REAR EXTENSION	8		4 SPEED 41 1	
	10	32135-08001	BOLT TO FIX REAR EXTENSION	8		4 SPEED 41 1	
	11	30543-01301	BOOT-RUBBER	1	5	4 SPEED 41 1	
*	12	32150-01300	ASSY-STICK,OIL LEVEL DIP	1	1	4 SPEED 41 1	
*	13	32103-04100	ASSY-PLUG,DRAIN	1	10	4 SPEED 41 1	
	14	32111-09600	COVER-FRONT,TRANSMISSION CASE	1	1	4 SPEED 41 1	
	15	32112-30800	GASKET-FRONT COVER	1	10	4 SPEED 41 1	

Printed in Japan

REVISED: SEPTEMBER,1968

S	KEY NO.	PART NO.	PART NAME	Q'TY	SALES UNIT	MODEL	ICA
	16	32114-00100	STUD TO FIX FRONT COVE R	7	10	4 SPEED 41 1	
	17	00915-11510	WASHER-LOCK TO FIX FRO NT COVER	7		4 SPEED 41 1	
	18	00911-14510	NUT TO FIX FRONT COVER	7		4 SPEED 41 1	
	19	00124-53510	BOLT TO FIX TRANSMISSI ON CASE	1	50	4 SPEED 41 1	
	20	32012-04100	BOLT TO FIX TRANSMISSI ON CASE	5	10	4 SPEED 41 1	
*	21	00915-21500	WASHER-LOCK TO FIX TRA NSMISSION CASE	6	50	4 SPEED 41 1	
	22	00911-14510	NUT TO FIX TRANSMISSIO N CASE	6		4 SPEED 41 1	
	23	32707-04100	ASSY-SLEEVE,SPEEDOMETE R PINION	1	10	4 SPEED 41 1	
	24	32709-04100	RING-"O",SPEEDOMETER P INION	1	10	4 SPEED 41 1	
	25	32717-04100	RETAINER-"O" RING	1	10	4 SPEED 41 1	
	26	32710-04100	RING-"O",PINION SLEEVE	1	10	4 SPEED 41 1	
	27	32718-04103	PLUG-SPEEDOMETER PINIO N	1	10	4 SPEED 41 1	
	28	32169-12400	GASKET-COVER,TRANSMISS ION CASE	1	10	4 SPEED 41 1	

Printed in Japan

REVISED: SEPTEMBER,1968

NOTE

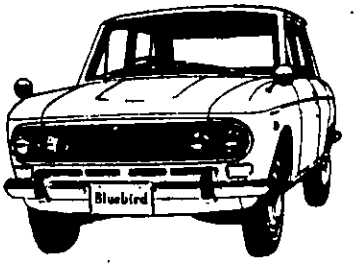

TRANSMISSION CASE (4 SPEED) (FROM OCT-65)

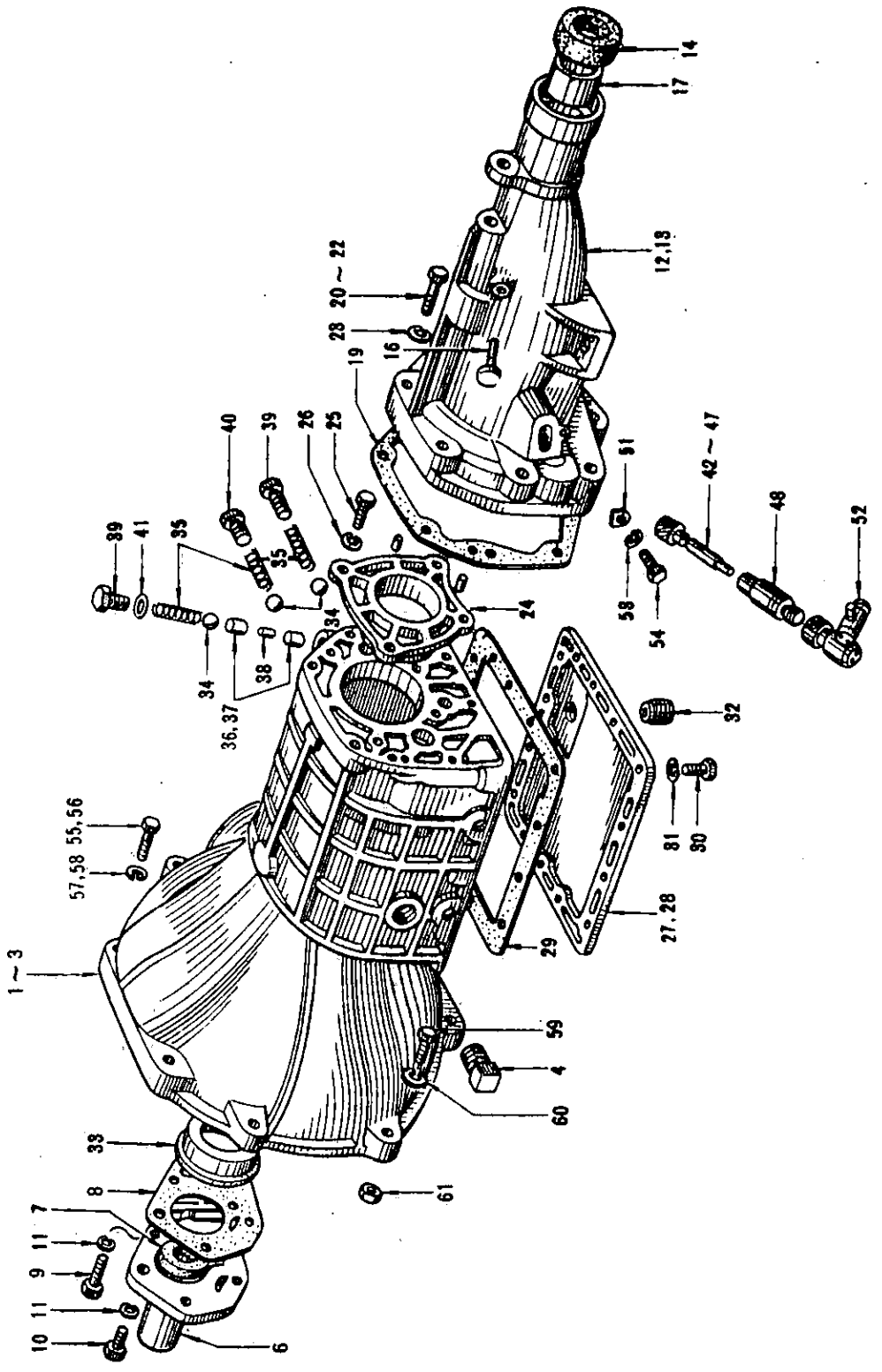

TRANSMISSION CASE (4 SPEED) (FROM OCT-65)

S	KEY NO.	PART NO.	PART NAME	QTY	SALES UNIT	MODEL	ICA
*	1	32100-16510	COMP.-CASE,TRANSMISSION	1	1	4 SPEED 411 (EXC. RL-UTK,WRL-UTK)	
*	2	32100-19100	COMP.-CASE,TRANSMISSION	1		4 SPEED 411 (EXC. RL-UTK,WRL-UTK)	Y
*	3	32101-14601	COMP.-CASE,TRANSMISSION	1	1	RL-UTK,WRL-UTK 411	
*	4	00931-11200	PLUG-TAPER THREAD	1	50	4 SPEED 411	
	5	32283-14601	BEARING-NEEDLE	2	10	4 SPEED 411	
	6	32110-14601	COVER-FRONT,TRANSMISSION CASE	1	1	4 SPEED 411	
	7	32113-~~14601~~ N2101	SEAL-OIL,FRONT COVER(50)	1	10	4 SPEED 411	
*	8	32112-~~14600~~ 14910	GASKET-FRONT COVER	1	10	4 SPEED 411	
	9	00114-53510	BOLT TO FIX FRONT COVER	2	50	4 SPEED 411	
	10	00114-52210	BOLT TO FIX FRONT COVER	3		4 SPEED 411	
*	11	00915-11500	WASHER-SPRING TO FIX FRONT COVER	5	50	4 SPEED 411	
*	12	32130-16510	ASSY-EXTENSION,REAR	1	1	4 SPEED 411	
	13	32130-18800	ASSY-EXTENSION,REAR FROM C/# SEE FIG 256	1	1	4 SPEED 411	N
	14	32136-07200	SEAL-OIL,REAR EXTENSION	1	10	4 SPEED 411	

REVISED: SEPTEMBER,1968

Printed in Japan

S	KEY NO.	PART NO.	PART NAME	Q'TY	SALES UNIT	MODEL	ICA
	15	32132-14601	BUSH-REAR EXTENSION	1	1	4 SPEED 411	
	16	38322-14601	ASSY-BREATHER,REAR EXTENSION	1	10	4 SPEED 411	
	17	32887-14600	BUSH-STRIKING ROD	1	10	4 SPEED 411	
	18	32133-14600	PIN-DOWEL,REAR EXTENSION	1	10	4 SPEED 411	
*	19	32134-14600	GASKET-REAR EXTENSION	1	10	4 SPEED 411	
	20	00114-53010	BOLT TO FIX REAR EXTENSION	4	50	4 SPEED 411 (EXC. RL-UTK,WRL-UTK)	
	21	00114-53210	BOLT TO FIX REAR EXTENSION	1	50	RL-UTK,WRL-UTK 411	
	22	00114-54510	BOLT TO FIX REAR EXTENSION	4		4 SPEED 411	
	23	00915-11510	WASHER-SPRING TO FIX REAR EXTENSION	8		4 SPEED 411	
*	24	32138-14600	RETAINER-BEARING,MAIN SHAFT	1		4 SPEED 411	
	25	00114-52510	BOLT TO FIX BEARING RETAINER	4	50	4 SPEED 411	
	26	00915-11510	WASHER-SPRING TO FIX BEARING RETAINER	4		4 SPEED 411	
*	27	32161-14600	COVER-BOTTOM,TRANSMISSION CASE	1	1	4 SPEED 411 (EXC. RL-UTK,WRL-UTK)	
*	28	32161-73200	COVER-BOTTOM,TRANSMISSION CASE	1	1	RL-UTK,WRL-UTK 411	
*	29	32162-14600	GASKET-BOTTOM COVER	1	10	4 SPEED 411	
	30	00114-52510	BOLT TO FIX BOTTOM COVER	14	50	4 SPEED 411	

Printed in Japan

REVISED: SEPTEMBER,1968

S	KEY NO.	PART NO.	PART NAME	Q'TY	SALES UNIT	MODEL	ICA
	31	00915-11510	WASHER-SPRING TO FIX B OTTOM COVER	14		4 SPEED 411	
	32	32103-14600	ASSY-PLUG,DRAIN	1	5	4 SPEED 411	
	33	32208-14600	RETAINER-BEARING,MAIN DRIVE	1	1	4 SPEED 411	
	34	32829-26760	BALL-CHECKING	3	10	4 SPEED 411	
	35	32831-00100	SPRING-CHECKING BALL	3		4 SPEED 411	
*	36	32832-14600	PLUNGER-INTER LOCK	2	10	4 SPEED 411 (EXC. RL-UTK,WPL -UTK)	
	37	32815-36900	PL UNGER-INTER LOCK	2		RL-UTK,WRL -UTK 411	
	38	32833-14600	PIN-INTER LOCK	1		4 SPEED 411	
	39	32834-14600	PLUG-CHECKING BALL	2	10	4 SPEED 411	
	40	32835-14600	PLUG-CHECKING BALL	1	10	4 SPEED 411	
	41	32836-14600	WASHER-PLAIN	3	10	4 SPEED 411	
*	42	32703-14915	ASSY-PINION,SPEEDOMETE R (19T)	1	1	UTK 411	
	43	37203-14916	ASSY-PINION,SPEEDOMETE R (19T)	1		UTK 411	Y
*	44	32703-14815	ASSY-PINION,SPEEDOMETE R(20T)	1	1	OP.UTK 411	
	45	32703-14816	ASSY-PINION,SPEEDOMETE R(20T)	1		OP.UTK 411	Y
	46	32703-14615	ASSY-PINION,SPEEDOMETE R(17T)	1	1	RL-UTK,WRL -UTK 411	
	47	32703-16515	ASSY-PINION,SPEEDOMETE R(18T)	1		4 SPEED 411	

Printed in Japan

REVISED: SEPTEMBER,1968

S	KEY NO.	PART NO.	PART NAME	Q'TY	SALES UNIT	MODEL	ICA
	48	32707-14600	ASSY-SLEEVE,SPEEDOMETER PINION	1	1	4 SPEED 411	
	49	32873-14600	PIN-RETAINING	1		4 SPEED 411	
	50	32710-14600	RING-"O",PINION SLEEVE	1	10	4 SPEED 411	
	51	32718-14600	PLATE-LOCK,SPEEDOMETER SLEEVE	1		4 SPEED 411	
○	52	32730-71802	ADAPTER-SPEEDOMETER PINION	1		4 SPEED 411	
●	53	00915-11400	WASHER-SPRING	1	50	4 SPEED 411	
	54	00114-41610	BOLT	1		4 SPEED 411	
	55	00131-66010	BOLT(TO E/# R-40000) TO FIX TRANSMISSION	4	25	4 SPEED 411	
	56	08131-06010	BOLT(FROM E/# R-40001) TO FIX TRANSMISSION	4	50	1.6L 411	N
	57	00915-21610	WASHER-SPRING(TO E/# R-40000)TO FIX TRANSMISSION	4		4 SPEED 411	
	58	08915-24010	WASHER-SPRING(FROM E/# R-40001)TO FIX TRANSMISSION	4	50	1.6L 411	N
	59	00111-52510	BOLT TO FIX TRANSMISSION	2	50	4 SPEED 411	
	60	00915-11910	WASHER-SPRING TO FIX TRANSMISSION	2		4 SPEED 411	
	61	00911-11510	NUT TO FIX TRANSMISSION	2		4 SPEED 411	
	62	30543-13200	BOOT-RUBBER,TRANSMISSION CASE	1	10	4 SPEED 411	
○	63	32120-00100	ASSY-RETAINER,BEARING MAIN SHAFT	1	1	4 SPEED(OP,WAGON)411	
	64	32120-12600	ASSY-RETAINER,BEARING MAIN SHAFT	1	1	4 SPEED(OP,WAGON)411	C

Printed in Japan

REVISED: SEPTEMBER,1968

S	KEY NO.	PART NO.	PART NAME	Q'TY	SALES UNIT	MODEL	ICA
*	65	32120-09400	ASSY-RETAINER,BEARING MAIN SHAFT	1		4 SPEED(OP .WAGON)411	
	66	32120-12600	ASSY-RETAINER,BEARING MAIN SHAFT	1	1	4 SPEED(OP .WAGON)411	C

REVISED: SEPTEMBER,1968

Printed in Japan

NOTE

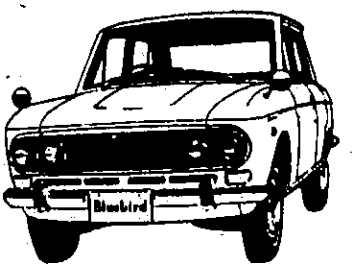

NOTE

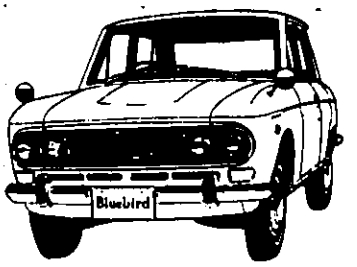

TRANSMISSION GEAR (4 SPEED) (TO SEP-65)

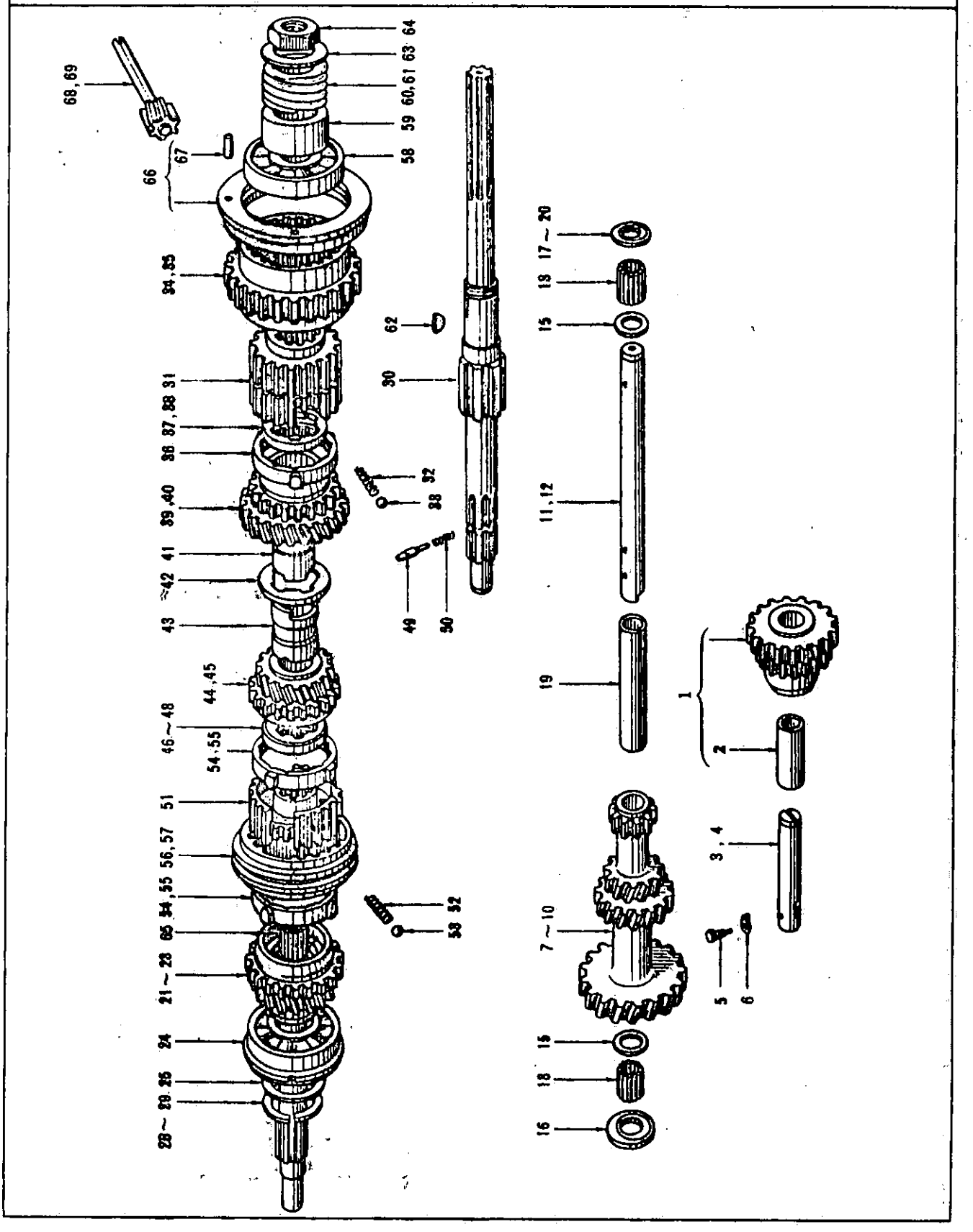

TRANSMISSION GEAR (4 SPEED) (TO SEP-65)

S	KEY NO.	PART NO.	PART NAME	QTY	SALES UNIT	MODEL	ICA
	1	32280-27160	ASSY-GEAR,REVERSE(17T)	1	1	4 SPEED 411	
	2	32283-00100	BUSHING-REVERSE GEAR	1	10	4 SPEED 411	
*	3	32281-27160	SHAFT-REVERSE GEAR(TO AUG-64)	1	1	4 SPEED 411	
	4	32281-09500	SHAFT-REVERSE GEAR(FROM SEP-64)	1	5	4 SPEED 411	Y
	5	32290-10600	SCREW-SET TO FIX REVERSE SHAFT	1	10	4 SPEED 411	
*	6	32291-09500	WASHER-LOCK TO FIX REVERSE SHAFT	1	10	4 SPEED 411	
*	7	32213-27160	GEAR-COUNTER(31T,26T,20T,11T)(TO AUG-64)	1	1	4 SPEED 411	
	8	32213-32200	GEAR-COUNTER(31T,26T,20T,11T)(FROM SEPT.-64)	1	1	4 SPEED 411	Y
*	9	32213-12200	GEAR-COUNTER(29T,26T,20T,11T)(TO AUG-64)	1	1	OP.4 SPEED 411	
	10	32213-12201	GEAR-COUNTER(29T,26T,20T,11T)(FROM SEPT.-64)	1		OP.4 SPEED 411	Y
*	11	32211-27161	SHAFT-COUNTER(TO AUG-64)	1	1	4 SPEED 411	
	12	32211-07200	SHAFT-COUNTER(FROM SEPT.-64)	1		4 SPEED 411	Y
	13	32219-26760	ROLLER-NEEDLE	40	1	4 SPEED 411	
	14	32214-26760	PIECE-DISTANCE	1	10	4 SPEED 411	
	15	32218-26760	RING-RETAINER,NEEDLE ROLLER	2	5	4 SPEED 411	

Printed in Japan

REVISED: SEPTEMBER,1968

S	KEY NO.	PART NO.	PART NAME	QTY	SALES UNIT	MODEL	ICA
	16	32224-26760	WASHER-THRUST,COUNTER FRONT	1	10	4 SPEED 411	
	17	32226-26760	WASHER-THRUST,COUNTER, REAR(3.9T)	1		4 SPEED 411	
	18	32227-26760	WASHER-THRUST,COUNTER, REAR(4.0T)	1	10	4 SPEED 411	
	19	32228-26760	WASHER-THRUST,COUNTER, REAR(4.1T)	1	10	4 SPEED 411	
	20	32229-26760	WASHER-THRUST,COUNTER, REAR(4.2T)	1	1	4 SPEED 411	
	21	32201-09601	GEAR-MAIN DRIVE(20T)	1		4 SPEED 411	
*	22	32201-12400	GEAR-MAIN DRIVE(21T)	1	1	OP.4 SPEED 411	
	23	32201-12401	GEAR-MAIN DRIVE(21T)	1	1	OP.4 SPEED 411	Y
	24	32203-26760	BEARING-MAIN DRIVE GEAR	1	10	4 SPEED 411	
	25	32205-08002	SPACER-BEARING(1.6T)	1	10	4 SPEED 411	
	26	32204-08001	RING-SNAP,MAIN DRIVE GEAR(1.61T)	1	5	4 SPEED 411	
	27	32204-08002	RING-SNAP,MAIN DRIVE GEAR(1.65T)	1	5	4 SPEED 411	
	28	32204-08003	RING-SNAP,MAIN DRIVE GEAR(1.74T)	1	5	4 SPEED 411	
	29	32204-08004	RING-SNAP,MAIN DRIVE GEAR(1.77T)	1		4 SPEED 411	
*	30	32241-07200	SHAFT,MAIN	1		4 SPEED 411	
	31	32601-02700	HUB-SYNCHRONIZER	1	1	4 SPEED 411	
	32	32602-26760	SPRING-SYNCHRONIZER HUB	6	50	4 SPEED 411	

Printed in Japan

REVISED: SEPTEMBER,1968

S	KEY NO.	PART NO.	PART NAME	Q'TY	SALES UNIT	MODEL	ICA
	33	32603-26760	BALL-SYNCHRONIZER HUB	6	10	4 SPEED 41 1	
*	34	32243-26760	GEAR-MAIN SHAFT(28T)(TO AUG-64)	1		4 SPEED 41 1	
	35	32243-07200	GEAR-MAIN SHAFT(28T)(FROM SEP-64)	1		4 SPEED 41 1	Y
*	36	32604-02701	RING-BAULK,2ND SPEED	1		4 SPEED 41 1	
	37	32246-26760	WASHER-THRUST,MAIN SHAFT REAR(TO AUG-64)	1		4 SPEED 41 1	
	38	32246-32200	WASHER-THRUST,MAIN SHAFT REAR(FROM SEPT.-64)	1	5	4 SPEED 41 1	Y
*	39	32251-26761	GEAR-2ND SPEED(31T)	1		4 SPEED 41 1	
	40	32251-07200	GEAR-2ND SPEED(31T,27T)	1		4 SPEED 41 1	Y
	41	32252-26761	BUSHING-2ND SPEED GEAR	1	5	4 SPEED 41 1	
	42	32253-26760	WASHER-THRUST,MAIN SHAFT	1		4 SPEED 41 1	
	43	32262-26761	BUSHING-3RD SPEED GEAR	1	5	4 SPEED 41 1	
*	44	32261-27161	GEAR-3RD SPEED(25T)	1		4 SPEED 41 1	
	45	32261-09600	GEAR-3RD SPEED(31T,27T)	1		4 SPEED 41 1	Y
*	46	32264-26761	WASHER-THRUST,MAIN SHAFT,FRONT(3.9T)	1		4 SPEED 41 1	
*	47	32265-26761	WASHER-THRUST,MAIN SHAFT,FRONT(4.0T)	1	5	4 SPEED 41 1	
*	48	32266-26761	WASHER-THRUST,MAIN SHAFT,FRONT(4.1T)	1	5	4 SPEED 41 1	
	49	32247-26760	PEG-LOCKING	1	10	4 SPEED 41 1	

Printed in Japan

REVISED: SEPTEMBER,1968

S	KEY NO.	PART NO.	PART NAME	Q'TY	SALES UNIT	MODEL	ICA
	50	32248-26760	SPRING-LOCKING,PEG	1	1	4 SPEED 41 1	
	51	32605-02700	HUB-SYNCHRONIZER,3RD & 4TH SPEED	1		4 SPEED 41 1	
	52	32602-26760	SPRING-SYNCHRONIZER HUB	3	50	4 SPEED 41 1	
	53	32603-26760	BALL-SYNCHRONIZER HUB	6	10	4 SPEED 41 1	
*	54	32607-02701	RING-BAULK,3RD & 4TH SPEED	2	5	4 SPEED 41 1	
	55	32607-10600	RING-BAULK,3RD & 4TH SPEED	2		4 SPEED 41 1	Y
	56	32606-02700	SLEEVE-SYNCHRONIZER,3RD & 4TH SPEED	1		4 SPEED 41 1	
	57	32606-10600	SLEEVE-SYNCHRONIZER,3RD & 4TH SPEED	1		4 SPEED 41 1	Y
	58	32273-26760	BEARING-MAIN SHAFT	1		4 SPEED 41 1	
	59	32128-07200	PIECE-DISTANCE,MAIN SHAFT	1	1	4 SPEED 41 1	
	60	32701-10400	GEAR-DRIVE,SPEEDOMETER (5T)	1	1	4 SPEED 41 1	
	61	32701-07200	GEAR-DRIVE,SPEEDOMETER (4T)	1	1	OP.4 SPEED 411	
	62	00927-21300	KEY-WOODRUFF	1	100	4 SPEED 41 1	
	63	34414-26760	WASHER-LOCK	1		4 SPEED 41 1	
	64	32142-26760	NUT-MAIN SHAFT	1	10	4 SPEED 41 1	
	65	32272-26760	BEARING-MAIN SHAFT PILOT	18	2	4 SPEED 41 1	
*	66	32120-09400	ASSY-RETAINER,MAIN SHAFT BEARING	1		4 SPEED 41 1	

Printed in Japan

REVISED: SEPTEMBER,1968

S	KEY NO.	PART NO.	PART NAME	Q'TY	SALES UNIT	MODEL	ICA
	67	32124-26760	PEG-LOCATING	1		4 SPEED 41 1	
	68	32703-04100	ASSY-PINION,SPEEDOMETER(18T)	1	2	4 SPEED 41 1	
	69	32703-07400	ASSY-PINION,SPEEDOMETER(15T)	1	2	4 SPEED 41 1	

REVISED: SEPTEMBER,1968

Printed in Japan

NOTE

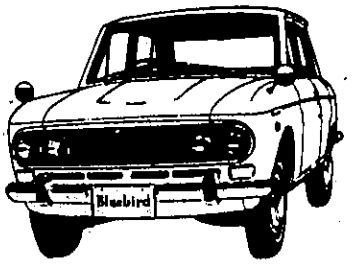

NOTE

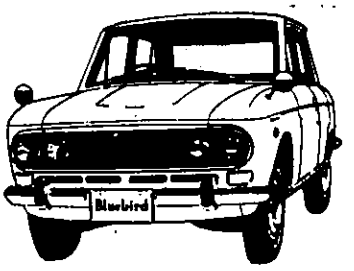

TRANSMISSION GEAR (4 SPEED) (FROM OCT-65)

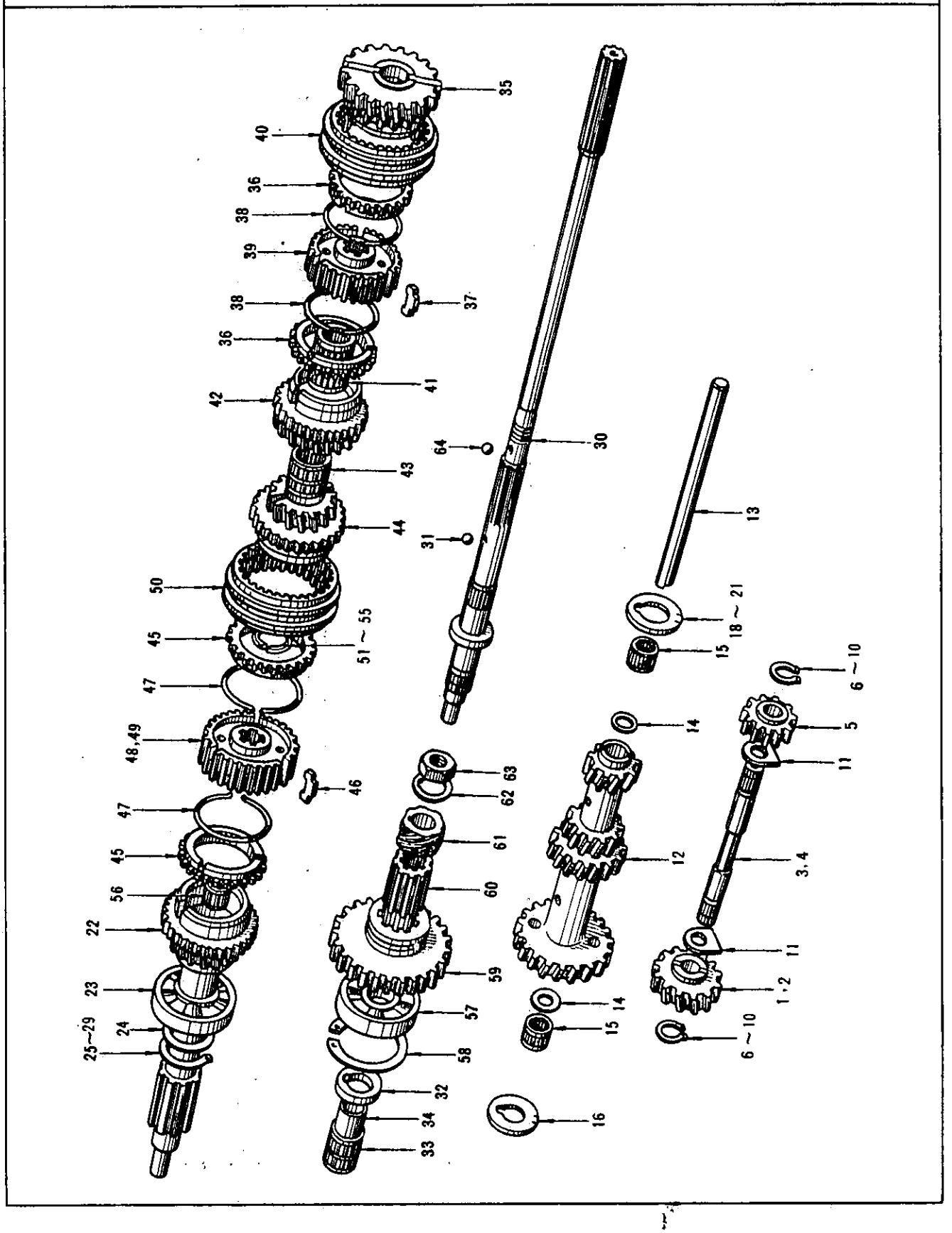

S	KEY NO.	PART NO.	PART NAME	Q'TY	SALES UNIT	MODEL	ICA
			TRANSMISSION GEAR (4 SPEED) (FROM OCT-65)				
	1	32280-27160	GEAR-REVERSE IDLER,COUNTER(17T)	1	1	4 SPEED(EXC.UTK,RL-UTK,WRL-UTK)411	
	2	32282-14600	GEAR-REVERSE IDLER,COUNTER(18T)	1	1	4 SPEED(EXC.UTK,RL-UTK,WRL-UTK)411	N
	3	32281-14601	SHAFT-REVERSE IDLER	1	1	4 SPEED(EXC.UTK,RL-UTK,WRL-UTK)411	
	4	32283-14601	BEARING-NEEDLE	2	10	4 SPEED(EXC.UTK,RL-UTK,WRL-UTK)411	
	5	32284-14600	GEAR-REVERSE IDLER,MAIN(14T)	1	1	4 SPEED(EXC.UTK,RL-UTK,WRL-UTK)411	
	6	32285-14600	RING-SNAP,REVERSE IDLER(2.0T)	1	10	4 SPEED(EXC.UTK,RL-UTK,WRL-UTK)411	
	7	32285-14601	RING-SNAP,REVERSE IDLER(2.2T)	1	10	4 SPEED(EXC.UTK,RL-UTK,WRL-UTK)411	
	8	32285-14602	RING-SNAP,REVERSE IDLER(1.3T)	1	10	4 SPEED(EXC.UTK,RL-UTK,WRL-UTK)411	
	9	32285-14603	RING-SNAP,REVERSE IDLER(1.5T)	1	10	4 SPEED(EXC.UTK,RL-UTK,WRL-UTK)411	

Printed in Japan

REVISED: SEPTEMBER,1968

S	KEY NO.	PART NO.	PART NAME	Q'TY	SALES UNIT	MODEL	ICA
	10	32285-14604	RING-SNAP,REVERSE IDLE R(1.1T)	1	10	4 SPEED(EX C.UTK,RL-U TK,WRL-UTK)411	
	11	32287-14600	WASHER-THRUST,REVERSE IDLER	1		4 SPEED(EX C.UTK,RL-U TK,WRL-UTK)411	
	12	32213-15800	GEAR-COUNTER(32T,29T,2 1T,15T)	1	1	4 SPEED(EX C.UTK,RL-U TK,WRL-UTK)411	
	13	32211-14600	SHAFT-COUNTER	1		4 SPEED(EX C.UTK,RL-U TK,WRL-UTK)411	
	14	32218-14600	SPACER-COUNTER SHAFT	1		4 SPEED(EX C.UTK,RL-U TK,WRL-UTK)411	
	15	32219-73200	ASSY-BEARING,NEEDLE	4	1	4 SPEED(EX C.UTK,RL-U TK,WRL-UTK)411	
	16	32224-14600	WASHER-THRUST,COUNTER, FRONT	1		4 SPEED(EX C.UTK,RL-U TK,WRL-UTK)411	
	17	32225-14600	WASHER-THRUST,COUNTER, REAR(2.40T)	1	10	4 SPEED(EX C.UTK,RL-U TK,WRL-UTK)411	
	18	32225-14601	WASHER-THRUST,COUNTER, REAR(2.45T)	1	10	4 SPEED(EX C.UTK,RL-U TK,WRL-UTK)411	
	19	32225-14602	WASHER-THRUST,COUNTER, REAR(2.50T)	1	10	4 SPEED(EX C.UTK,RL-U TK,WRL-UTK)411	

Printed in Japan

REVISED: SEPTEMBER,1968

S	KEY NO.	PART NO.	PART NAME	Q'TY	SALES UNIT	MODEL	ICA
	20	32225-14603	WASHER-THRUST,COUNTER, REAR(2.55T)	1	10	4 SPEED(EX C.UTK,RL-U TK,WRL-UTK)411	
	21	32225-14604	WASHER-THRUST,COUNTER, REAR(2.60T)	1	10	4 SPEED(EX C.UTK,RL-U TK,WRL-UTK)411	
	22	32200-16511	ASSY-GEAR,MAIN DRIVE(2 1T)	1	1	4 SPEED(EX C.UTK,RL-U TK,WRL-UTK)411	
	23	37510-86160	BEARING-MAIN DRIVE GEA R	1	1	4 SPEED(EX C.UTK,RL-U TK,WRL-UTK)411	
	24	32205-14601	WASHER-MAIN DRIVE GEAR	1	10	4 SPEED(EX C.UTK,RL-U TK,WRL-UTK)411	
	25	32204-08000	RING-SNAP,MAIN DRIVE G EAR(1.52T)	1	5	4 SPEED(EX C.UTK,RL-U TK,WRL-UTK)411	
	26	32204-08001	RING-SNAP,MAIN DRIVE G EAR(1.61T)	1	5	4 SPEED(EX C.UTK,RL-U TK,WRL-UTK)411	
	27	32204-08002	RING-SNAP,MAIN DRIVE G EAR(1.64T)	1	5	4 SPEED(EX C.UTK,RL-U TK,WRL-UTK)411	
	28	32204-08003	RING-SNAP,MAIN DRIVE G EAR(1.74T)	1	5	4 SPEED(EX C.UTK,RL-U TK,WRL-UTK)411	
	29	32204-08004	RING-SNAP,MAIN DRIVE G EAR(1.77T)	1		4 SPEED(EX C.UTK,RL-U TK,WRL-UTK)411	

Printed in Japan

REVISED: SEPTEMBER,1968

S	KEY NO.	PART NO.	PART NAME	Q'TY	SALES UNIT	MODEL	ICA
*	30	32241-15800	SHAFT-MAIN	1	1	4 SPEED(EXC.UTK,RL-UTK,WRL-UTK)411	
	31	32720-14600	BALL-STEEL 5/32"	1	20	4 SPEED(EXC.UTK,RL-UTK,WRL-UTK)411	
	32	32246-14600	WASHER-THRUST,MAIN SHAFT	1	5	4 SPEED(EXC.UTK,RL-UTK,WRL-UTK)411	
	33	32264-14600	BEARING-NEEDLE,MAIN SHAFT	1	1	4 SPEED(EXC.UTK,RL-UTK,WRL-UTK)411	
	34	32253-14600	BUSH-MAIN SHAFT,1ST GEAR	1	5	4 SPEED(EXC.UTK,RL-UTK,WRL-UTK)411	
	35	32230-73201	ASSY-GEAR,1ST SPEED,MAIN SHAFT(36T)	1	1	4 SPEED(EXC.UTK,RL-UTK,WRL-UTK)411	
	36	32604-14810	RING-BAULK,1ST & 2ND SPEED	2	1	4 SPEED(EXC.UTK,RL-UTK,WRL-UTK)411	
	37	32609-73200	INSERT-SHIFTING	3	10	4 SPEED(EXC.UTK,RL-UTK,WRL-UTK)411	
	38	32603-73200	SPRING-SPREAD	2	10	4 SPEED(EXC.UTK,RL-UTK,WRL-UTK)411	
	39	32601-73200	HUB-SYNCHRONIZER,1ST & 2ND SPEED	1	1	4 SPEED(EXC.UTK,RL-UTK,WRL-UTK)411	

REVISED: SEPTEMBER,1968

Printed in Japan

S	KEY NO.	PART NO.	PART NAME	Q'TY	SALES UNIT	MODEL	ICA
	40	32606-73200	SLEEVE-COUPLING	1		4 SPEED(EXC.UTK,RL-UTK,WRL-UTK)411	
	41	32264-14600	BEARING-NEEDLE,MAIN SHAFT	1	1	4 SPEED(EXC.UTK,RL-UTK,WRL-UTK)411	
	42	32250-16510	ASSY-GEAR,2ND SPEED,MAIN SHAFT(30T)	1	1	4 SPEED(EXC.UTK,RL-UTK,WRL-UTK)411	
	43	32264-14600	BEARING-NEEDLE,MAIN SHAFT	1	1	4 SPEED(EXC.UTK,RL-UTK,WRL-UTK)411	
	44	32260-16510	ASSY-GEAR,3RD SPEED,MAIN SHAFT(27T)	1	1	4 SPEED(EXC.UTK,RL-UTK,WRL-UTK)411	
	45	32604-14810	RING-BAULK,3RD & 4TH SPEED	2	1	4 SPEED(EXC.UTK,RL-UTK,WRL-UTK)411	
	46	32609-73200	INSERT-SHIFTING	3	10	4 SPEED(EXC.UTK,RL-UTK,WRL-UTK)411	
	47	32603-73200	SPRING-SPREAD	2	10	4 SPEED(EXC.UTK,RL-UTK,WRL-UTK)411	
	48	32605-73200	HUB-SYNCHRONIZER,3RD & 4TH SPEED(TO C/# PL411-UT-36083 WPL411-UT-812409)	1	1	4 SPEED(EXC.UTK,RL-UTK,WRL-UTK)411	
	49	32605-73201	HUB-SYNCHRONIZER, 3RD & 4TH(FROM C/# PL411-UT-36084 WPL411-UT-812410)	1		4 SPEED(EXC.UTK,RL-UTK,WRL-UTK)411	Y

REVISED: SEPTEMBER,1968

Printed in Japan

S	KEY NO.	PART NO.	PART NAME	Q'TY	SALES UNIT	MODEL	ICA
	50	32606-73200	SLEEVE-COUPLING	1		4 SPEED(EXC.UTK,RL-UTK,WRL-UTK)411	
	51	32263-14600	RING-SNAP,SYNCHRONIZER,HUB(1.40T)	1	10	4 SPEED(EXC.UTK,RL-UTK,WRL-UTK)411	
	52	32263-14601	RING-SNAP,SYNCHRONIZER,HUB(1.45T)	1	10	4 SPEED(EXC.UTK,RL-UTK,WRL-UTK)411	
	53	32263-14602	RING-SNAP,SYNCHRONIZER,HUB(1.50T)	1	10	4 SPEED(EXC.UTK,RL-UTK,WRL-UTK)411	
	54	32263-14603	RING-SNAP,SYNCHRONIZER,HUB(1.55T)	1	10	4 SPEED(EXC.UTK,RL-UTK,WRL-UTK)411	
	55	32263-14604	RING-SNAP,SYNCHRONIZER,HUB(1.60T)	1	10	4 SPEED(EXC.UTK,RL-UTK,WRL-UTK)411	
	56	32272-14600	BEARING-PILOT,MAIN SHAFT	1	5	4 SPEED(EXC.UTK,RL-UTK,WRL-UTK)411	
	57	32273-36900	BEARING-MAIN SHAFT	1	1	4 SPEED(EXC.UTK,RL-UTK,WRL-UTK)411	
	58	32274-36900	RING-SNAP,MAIN SHAFT BEARING	1		4 SPEED(EXC.UTK,RL-UTK,WRL-UTK)411	
	59	32245-14600	GEAR-REVERSE,MAIN SHAFT(39T)	1		4 SPEED(EXC.UTK,RL-UTK,WRL-UTK)411	

REVISED: SEPTEMBER,1968

Printed in Japan

S	KEY NO.	PART NO.	PART NAME	Q'TY	SALES UNIT	MODEL	ICA
	60	32258-14600	HUB-REVERSE,MAIN SHAFT	1	5	4 SPEED(EXC.UTK,RL-UTK,WRL-UTK)411	
	61	32701-15800	GEAR-DRIVE,SPEEDOMETER (5T)	1	1	4 SPEED(EXC.UTK,RL-UTK,WRL-UTK)411	
	62	34414-26760	WASHER-LOCK,MAIN SHAFT	1		4 SPEED(EXC.UTK,RL-UTK,WRL-UTK)411	
	63	32142-26760	NUT-MAIN SHAFT	1	10	4 SPEED(EXC.UTK,RL-UTK,WRL-UTK)411	
	64	32720-14600	BALL-STEEL 5/32	1	20	4 SPEED(EXC.UTK,RL-UTK,WRL-UTK)411	

REVISED: SEPTEMBER,1968

Printed in Japan

NOTE

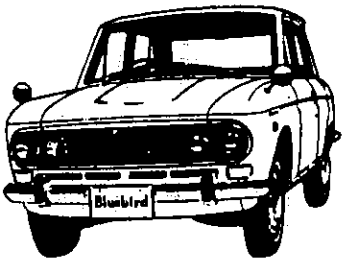

NOTE

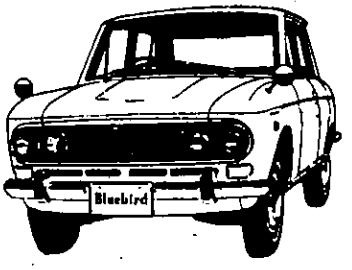

TRANSMISSION GEAR (C SYNCHROMESH) (FROM OCT-65)

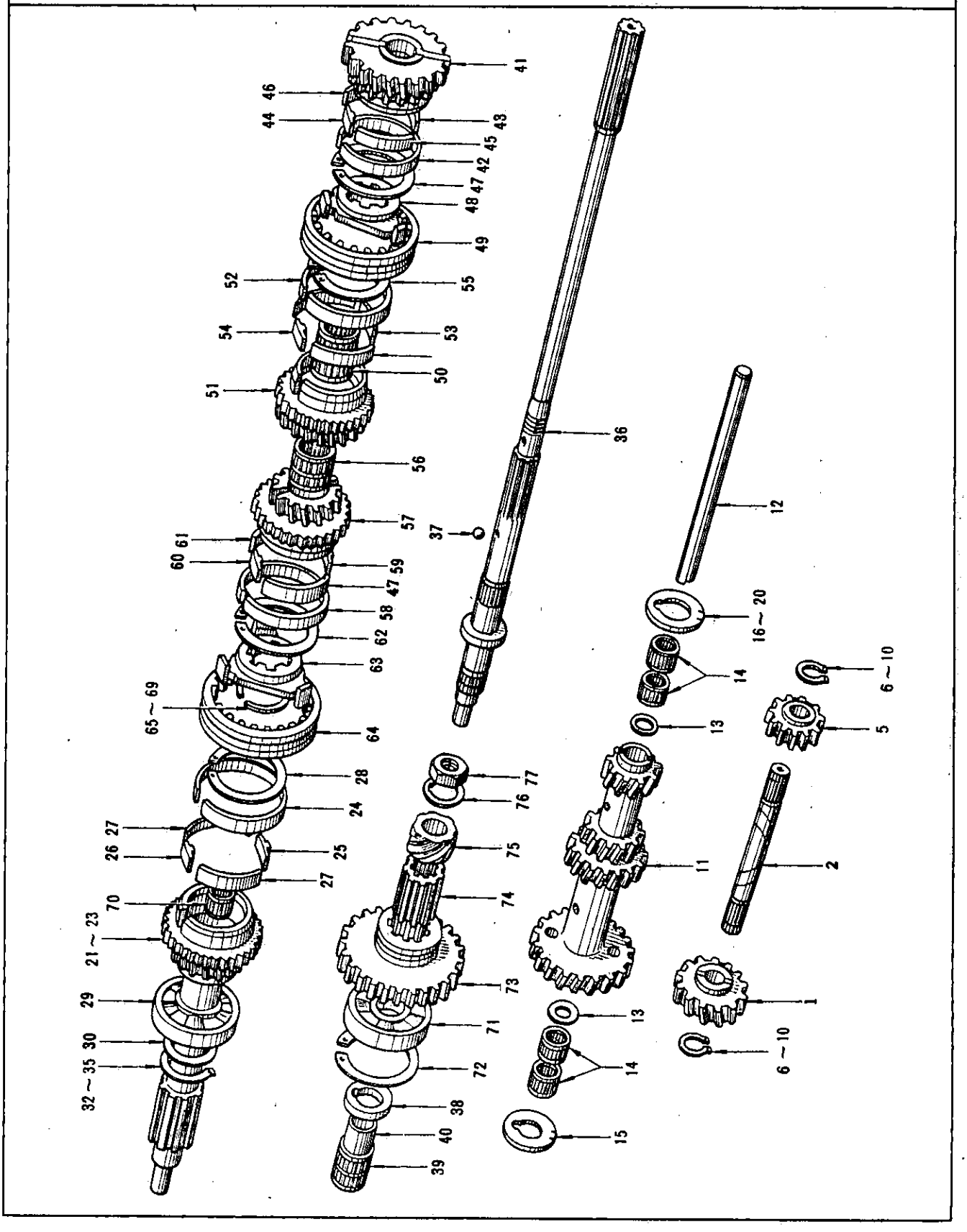

S	KEY NO.	PART NO.	PART NAME	Q'TY	SALES UNIT	MODEL	ICA
			TRANSMISSION GEAR (C SYNCHROMESH) (FROM OCT-65)				
	1	32282-14600	GEAR-REVERSE IDLER COUNTER(18T)	1	1	411 UTK,RL-UTK,WRL-UTK	
	2	32281-14601	SHAFT-REVERSE IDLER	1	1	411 UTK,RL-UTK,WRL-UTK	
*	3	32287-14601	WASHER-THRUST,REVERSE IDLER	1		411 UTK,RL-UTK,WRL-UTK	
	4	32283-14601	BEARING-NEEDLE	2	10	411 UTK,RL-UTK,WRL-UTK	
	5	32284-14600	GEAR-MAIN,REVERSE IDLER(14T)	1	1	411 UTK,RL-UTK,WRL-UTK	
	6	32285-14600	RING-SNAP,REVERSE IDLER(T=1.2)	1	10	411 UTK,RL-UTK,WRL-UTK	
	7	32285-14601	RING-SNAP,REVERSE IDLER(T=1.4)	1	10	411 UTK,RL-UTK,WRL-UTK	
	8	32285-14602	RING-SNAP,REVERSE IDLER(T=1.3)	1	10	411 UTK,RL-UTK,WRL-UTK	
	9	32285-14603	RING-SNAP,REVERSE IDLER(T=1.5)	1	10	411 UTK,RL-UTK,WRL-UTK	
	10	32285-14604	RING-SNAP,REVERSE IDLER(T=1.1)	1	10	411 UTK,RL-UTK,WRL-UTK	
	11	32213-15800	GEAR-COUNTER(32T,29T,21T,15T)	1	1	411 UTK,RL-UTK,WRL-UTK	

REVISED: SEPTEMBER,1968

Printed in Japan

S	KEY NO.	PART NO.	PART NAME	Q'TY	SALES UNIT	MODEL	ICA
	12	32211-14600	SHAFT-COUNTER	1		411 UTK,RL-UTK,WRL-UTK	
	13	32218-14600	RING-COUNTER SHAFT	2		411 UTK,RL-UTK,WRL-UTK	
*	14	32219-10600	ASSY-BEARING,NEEDLE	2		411 UTK,RL-UTK,WRL-UTK	
	15	32224-14600	WASHER-THRUST,COUNTER,FRONT	1		411 UTK,RL-UTK,WRL-UTK	
	16	32225-14600	WASHER-THRUST,COUNTER,REAR(T=2.40)	AR	10	411 UTK,RL-UTK,WRL-UTK	
	17	32225-14601	WASHER-THRUST,COUNTER,REAR(T=2.45)	AR	10	411 UTK,RL-UTK,WRL-UTK	
	18	32225-14602	WASHER-THRUST,COUNTER,REAR(T=2.50)	AR	10	411 UTK,RL-UTK,WRL-UTK	
	19	32225-14603	WASHER-THRUST,COUNTER,REAR(T=2.55)	AR	10	411 UTK,RL-UTK,WRL-UTK	
	20	32225-14604	WASHER-THRUST,COUNTER,REAR(T=2.60)	AR	10	411 UTK,RL-UTK,WRL-UTK	
	21	32202-16700	COMP.-GEAR,MAIN DRIVE(21T)	1	10	411 UTK	
	22	32202-15800	COMP.-GEAR,MAIN DRIVE(21T)	1	1	411 RL-UTK,WRL-UTK	
	23	32202-14600	COMP.-GEAR,MAIN DRIVE(22T)	1	1	OP.411 UTK,RL-UTK,WRL-UTK	
	24	32611-14600	RING-SYNCHRONIZER	1		411 UTK,RL-UTK,WRL-UTK	

Printed in Japan

REVISED: SEPTEMBER,1968

S	KEY NO.	PART NO.	PART NAME	Q'TY	SALES UNIT	MODEL	ICA
	25	32612-14601	BLOCK-THRUST,2ND,3RD & 4TH	1	1	411 UTK,RL -UTK,WRI -UTK	
	26	32613-14601	BLOCK-ANCHOR,2ND,3RD & 4TH	1		411 UTK,RL -UTK,WRI -UTK	
	27	32614-14600	BAND-BRAKE,2.5	2		411 UTK,RL -UTK,WRI -UTK	
	28	32616-14600	CIRCLIP	1	1	411 UTK,RL -UTK,WRI -UTK	
	29	37510-86160	BEARING-MAIN DRIVE GEAR	1	1	411 UTK,RL -UTK,WRI -UTK	
	30	32205-14601	WASHER-MAIN DRIVE GEAR	1	10	411 UTK,RL -UTK,WRI -UTK	
	31	32204-08000	RING-SNAP,MAIN DRIVE GEAR(T=1.52)	1	5	411 UTK,RL -UTK,WRI -UTK	
	32	32204-08001	RING-SNAP,MAIN DRIVE GEAR(T=1.61)	1	5	411 UTK,RL -UTK,WRI -UTK	
	33	32204-08002	RING-SNAP,MAIN DRIVE GEAR(T=1.64)	1	5	411 UTK,RL -UTK,WRI -UTK	
	34	32204-08003	RING-SNAP,MAIN DRIVE GEAR(T=1.74)	1	5	411 UTK,RL -UTK,WRI -UTK	
	35	32204-08004	RING-SNAP,MAIN DRIVE GEAR(T=1.77)	1		411 UTK,RL -UTK,WRI -UTK	
*	36	32241-15800	SHAFT-MAIN	1	1	411 UTK,RL -UTK,WRI -UTK	
	37	32720-14600	BALL-STEEL,5/32	1	20	411 UTK,RL -UTK,WRI -UTK	

REVISED: SEPTEMBER,1968

Printed in Japan

S	KEY NO.	PART NO.	PART NAME	Q'TY	SALES UNIT	MODEL	ICA
	38	32246-14600	WASHER-THRUST,MAIN SHAFT	1	5	411 UTK,RL-UTK,WRL-UTK	
	39	32264-14600	BEARING-NEEDLE,MAIN SHAFT	1	1	411 UTK,RL-UTK,WRL-UTK	
	40	32253-14600	BUSH-MAIN SHAFT,1ST GEAR	1	5	411 UTK,RL-UTK,WRL-UTK	
	41	32232-14600	COMP.-GEAR,1ST SPEED,MAIN SHAFT(36T)	1	1	411 UTK,RL-UTK,WRL-UTK	
	42	32611-14600	RING-SYNCHRONIZER	1		411 UTK,RL-UTK,WRL-UTK	
	43	32617-14601	BLOCK-THRUST,1ST	1	1	411 UTK,RL-UTK,WRL-UTK	
	44	32618-14601	BLOCK-ANCHOR,1ST	1		411 UTK,RL-UTK,WRL-UTK	
	45	32614-14600	BAND-BRAKE,2.5	1		411 UTK,RL-UTK,WRL-UTK	
	46	32615-14600	BAND-BRAKE,2.2	1		411 UTK,RL-UTK,WRL-UTK	
	47	32616-14600	CIRCLIP	1	1	411 UTK,RL-UTK,WRL-UTK	
	48	32601-14600	HUB-SYNCHRONIZER,1ST & 2ND SPEED	1		411 UTK,RL-UTK,WRL-UTK	
	49	32606-14600	SLEEVE-COUPLING	1	1	411 UTK,RL-UTK,WRL-UTK	
	50	32264-14600	BEARING-NEEDLE,MAIN SHAFT	1	1	411 UTK,RL-UTK,WRL-UTK	

Printed in Japan

REVISED: SEPTEMBER,1968

S	KEY NO.	PART NO.	PART NAME	Q'TY	SALES UNIT	MODEL	ICA
	51	32252-14600	COMP.-GEAR,2ND SPEED,MAIN SHAFT(30T)	1	1	411 UTK,RL-UTK,WRI-UTK	
	52	32611-14600	RING-SYNCHRONIZER	1		411 UTK,RL-UTK,WRI-UTK	
	53	32612-14601	BLOCK-THRUST,2ND,3RD & 4TH	1	1	411 UTK,RL-UTK,WRI-UTK	
	54	32613-14601	BLOCK-ANCHOR,2ND,3RD & 4TH	1		411 UTK,RL-UTK,WRI-UTK	
	55	32616-14600	CIRCLIP	1	1	411 UTK,RL-UTK,WRI-UTK	
	56	32264-14600	BEARING-NEEDLE,MAIN SHAFT	1	1	411 UTK,RL-UTK,WRI-UTK	
	57	32262-14600	COMP.-GEAR,3RD SPEED,MAIN SHAFT(27T)	1	5	411 UTK,RL-UTK,WRI-UTK	
	58	32611-14600	RING-SYNCHRONIZER	1		411 UTK,RL-UTK,WRI-UTK	
	59	32612-14601	BLOCK-THRUST,2ND,3RD & 4TH	1	1	411 UTK,RL-UTK,WRI-UTK	
	60	32613-14601	BLOCK-ANCHOR,2ND,3RD & 4TH	1		411 UTK,RL-UTK,WRI-UTK	
	61	32614-14600	BAND-BRAKE,2.5	2		411 UTK,RL-UTK,WRI-UTK	
	62	32616-14600	CIRCLIP	1	1	411 UTK,RL-UTK,WRI-UTK	
	63	32605-14600	HUB-SYNCHRONIZER,3RD & 4TH SPEED	1	1	411 UTK,RL-UTK,WRI-UTK	

REVISED: SEPTEMBER,1968

Printed in Japan

S	KEY NO.	PART NO.	PART NAME	Q'TY	SALES UNIT	MODEL	ICA
	64	32606-14600	SLEEVE-COUPLING	1	1	411 UTK,RL-UTK,WRL-UTK	
	65	32263-14600	RING-SNAP,SYNCHRONIZER,HUB(T=1.40)	1	10	411 UTK,RL-UTK,WRL-UTK	
	66	32263-14601	RING-SNAP,SYNCHRONIZER,HUB(T=1.45)	1	10	411 UTK,RL-UTK,WRL-UTK	
	67	32263-14602	RING-SNAP,SYNCHRONIZER,HUB(T=1.50)	1	10	411 UTK,RL-UTK,WRL-UTK	
	68	32263-14603	RING-SNAP,SYNCHRONIZER,HUB(T=1.55)	1	10	411 UTK,RL-UTK,WRL-UTK	
	69	32263-14604	RING-SNAP,SYNCHRONIZER,HUB(T=1.60)	1	10	411 UTK,RL-UTK,WRL-UTK	
	70	32272-14600	BEARING-PILOT,MAIN SHAFT	1	5	411 UTK,RL-UTK,WRL-UTK	
	71	32273-36900	BEARING-MAIN SHAFT	1	1	411 UTK,RL-UTK,WRL-UTK	
	72	32274-36900	RING-SNAP,MAIN SHAFT BEARING	1		411 UTK,RL-UTK,WRL-UTK	
	73	32245-14600	GEAR-REVERSE,MAIN SHAFT(39T)	1		411 UTK,RL-UTK,WRL-UTK	
	74	32258-14600	HUB-REVERSE,MAIN SHAFT	1	5	411 UTK,RL-UTK,WRL-UTK	
	75	32701-15800	GEAR-DRIVE,SPEEDOMETER(5T)	1	1	411 UTK,RL-UTK,WRL-UTK	
	76	32141-14600	WASHER-LOCK,MAIN SHAFT	1	1	411 UTK,RL-UTK,WRL-UTK	

REVISED: SEPTEMBER,1968

Printed in Japan

S	KEY NO.	PART NO.	PART NAME	Q'TY	SALES UNIT	MODEL	ICA
	77	32142-26760	NUT-MAIN SHAFT	1	10	411 UTK,RL -UTK,WRL-U TK	

Printed in Japan

REVISED: SEPTEMBER,1968

NOTE

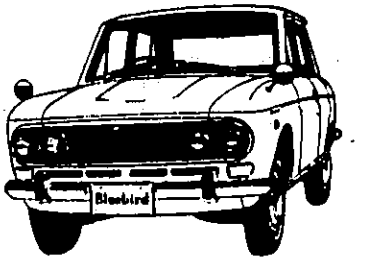

NOTE

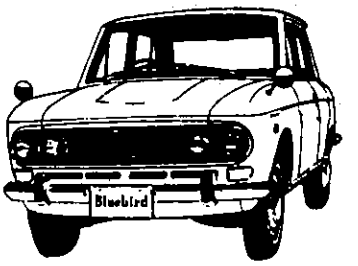

TRANSMISSION FORK & LEVER (4 SPEED) (TO SEP-65)

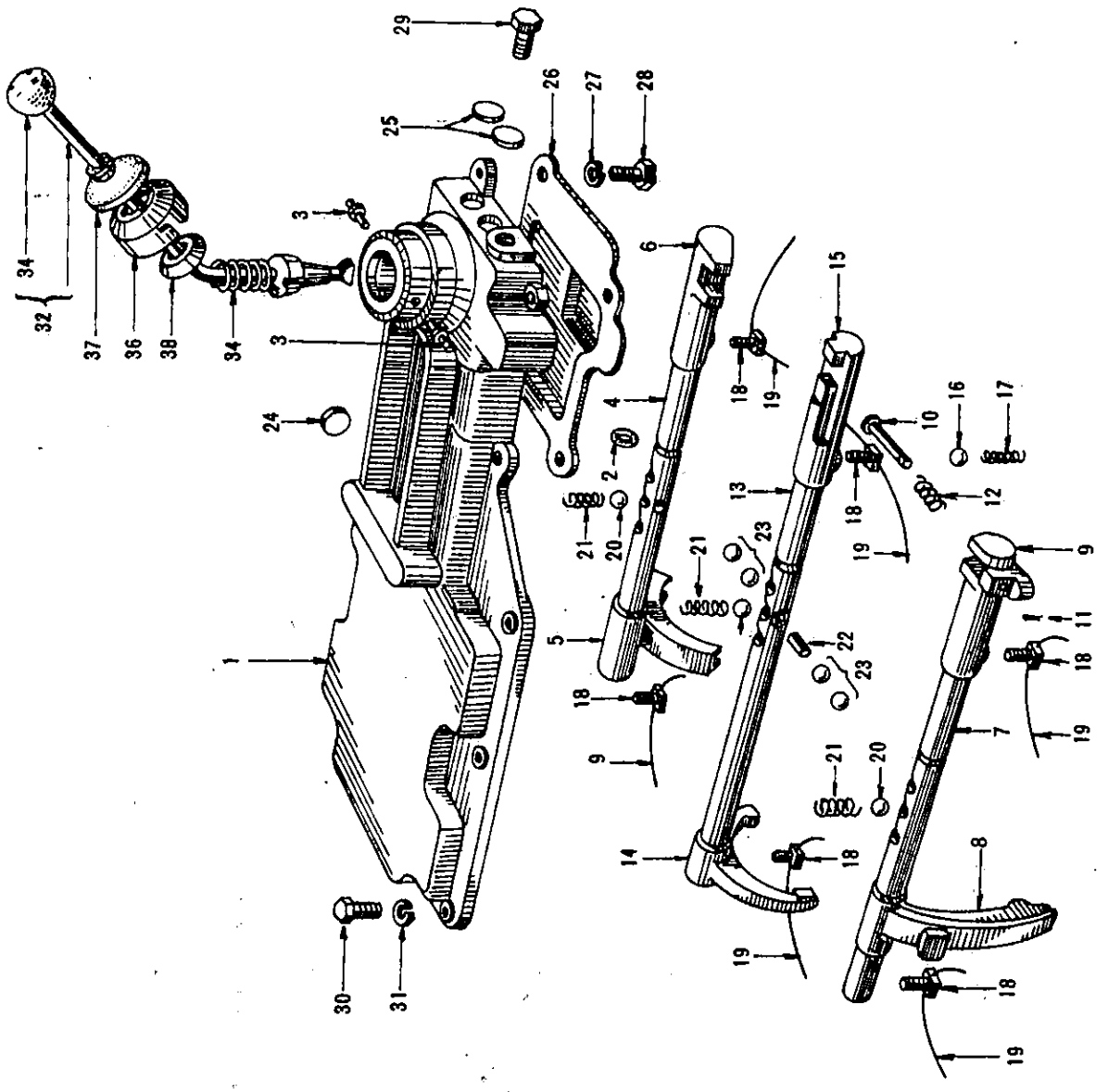

S	KEY NO.	PART NO.	PART NAME	Q'TY	SALES UNIT	MODEL	ICA
			TRANSMISSION FORK & LEVER (4 SPEED) (TO SEP-65)				
*	1	32162-09600	COVER-TRANSMISSION	1		4 SPEED 41 1	
	2	32891-09600	RING-"O" SHIFT ROD	3		4 SPEED 41 1	
	3	32849-09600	PIN-CONTROL LEVER,PIVOT	2	10	4 SPEED 41 1	
	4	32801-09600	ROD-FORK,1ST & 2ND SPEED	1	1	4 SPEED 41 1	
	5	32805-09600	FORK-1ST & 2ND SPEED	1	1	4 SPEED 41 1	
	6	32892-09600	BRACKET-ROD,1ST & 2ND	1	1	4 SPEED 41 1	
	7	32816-09600	ROD-FORK,REVERSE	1	1	4 SPEED 41 1	
	8	32819-09600	FORK-REVERSE	1	1	4 SPEED 41 1	
	9	32893-09601	BRACKET-ROD,REVERSE	1	1	4 SPEED 41 1	
	10	32823-09600	PIN-FORK,REVERSE	1	10	4 SPEED 41 1	
*	11	00921-11800	PIN-COTTER	1	50	4 SPEED 41 1	
	12	32824-09600	SPRING-PIN,REVERSE FORK	1	5	4 SPEED 41 1	
	13	32809-09600	ROD-FORK,3RD & 4TH SPEED	1	1	4 SPEED 41 1	
	14	32811-03200	FORK-3RD & 4TH SPEED	1		4 SPEED 41 1	
	15	32813-09600	BRACKET-ROD,3RD & 4TH SPEED	1	1	4 SPEED 41 1	

S	KEY NO.	PART NO.	PART NAME	Q'TY	SALES UNIT	MODEL	ICA
	16	32827-26760	BALL-CHECKING	1	50	4 SPEED 41 1	
	17	32825-26761	SPRING-POPPET PIN	1	10	4 SPEED 41 1	
	18	32803-03200	SCREW-SET	6	10	4 SPEED 41 1	
	19	32804-85060	WIRE-LOCK	6	1	4 SPEED 41 1	
	20	32829-26760	BALL-CHECKING	3	10	4 SPEED 41 1	
	21	32830-03200	SPRING-POPPET,SHIFT RO D	3		4 SPEED 41 1	
	22	32826-03200	PIN-INTER LOCK	1	10	4 SPEED 41 1	
	23	32827-26760	BALL-INTER LOCK	4	50	4 SPEED 41 1	
	24	32167-03200	PLUG-WELCH	1	10	4 SPEED 41 1	
	25	32168-03200	PLUG-WELCH	2	10	4 SPEED 41 1	
	26	32895-09600	PLATE-DUST	1	1	4 SPEED 41 1	
*	27	00915-11400	WASHER-LOCK	4	50	4 SPEED 41 1	
	28	00111-41010	BOLT	4		4 SPEED 41 1	
	29	00931-43000	PLUG	1		4 SPEED 41 1	
	30	32165-09600	BOLT TO FIX TRANSMISSI ON COVER	6	50	4 SPEED 41 1	
*	31	00915-11500	WASHER-LOCK TO FIX TRA NSMISSION COVER	6	50	4 SPEED 41 1	
	32	32841-12401	ASSY-LEVER,CONTROL	1		4 SPEED 41 1	

Printed in Japan

REVISED: SEPTEMBER,1968

S	KEY NO.	PART NO.	PART NAME	Q'TY	SALES UNIT	MODEL	ICA
	33	32869-03200	BOOT-CONTROL LEVER,OUTER	1		4 SPEED 411	
	34	32865-12400	KNOB-CONTROL LEVER	1	2	4 SPEED 411	
*	35	32850-03200	SPRING-LEVER,CONTROL	1	10	4 SPEED 411	
	36	32852-09600	CAP-COVER,TRANSMISSION CASE	1	10	4 SPEED 411	
	37	32853-03200	BOOT-RUBBER	1	5	4 SPEED 411	
	38	32851-09600	SEAT-LEVER SPRING	1	10	4 SPEED 411	
	39	32857-03200	SCREW-STOP,REVERSE FORK	1	10	4 SPEED 411	
	40	00911-31510	NUT-PLAIN	1		4 SPEED 411	

REVISED: SEPTEMBER,1968

Printed in Japan

NOTE

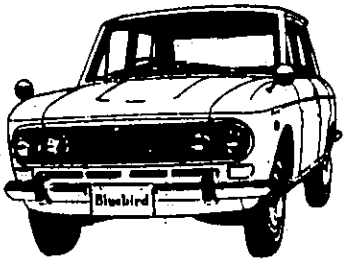

NOTE

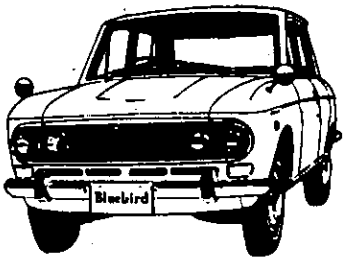

TRANSMISSION CONTROL (4 SPEED) (FROM OCT-65)

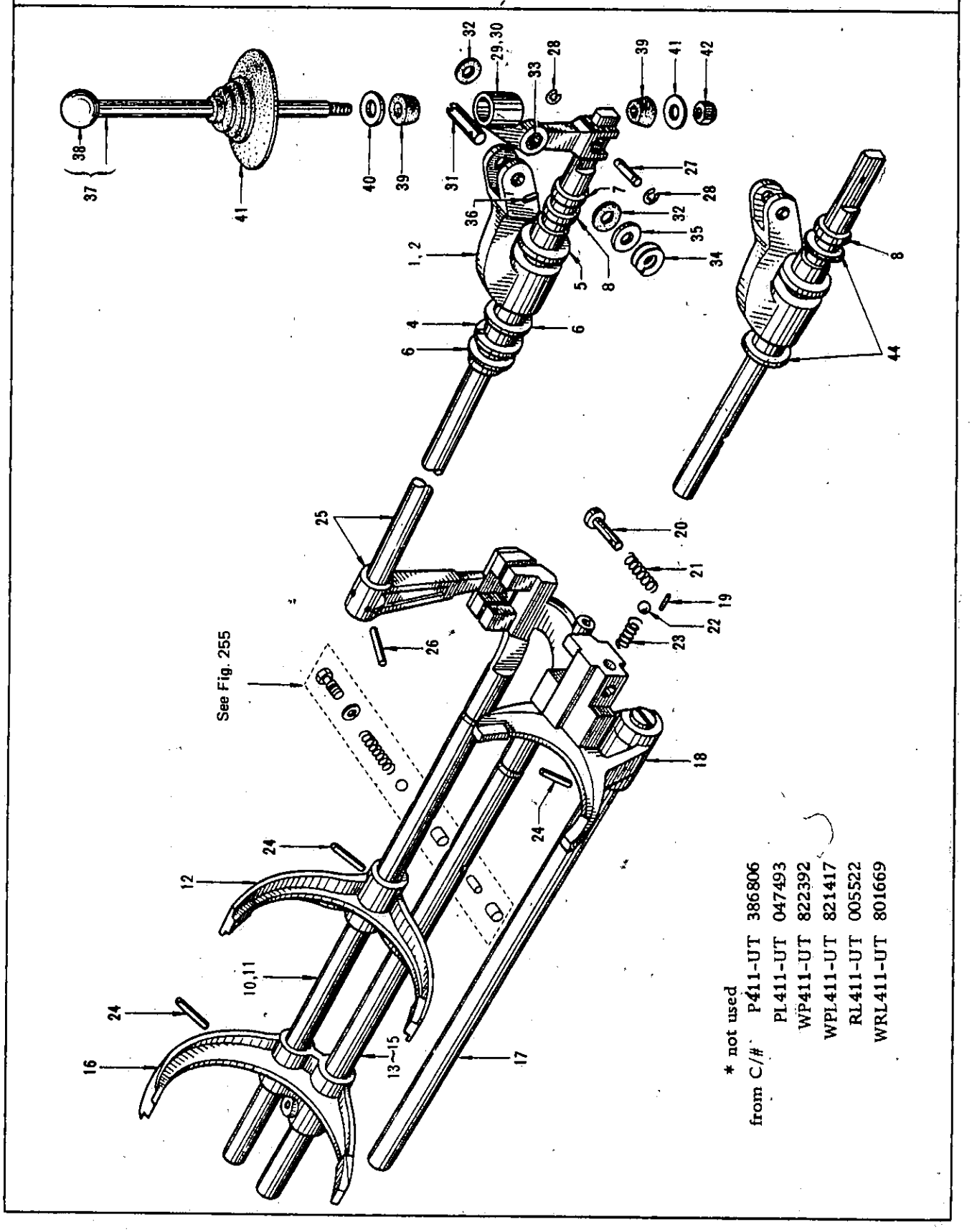

TRANSMISSION CONTROL (4 SPEED) (FROM OCT-65)

S	KEY NO.	PART NO.	PART NAME	QTY	SALES UNIT	MODEL	
*	1	32844-14600	ARM-CONTROL	1		4 SPEED 41 1	
	2	32844-18800	ARM-CONTROL FROM C/# SEE FIG 261	1	1	4 SPEED 41 1	N
	3	32887-14600	BUSHING-STRIKING ROD	1	10	4 SPEED 41 1	
*	4	32852-14600	SPRING-STRIKING TO C/# SEE FIG 261	1	10	4 SPEED 41 1	
	5	32875-14600	WASHER-THRUST,CONTROL ARM TO C/# SEE FIG 261	1	10	4 SPEED 41 1	
	6	32876-14600	WASHER-THRUST,CONTROL ARM TO C/# SEE FIG 261	2	10	4 SPEED 41 1	
	7	32857-14600	CAP-RING,"O"	1	10	4 SPEED 41 1	
	8	32858-14600	RING-"O",STRIKING ROD	1		4 SPEED 41 1	
*	9	32801-16510	COMP.-ROD,FORK,1ST & 2ND BORG-WARNER TYPE	1	1	4 SPEED 1. 3L 411	
	10	32801-16511	COMP.-ROD,FORK,1ST & 2ND(BORG-WARNER TYPE)	1	1	4 SPEED 1. 3L 411	Y
	11	32801-14600	COMP.-ROD,FORK,1ST & 2ND(PORSHE TYPE)	1		4 SPEED 1. 6L 411	
	12	32805-14600	FORK-SHIFT,1ST & 2ND	1	1	4 SPEED 41 1	
*	13	32809-16510	COMP.-ROD,FORK,3RD & 4TH(BORG-WARNER TYPE)	1	1	4 SPEED 1. 3L 411	
	14	32809-16511	COMP.-ROD,FORK,3RD & 4TH(BORG-WARNER TYPE)	1	1	4 SPEED 1. 3L 411	Y
*	15	32809-14600	COMP.-ROD,FORK,3RD & 4TH(PORSHE TYPE)	1		4 SPEED 1. 6L 411	

Printed in Japan

REVISED: SEPTEMBER,1968

S	KEY NO.	PART NO.	PART NAME	Q'TY	SALES UNIT	MODEL	ICA
	16	32811-14600	FORK-SHIFT,3RD & 4TH	1	1	4 SPEED 41 1	
	17	32816-14600	ROD-FORK,REVERSE	1	10	4 SPEED 41 1	
*	18	32819-14600	FORK-SHIFT,REVERSE	1	1	4 SPEED 41 1	
	19	32712-61000	PIN-ROLLER	1		4 SPEED 41 1	
	20	32823-14600	PIN-REVERSE FORK	1	5	4 SPEED 41 1	
	21	32824-09600	SPRING-RETURN,REVERSE PIN	1	5	4 SPEED 41 1	
	22	32827-26760	BALL-CHECK,REVERSE FOR K	1	50	4 SPEED 41 1	
	23	32825-14600	SPRING-CHECK,REVERSE F ORK	1	50	4 SPEED 41 1	
	24	32292-14600	PIN-RETAINING	3	10	4 SPEED 41 1	
	25	32890-15800	ASSY-ROD,STRIKING	1	1	4 SPEED 41 1	
	26	32292-14600	PIN-RETAINING	1	10	4 SPEED 41 1	
	27	32877-14600	PIN-STRIKING ROD	1	10	4 SPEED 41 1	
	28	32878-14600	RING"C"-STRIKING PIN	2	10	4 SPEED 41 1	
	29	32843-14650	BRACKET-LEVER,CONTROL	1		4 SPEED 41 1	
	30	32843-15850	BRACKET-LEVER,CONTROL	1	1	4 SPEED 41 1	
	31	32849-14600	PIN-CONTROL ARM	1	10	4 SPEED 41 1	
	32	32888-14600	WASHER-CONTROL PIN	2	1	4 SPEED 41 1	

Printed in Japan

REVISED: SEPTEMBER,1968

S	KEY NO.	PART NO.	PART NAME	QTY	SALES UNIT	MODEL	ICA
	33	32889-14600	BUSH-CONTROL PIN	1	2	4 SPEED 41 1	
	34	32851-14600	SPRING-CONTROL	1	10	4 SPEED 41 1	
	35	32879-14600	WASHER-THRUST,CONTROL PIN	1		4 SPEED 41 1	
	36	32873-14600	PIN-RETAINING	1		4 SPEED 41 1	
	37	32841-15851	ASSY-LEVER,CONTROL	1		4 SPEED 41 1	
	38	32865-14600	KNOB-CONTROL LEVER	1		4 SPEED 41 1	
	39	32853-14600	RUBBER-CONTROL LEVER	2		4 SPEED 41 1	
	40	32885-14600	WASHER-CONTROL LEVER,UPPER	1	10	4 SPEED 41 1	
	41	32886-14600	WASHER-CONTROL LEVER,LOWER	1		4 SPEED 41 1	
	42	00912-54600	NUT-SELF LOCKING	1	50	4 SPEED 41 1	
	43	74963-15800	BOOT-RUBBUER,CONTROL LEVER	1	5	4 SPEED 41 1	
	44	32845-18800	RING"O",CONTROL ARM	2	5	4 SPEED 41 1	

Rubber Boot for Gear Lever

Do not use fig 41

REVISED: SEPTEMBER, 1968

Printed in Japan

NOTE

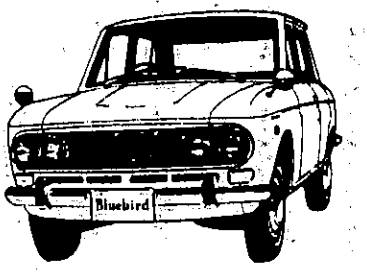

NOTE

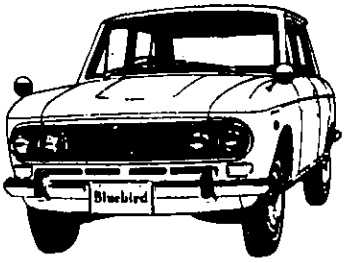

TRANSMISSION CASE (AUTOMATIC)

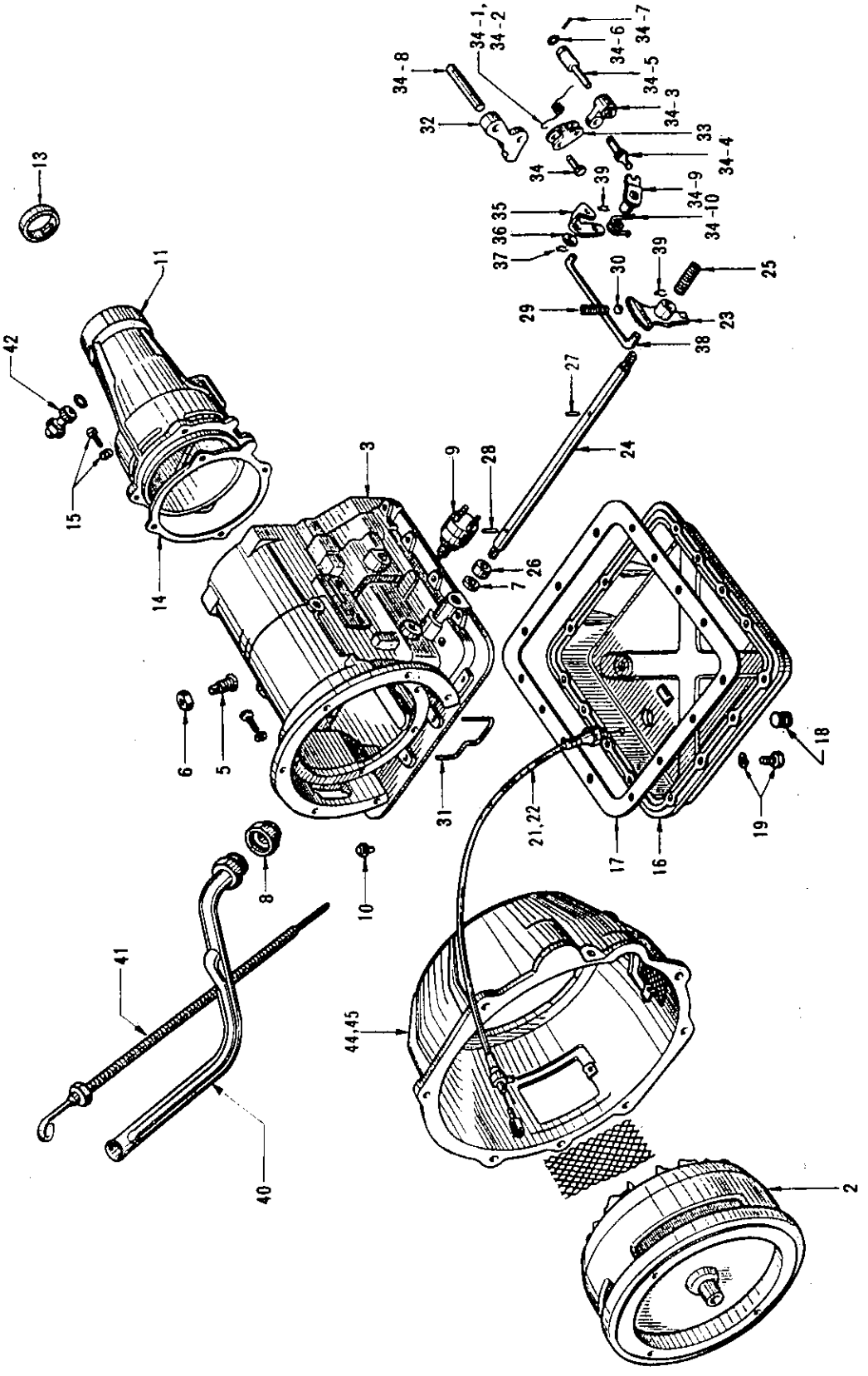

Note:

Key No. 50	Inc. case, bush, connector, pins and oil seal.
Key No. 51	Inc. release spring and toggle pin.
Key No. 52	Inc. shaft, lever and pins.

SEPTEMBER, 1968

Printed in Japan

S	KEY NO.	PART NO.	PART NAME	Q'TY	SALES UNIT	MODEL	ICA
			TRANSMISSION CASE (AUTOMATIC)				
	1	31000-24550	ASSY-AUTOMATIC TRANSMISSION WITH TORQUE CONVERTOR	1		411 RL-UAK ,WRL-UAK	
	2	31100-20200	ASSY-CONVERTER,TORQUE(35EC-1A368A)	1		411 RL-UAK ,WRL-UAK	
	3	BWC00-00001	ASSY-CASE,AUTOMATIC TRANSMISSION(35E-A1F)	1		411 RL-UAK ,WRL-UAK	
	4	BWC00-00002	PLUG-PIPE 1/8 HEADLESS COUNTERSUNK(444688)	1		411 RL-UAK ,WRL-UAK	
	5	BWC00-00003	SCREW-REAR SERVO,ADJUSTING(4626Z)	1		411 RL-UAK ,WRL-UAK	
	6	BWC00-00004	NUT-ADJUSTING SCREW,LOCKING REAR SERVO(4775R)	1		411 RL-UAK ,WRL-UAK	
	7	BWC00-00005	SEAL-OIL,CONTROL SHAFT(35E-108)	2	1	411 RL-UAK ,WRL-UAK	
	8	BWC00-00006	ADAPTOR-TUBE CONNECTOR(35EA-385A)	1		411 RL-UAK ,WRL-UAK	
	9	BWH00-00007	SWITCH-INHIBITOR(35EA-A286C)	1	1	411 RL-UAK ,WRL-UAK	
	10	BWC00-00008	CONNECTOR-TUBE OUTLET OIL COOLER(35EA-293)	2		411 RL-UAK ,WRL-UAK	
	11	BWB00-00009	ASSY-HOUSING,EXTENSION(35EC-1A7C)	1	1	411 RL-UAK ,WRL-UAK	
	12	BWC00-00010	BUSHING-EXTENSION(20-847)	1		411 RL-UAK ,WRL-UAK	
	13	BWC00-00011	SEAL-OIL(R40-10)	1	5	411 RL-UAK ,WRL-UAK	
	14	BWC00-00012	GASKET-EXTENSION HOUSING(35-146)	1		411 RL-UAK ,WRL-UAK	
	15	BWC00-00013	BOLT(431922)	4	1	411 RL-UAK ,WRL-UAK	

Printed in Japan

REVISED: SEPTEMBER,1968

S	KEY NO.	PART NO.	PART NAME	Q'TY	SALES UNIT	MODEL	ICA
	16	BW800-00014	ASSY-OIL PAN(35ES-A180)	1	1	411 RL-UAK ,WRL-UAK	
	17	BWC00-00015	GASKET(35EA181)	1	1	411 RL-UAK ,WRL-UAK	
	18	BWC00-00016	PLUG-DRAIN(EA5033A)	1		411 RL-UAK ,WRL-UAK	
	19	BWD00-00017	ASSY-BOLT(EA5062)	15	1	411 RL-UAK ,WRL-UAK	
	20	BWC00-00018	MAGNET(8-199)	1	1	411 RL-UAK ,WRL-UAK	
	21	BWH00-00019	ASSY-CABLE(35EC-A284G)	1	1	411 RL-UAK ,WRL-UAK	
	22	BWK00-00019	ASSY-CABLE(35EC-A284H)	1	1	411 RL-UAK ,WRL-UAK	Y
	23	BWD00-00020	ASSY-LEVER,MANUAL VALVE DETENT(35EA-A78D)	1	1	411 RL-UAK ,WRL-UAK	
	24	BWD00-00021	SHAFT-MANUAL VALVE LEVER(35E-81B)	1	1	411 RL-UAK ,WRL-UAK	
	25	BWC00-00022	SPRING-MANUAL VALVE BIAS(35EA-85)	1		411 RL-UAK ,WRL-UAK	
	26	BWC00-00023	COLLAR(35EA-179A)	1	1	411 RL-UAK ,WRL-UAK	
	27	BWH00-00024	PIN-ROLL 1/8 X 11/16(EA5071)	1	1	411 RL-UAK ,WRL-UAK	
	28	BWC00-00025	PIN-ROLL 1/8 X(273337)	1		411 RL-UAK ,WRL-UAK	
	29	BWC00-00026	SPRING-MANUAL VALVE DETENT(35EA-83A)	1	1	411 RL-UAK ,WRL-UAK	
	30	BWC00-00027	BALL-3/8 DIA(453593)	1	1	411 RL-UAK ,WRL-UAK	
	31	BWH00-00028	TUBE-OIL COOLER INLET(35ES-297)	1	1	411 RL-UAK ,WRL-UAK	
	32	BWC00-00029	PAWL-PARKING BRAKE(35-268)	1		411 RL-UAK ,WRL-UAK	

Printed in Japan

REVISED: SEPTEMBER,1968

S	KEY NO.	PART NO.	PART NAME	QTY	SALES UNIT	MODEL	ICA
	33	BWC00-00030	LINK-TOGGLE(3-273)	1	1	411 RL-UAK ,WRL-UAK	
	34	BWC00-00031	PIN-TOGGLE LINK(3-275)	1	1	411 RL-UAK ,WRL-UAK	
	34-01	BWC0000032	SPRING-PARKING BRAKE RELEASE (8-271)	1		411 RL-UAK, WRL-UAK	
	34-02	BWD0000032	SPRING-PARKING BRAKE RELEASE (3-271)	1		411 RL-UAK, WRL-UAK	
	34-03	BWC0000033	LEVER-TOGGLE (3-272)	1		411 RL-UAK, WRL-UAK	
	34-04	BWA0000035	PIN-TOGGLE (3-274)	1		411 RL-UAK, WRL-UAK	
	34-05	BWC0000037	PIN-TOGGLE (35-276)	1		411 RL-UAK, WRL-FAK	
	34-06	BWC0000038	RING-"O" (4804P)	1		411 RL-UAK, WRL-UAK	
	34-07	BWC0000039	PIN-ROLL 5/32 (EA5004A)	1		411 RL-UAK, WRL-UAK	
	34-08	BWC0000040	PIN-PARKING BRAKE ANCHOR (35-269)	1		411 RL-UAK, WRL-UAK	
	34-09	BWC0000041	ASSY-LEVER, TOGGLE LIFT (3-A262)	1		411 RL-UAK, WRL-UAK	
	34-10	BWC0000042	SPRING-TOGGLE LEVER	1		411 RL-UAK WRL-UAK	
	35	BWC00-00043	LEVER-TORSION(3-261)	1		411 RL-UAK ,WRL-UAK	
	36	BWC00-00044	WASHER(3-321)	1		411 RL-UAK ,WRL-UAK	
	37	BWC00-00045	SPRING-RETAINING(4743A)	1		411 RL-UAK ,WRL-UAK	
	38	BWD00-00046	LINK-PARKING BRAKE(35E A-266A)	1	1	411 RL-UAK ,WRL-UAK	
	39	BWC00-00047	CLIP-ROD LINKAGE(4857A)	2	1	411 RL-UAK ,WRL-UAK	

Printed in Japan

REVISED: SEPTEMBER,1968

S	KEY NO.	PART NO.	PART NAME	Q'TY	SALES UNIT	MODEL	ICA
	40	31390-24500	COMP.-PIPE,OIL CHARGIN G	1		411 RL-UAK ,WRL-UAK	
*	41	31392-20200	COMP.-STICK,DRIP,OIL L EVEL	1		411 RL-UAK ,WRL-UAK	
	42	32703-73701	ASSY-PINION,SPEEDOMETE R(17T)	1	1	411 RL-UAK ,WRL-UAK	
	43	32710-14600	RING-"O", PINION SLEEVE	1		411 RL-UAK, WRL-UAK	
	44	31300-24500	ASSY-HOUSING, CONVERTER (TO E/# R-23006)	1		411 RL-UAK, WRL-UAK	
	45	31300-24500	ASSY-HOUSING, CONVERTER (FROM E/# R-23007)	1		411 RL-UAK, WRL-UAK	
	46	31317-71801	GUARD-STONE	2		411 RL-UAK, WRL-UAK	
	47	BWA00-00223	KIT-RUBBER RINGS & SEALS (35EE-500)	(1)		411 RL-UAK, WRL-UAK	
	48	BWC00-00221	KIT-GASKETS (35EA-501)	(1)		411 RL-UAK, WRL-UAK	
	49	BWB00-00237	KIT-OIL PAN (35ES-508) (INC. OIL PAN AND GASKET)	(1)		411 RL-UAK, WRL-UAK	
	50	BWA00-00225	KIT-TRANSMISSION CASE (35EZ-513) (INC. CASE, BUSH, CONNECTOR, PINS AND OIL SEAL)	(1)		411 RL-UAK, WRL-UAK	
	51	BWC00-00305	KIT-PARKING BRAKE (35EA-519) (INC. RELEASE SPRING AND TOGGLE PIN)	(1)		411 RL-UAK, WRL-UAK	
	52	BEC00-00305	KIT-MANUAL VALVE DETENT LEVER (35EA-521) (INC. SHAFT, LEVER AND PINS)	(1)		411 RL-UAK, WRL-UAK	

REVISED: SEPTEMBER,1966

Printed in Japan

NOTE

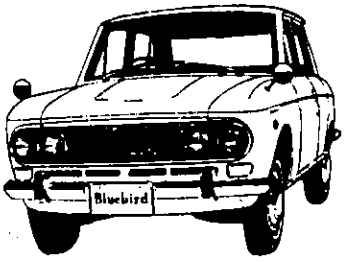

TRANSMISSION GEAR (AUTOMATIC)

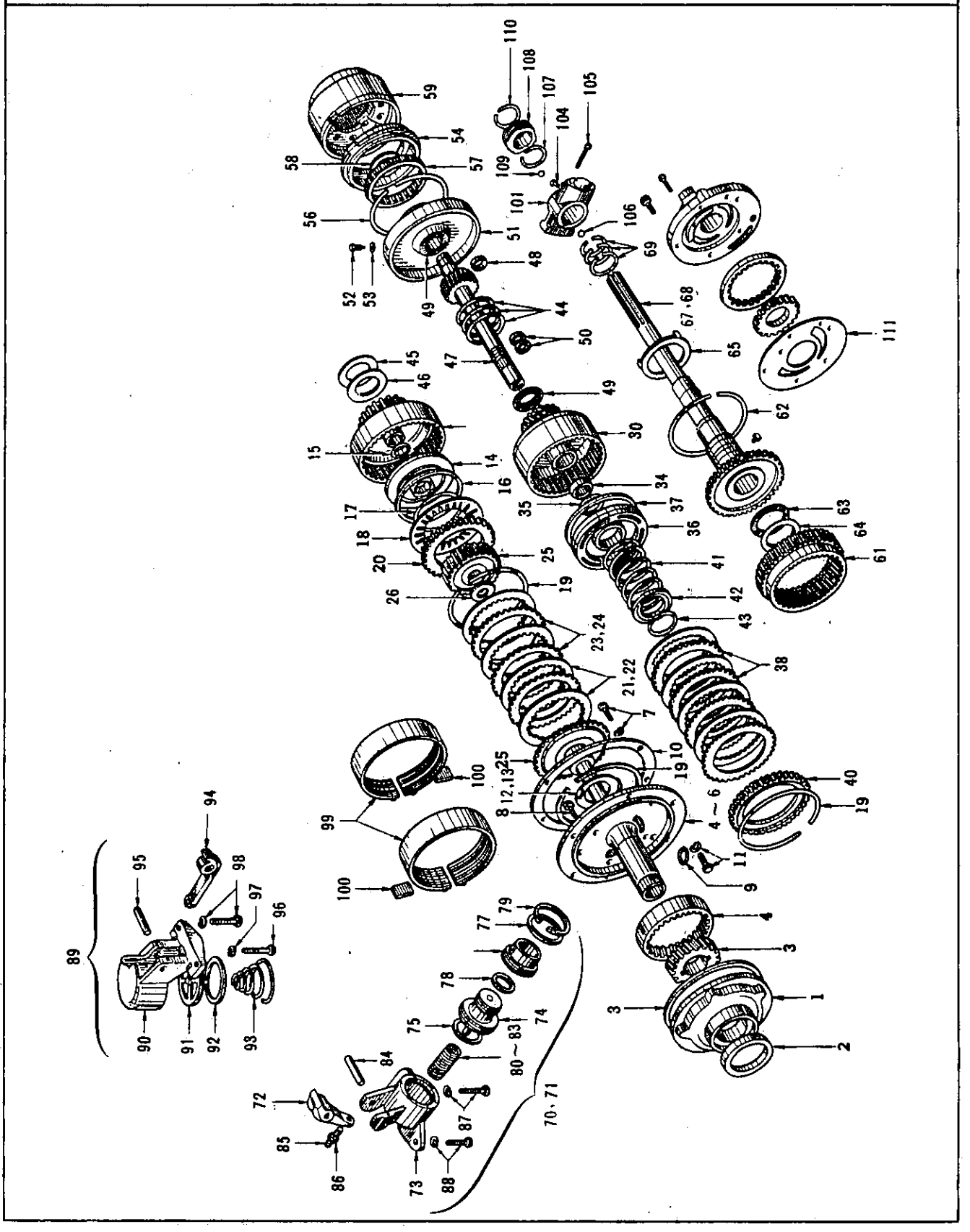

TRANSMISSION GEAR (AUTOMATIC)

S	KEY NO.	PART NO.	PART NAME	Q'TY	SALES UNIT	MODEL	ICA
	1	BWC00-00049	ASSY-PUMP,FRONT(35EA-1A60B)	1		411 RL-UAK ,WRL-UAK	
	2	BWC00-00052	SEAL-OIL FRONT PUMP(35EA-62A)	1	1	411 RL-UAK ,WRL-UAK	
	3	BWC00-00055	RING-"O",FRONT PUMP(EA4604D)	1	1	411 RL-UAK ,WRL-UAK	
*	4	BWC00-00056	ASSY-SUPPORT,PUMP ADAPTOR&CONVERTER(35EA-A3C)	1	1	411 RL-UAK ,WRL-UAK	
*	5	BWC00-00057	BUSH-SUPPORT REAR(35-14)	1	1	411 RL-UAK ,WRL-UAK	
*	6	BWC00-00058	BUSH-SUPPORT FRONT(35-23)	1		411 RL-UAK ,WRL-UAK	
	7	BWC00-00059	SCREW(443609)	5		411 RL-UAK ,WRL-UAK	
	8	BWC00-00060	SCREW(190601)	1	1	411 RL-UAK ,WRL-UAK	
	9	BWC00-00061	RING-"O",PUMP INLET TUBE(48400)	1	5	411 RL-UAK ,WRL-UAK	
	10	BWC00-00062	GASKET-SUPPORT,PUMP ADAPTOR&CONVERTER(35-61)	1	1	411 RL-UAK ,WRL-UAK	
	11	BWC00-00059	SCREW(443609)	6		411 RL-UAK ,WRL-UAK	
	12	BWC00-00064	WASHER-INPUT SHAFT THRUST(35-15B)	1	1	411 RL-UAK ,WRL-UAK	
*	13	NOT - SALE	WASHER-INPUT SHAFT THRUST(35-15C)	1		411 RL-UAK ,WRL-UAK	
	14	BWC00-00066	ASSY-PISTON&REED,FRONT CLUTCH(35EA-A35)	1		411 RL-UAK ,WRL-UAK	
	15	BWC00-00068	RING-"O",PISTON INSIDE(EA4804E)	1	1	411 RL-UAK ,WRL-UAK	

REVISED: SEPTEMBER,1968

Printed in Japan

S	KEY NO.	PART NO.	PART NAME	Q'TY	SALES UNIT	MODEL	ICA
	16	BWC00-00069	RING-SEALING PISTON OUTSIDE(4805C)	1		411 RL-UAK ,WRL-UAK	
	17	BWC00-00070	RING-SPRING,BEARING FRONT CLUTCH(35-33)	1	1	411 RL-UAK ,WRL-UAK	
	18	BWC00-00071	SPRING-FRONT CLUTCH(35-37)	3		411 RL-UAK ,WRL-UAK	
	19	BWC00-00072	RING-SNAP,FRONT CLUTCH SPRING(4763D)	1	1	411 RL-UAK ,WRL-UAK	
*	20	BWC00-00073	PLATE-PRESSURE,FRONT CLUTCH(35EA-175B)	1	1	411 RL-UAK ,WRL-UAK	
*	21	BWC00-00075	ASSY-PLATE,INNER(35A-166)	4	1	411 RL-UAK ,WRL-UAK	
*	22	BWD00-00075	ASSY-PLATE,INNER(35EA-A166A)	4	1	411 RL-UAK ,WRL-UAK	
*	23	BWC00-00076	PLATE-FRONT CLUTCH OUTER(35-65)	3	1	411 RL-UAK ,WRL-UAK	
*	24	BWC00-00077	PLATE-FRONT CLUTCH OUTER(35EA-65)	3		411 RL-UAK ,WRL-UAK	
	25	BWC00-00078	HUB-FRONT CLUTCH(35-40)	1	1	411 RL-UAK ,WRL-UAK	
	26	BWC00-00079	WASHER-THRUST,FRONT CLUTCH HUB(35-17)	1	1	411 RL-UAK ,WRL-UAK	
*	27	BWC00-00080	WASHER-THRUST,FRONT CLUTCH HUB(35-17A)	1		411 RL-UAK ,WRL-UAK	
	28	BWC00-00081	ASSY-SHAFT&BUSH,INPUT(35-A16)	1	1	411 RL-UAK ,WRL-UAK	
*	29	BWC00-00082	BUSH-INPUT SHAFT(35-9)	1	1	411 RL-UAK ,WRL-UAK	
*	30	BWC00-00083	ASSY-DRUM,FRONT(35EG-1A50)	1	5	411 RL-UAK ,WRL-UAK	
	31	BWC00-00084	KEY-WOODRUFF(218217)	1	1	411 RL-UAK ,WRL-UAK	
*	32	BWC00-00085	ASSY-GEAR,REVERSE SUN(35-A4)	1	1	411 RL-UAK ,WRL-UAK	

Printed in Japan

REVISED: SEPTEMBER,1968

S	KEY NO.	PART NO.	PART NAME	Q'TY	SALES UNIT	MODEL	ISS
*	33	BWC00-00087	BUSH-REVERSE SUN GEAR(35-12A)	1	1	411 RL-UAK ,WRL-UAK	
	34	BWC00-00088	BEARING-NEEDLE ROLLER(4848L)	1		411 RL-UAK ,WRL-UAK	
	35	BWC00-00089	RING-"O",PISTON INSIDE (4804S)	1		411 RL-UAK ,WRL-UAK	
	36	BWC00-00090	ASSY-PISTON&REED,REAR CLUTCH(35EP-A45)	1		411 RL-UAK ,WRL-UAK	
	37	BWC00-00091	RING-SEALING,PISTON OUTSIDE(4805E)	1	1	411 RL-UAK ,WRL-UAK	
*	38	BWC00-00092	PLATE-REAR CLUTCH OUTER(35-165)	4	1	411 RL-UAK WRLUAK	
	39	BWC00-00038	LATE-REAR CLUTCH OUTER (35EA-165) WPL411-UT-8124 10)	5		411 RL-UAK ,WRL-UAK	
*	40	BWC00-00095	PLATE-PRESSURE,REAR CLUTCH(35-67)	1	1	411 RL-UAK ,WRL-UAK	
	41	BWC00-00097	SPRING-REAR CLUTCH(35-67)	1		411 RL-UAK ,WRL-UAK	
	42	BWC00-00098	SEAT-REAR CLUTCH SPRING(35-48)	1	1	411 RL-UAK ,WRL-UAK	
	43	BWC00-00099	RING-SNAP(4653E)	1		411 RL-UAK ,WRL-UAK	
	44	BWC00-00100	RING-OIL SEAL(4806M)	3		411 RL-UAK ,WRL-UAK	
	45	BWC00-00101	WASHER-FRONT CLUTCH CYL.THRUST STEEL(35-21)	1		411 RL-UAK ,WRL-UAK	
	46	BWC00-00102	WASHER-FRONT CLUTCH CYL.THRUST BRONZE(35-15)	1		411 RL-UAK ,WRL-UAK	
	47	BWC00-00103	ASSY-GEAR,FORWARD SUN(35-1A104)	1	2	411 RL-UAK ,WRL-UAK	
	48	BWC00-00104	RING-OIL SEALING(4806P)	1		411 RL-UAK ,WRL-UAK	
	49	BWC00-00105	BEARING-NEEDLE THRUST(4830B)	2	2	411 RL-UAK ,WRL-UAK	

Printed in Japan

REVISED: SEPTEMBER,1968

S	KEY NO.	PART NO.	PART NAME	Q'TY	SALES UNIT	MODEL	ICA
	50	BWC00-00106	RING-OIL SEALING(4806L)	2		411 RL-UAK ,WRL-UAK	
	51	BWH00-00107	ASSY-CENTER SUPPORT&PLUG(35FC-A75)	1	1	411 RL-UAK ,WRL-UAK	
	52	BWC00-00108	SCREW-CENTER SUPPORT(4626X)	2		411 RL-UAK ,WRL-UAK	
	53	BWC00-00109	WASHER-LOCK(X2978DR)	2		411 RL-UAK ,WRL-UAK	
	54	BWC00-00110	ASSY-RACE O.W.C.OUTER(35-A148)	1	1	411 RL-UAK ,WRL-UAK	
*	55	BWC00-00111	BUSH-O.W.C.OUTER(35-13)	1		411 RL-UAK ,WRL-UAK	
	56	BWC00-00072	RING-SNAP O.W.C.OUTER RACE(4763D)	1	1	411 RL-UAK ,WRL-UAK	
	57	BWC00-00113	ASSY-O.W.C.(35-A275)	1	2	411 RL-UAK ,WRL-UAK	
	58	BWC00-00114	PLATE-BEARING NEEDLE THRUST(35-20B)	1		411 RL-UAK ,WRL-UAK	
*	59	BWC00-00115	ASSY-PLANET(35EA-1A150A)	1		411 RL-UAK ,WRL-UAK	
*	60	BWC00-00087	BUSH-PLANET COVER(35-12A)	1	1	411 RL-UAK ,WRL-UAK	
	61	BWC00-00118	GEAR-RING(35-6)	1		411 RL-UAK ,WRL-UAK	
	62	BWC00-00119	RING-SNAP(4763A)	1		411 RL-UAK ,WRL-UAK	
	63	BWC00-00122	BEARING-NEEDLE THRUST(4830C)	1	1	411 RL-UAK ,WRL-UAK	
	64	BWC00-00123	PLATE-BEARING NEEDLE THRUST(35-20A)	1		411 RL-UAK ,WRL-UAK	
	65	BWD00-00124	WASHER-THRUST DRIVE SHAFT(35EA-159)	1	1	411 RL-UAK ,WRL-UAK	
*	66	BWE00-00124	WASHER-THRUST DRIVE SHAFT(35EA-159A)	1	1	411 RL-UAK ,WRL-UAK	

Printed in Japan

REVISED: SEPTEMBER,1968

S	KEY NO.	PART NO.	PART NAME	Q'TY	SALES UNIT	MODEL	ICA
	67	BWB00-00125	ASSY-BUSH&PLUG,DRIVER SHAFT(35EC-1A2C)	1	1	411 RL-UAK ,WRL-UAK	
*	68	BWC00-00126	BUSH-DRIVER SHAFT(35-29)	1	5	411 RL-UAK ,WRL-UAK	
	69	BWC00-00127	RING-OIL SEALING(4806N)	3		411 RL-UAK ,WRL-UAK	
	70	BWB00-00128	ASSY-SERVO,FRONT(35EA-A120)	1	1	411 RL-UAK ,WRL-UAK	
	71	BWD00-00128	ASSY-SERVO,FRONT(35EA-A120A)	1	1	411 RL-UAK ,WRL-UAK	Y
	72	BWC00-00129	LEVER-FRONT SERVO(35EA-127)	1		411 RL-UAK ,WRL-UAK	
	73	BWB00-00130	BODY-FRONT SERVO(35EA-120A)	1	1	411 RL-UAK ,WRL-UAK	
	74	BWB00-00131	PISTON-FRONT SERVO(35EA-515)	1	1	411 RL-UAK ,WRL-UAK	
	75	BWB00-00132	RING-"O"(EA4804B)	1	1	411 RL-UAK ,WRL-UAK	
	76	BWB00-00133	SLEEVE-FRONT SERVO(35EA-119)	1	1	411 RL-UAK ,WRL-UAK	
	77	BWC00-00134	RING-OIL SEALING(EA-4805A)	1	1	411 RL-UAK ,WRL-UAK	
	78	BWC00-00135	RING-"O"(EA-4804C)	1	1	411 RL-UAK ,WRL-UAK	
	79	BWB00-00136	RING-SNAP(EA4763A)	1	1	411 RL-UAK ,WRL-UAK	
	80	BWC00-00137	SPRING-FRONT SERVO(5AB125)	1		411 RL-UAK ,WRL-UAK	
	81	BWE00-00137	SPRING-FRONT SERVO(5AB 125A)	1		411 RL-UAK ,WRL-UAK	Y
*	82	BWC00-00138	SPRING-FRONT SERVO(35EA-125)	1		411 RL-UAK ,WRL-UAK	
	83	BWE00-00138	SPRING-FRONT SERVO(35EA-125A)	1	1	411 RL-UAK ,WRL-UAK	Y

Printed in Japan

REVISED: SEPTEMBER,1968

S	KEY NO.	PART NO.	PART NAME	Q'TY	SALES UNIT	MODEL	ICA
	84	BWD00-00139	PIN-LEVER PIVOT(35-118B)	1	1	411 RL-UAK ,WRL-UAK	
	85	BWC00-00140	SCREW-SERVO ADJUSTING(4626W)	1		411 RL-UAK ,WRL-UAK	
	86	BWC00-00141	NUT 3/8-16(114503)	1	1	411 RL-UAK ,WRL-UAK	
	87	BWC00-00143	BOLT(EA-4626F)	1		411 RL-UAK ,WRL-UAK	
	88	BWC00-00013	BOLT(431922)	1	1	411 RL-UAK ,WRL-UAK	
	89	BWH00-00145	ASSY-SERVO,REAR(35EA-1A130A)	1	1	411 RL-UAK ,WRL-UAK	
	90	BWH00-00146	BODY-REAR SERVO(35EA-130A)	1	1	411 RL-UAK ,WRL-UAK	
	91	BWD00-00147	PISTON-REAR SERVO(35-131A)	1	1	411 RL-UAK ,WRL-UAK	
	92	BWC00-00148	RING-"O"(4804U)	1	1	411 RL-UAK ,WRL-UAK	
	93	BWC00-00149	SPRING-SERVO(35-135A)	1		411 RL-UAK ,WRL-UAK	
	94	BWC00-00150	LEVER-REAR SERVO(35-137)	1		411 RL-UAK ,WRL-UAK	
	95	BWC00-00151	PIN-LEVER PIVOT(35-118A)	1		411 RL-UAK ,WRL-UAK	
	96	BWC00-00152	SCREW-REAR SERVO(4626V)	1		411 RL-UAK ,WRL-UAK	
	97	BWC00-00153	WASHER-LOCK(103321)	1		411 RL-UAK ,WRL-UAK	
	98	BWD00-00154	BOLT(EA5023B)	1	1	411 RL-UAK ,WRL-UAK	
	99	BWC00-00157	ASSY-BAND,BRAKE(35EG-1A155)	2		411 RL-UAK ,WRL-UAK	
	100	BWC00-00158	STRUT-SERVO(35-156C)	2		411 RL-UAK ,WRL-UAK	

Printed in Japan

REVISED: SEPTEMBER,1968

S	KEY NO.	PART NO.	PART NAME	Q'TY	SALES UNIT	MODEL	ICA
	101	BWD00-00159	ASSY-GOVERNOR(35EN-A95)	2	1	411 RL-UAK ,WRL-UAK	
	102	BWC00-00160	SPRING-GOVERNOR(35EA-99A)	1		411 RL-UAK ,WRL-UAK	
*	103	BWC00-00161	SPRING-GOVERNOR(35EA-99B)	1		411 RL-UAK ,WRL-UAK	
	104	BWC00-00162	SCREW(X2380BL)	2		411 RL-UAK ,WRL-UAK	
	105	BWC00-00163	SCREW(FA4626A)	1		411 RL-UAK ,WRL-UAK	
	106	BWC00-00164	BALL-1/4 DIA(147485)	1		411 RL-UAK ,WRL-UAK	
	107	BWC00-00099	RING-GOVERNOR SNAP(4653E)	1		411 RL-UAK ,WRL-UAK	
	108	32701-73700	GEAR-SPEEDOMETER DRIVE (5T)	1	1	411 RL-UAK ,WRL-UAK	
	109	BWC00-00166	BALL-3/16 DIA(147483)	1	1	411 RL-UAK ,WRL-UAK	
	110	BWD00-00167	RING-SNAP,SPEEDOMETER DRIVE(4686A)	1	1	411 RL-UAK ,WRL-UAK	
	111	BWC00-00168	PLATE-REAR PUMP(35EA-162)	1	1	411 RL-UAK ,WRL-UAK	
*	112	BWC00-00169	PLATE-REAR PUMP(32-162)	1	1	411 RL-UAK ,WRL-UAK	
	113	BWC00-00224	KIT-OIL RINGS,SEALING(35EC-503)(INC.4 ITEMS)	1		411 RL-UAK ,WRL-UAK	
	114	BWD00-00222	KIT-THRUST WASHERS(35EA-504-1)(INC.15 ITEMS)	1	1	411 RL-UAK ,WRL-UAK	
	115	BWC00-00229	KIT-CLUTCH PLATES,FRONT(35EA-505-1)(INC.7 ITEMS)	1		411 RL-UAK ,WRL-UAK	
	116	BWC00-00230	KIT-CLUTCH PLATES,REAR(35EE-506-1)(INC.8 ITEMS)	1		411 RL-UAK ,WRL-UAK	

REVISED: SEPTEMBER,1968

Printed in Japan

S	KEY NO.	PART NO.	PART NAME	Q'TY	SALES UNIT	MODEL	ICA
	117	BWC00-00241	KIT-REAR PUMP(35EA-507)(INC.PUMP HOUSING AND GEARS)	1	1	411 RL-UAK ,WRL-UAK	
	118	BWC00-00231	KIT-GOVERNOR(35EN-510)(INC.GOVERNOR BODY,VALVE.SPRINGS,RETAINER AND PLATE)	1		411 RL-UAK ,WRL-UAK	
	119	BWC00-00278	KIT-FRONT DRUM(35EG-514)(INC.DRUM AND BEARING)	1		411 RL-UAK ,WRL-UAK	
	120	BWB00-00302	KIT-PISTON,FRONT SERVO (35EA-515)	1	1	411 RL-UAK ,WRL-UAK	
	121	BWC00-00303	KIT-REAR DRUM(35EA-517)(INC.PLATE COVER,GEAR AND DRUM)	1	1	411 RL-UAK ,WRL-UAK	
	122	BWC00-00240	KIT-FRONT PUMP(35EA-511-1)(INC.PUMP,TUBE AND O-RING)	1		411 RL-UAK ,WRL-UAK	

Printed in Japan

REVISED: SEPTEMBER.1968

NOTE

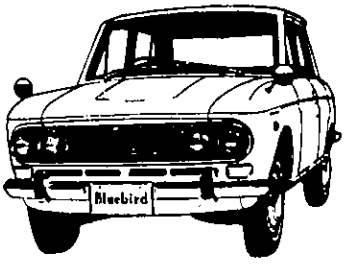

TRANSMISSION VALVE BODIES (AUTOMATIC)

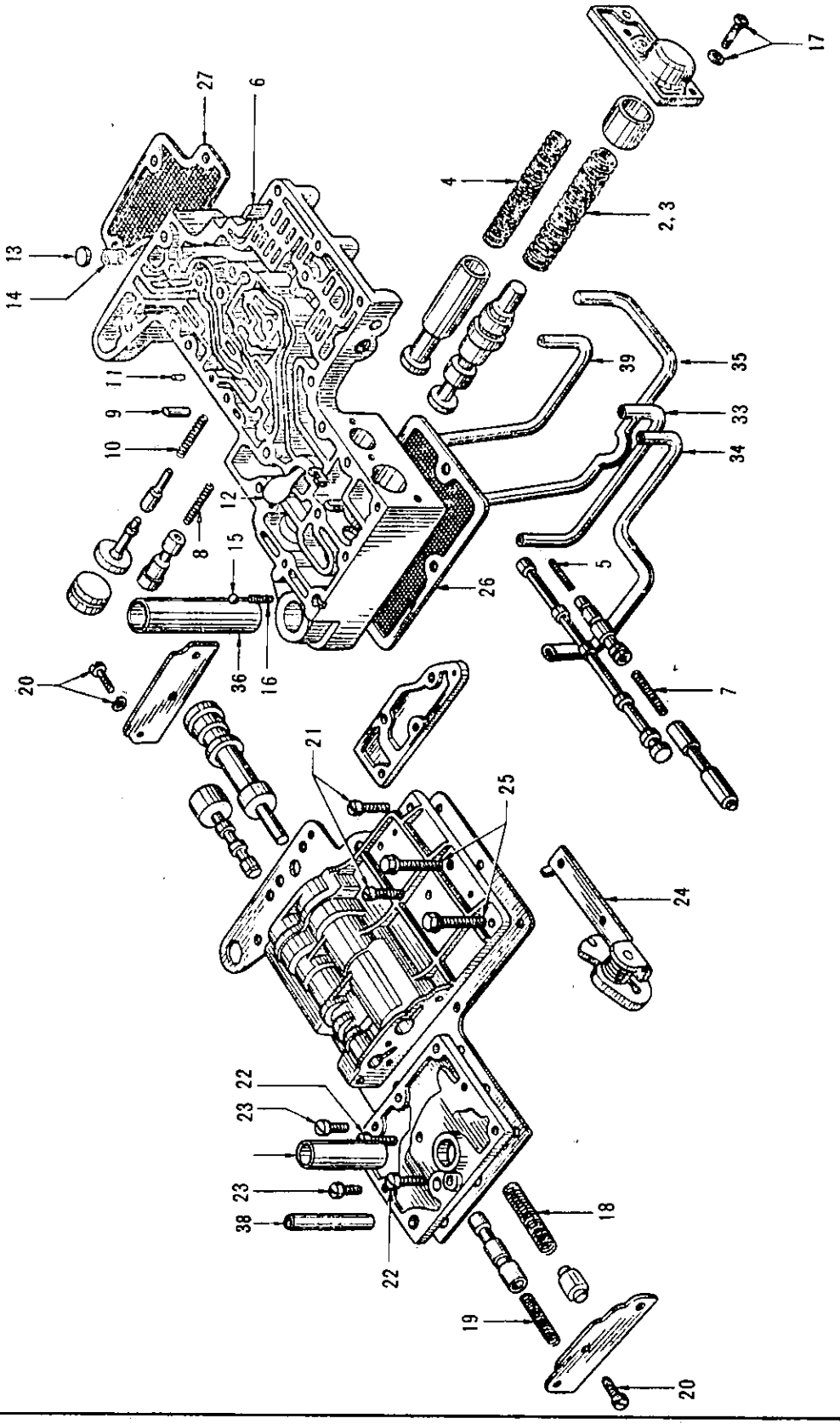

S	KEY NO.	PART NO.	PART NAME	Q'TY	SALES UNIT	MODEL	ICA
			TRANSMISSION VALVE BODIES (AUTOMATIC)				
	1	BWB00-00177	ASSY-VALVE BODIES(35EX -1A200)	1	1	411 RL-UAK ,WRL-UAK	
	2	BWC00-00179	SPRING-REGULATOR VALVE (P)(35EA-247)	1	1	411 RL-UAK ,WRL-UAK	
*	3	BWD00-00179	SPRING-REGULATOR VALVE (P)(35EA-247A)	1	1	411 RL-UAK ,WRL-UAK	
	4	BWC00-00180	SPRING-REGULATOR VALVE (S)(35EA-246A)	1	1	411 RL-UAK ,WRL-UAK	
	5	BWC00-00181	SPRING-THROTTLE VALVE(35-208)	1	1	411 RL-UAK ,WRL-UAK	
	6	BWC00-00183	STOP-THROTTLE VALVE(35 EA-249)	1	1	411 RL-UAK ,WRL-UAK	
	7	BWC00-00184	SPRING-THROTTLE RETURN (35-238)	1	1	411 RL-UAK WRL-UAK	
*	8	BWE00-00186	SPRING-SERVO ORIFICE C ONTROL(35-296) M)	1	1	411 RL-UAK ,WRL-UAK	
	9	BWC00-00187	STOP-ORIFICE CONTROL V ALVE(35-291)	1	1	411 RL-UAK ,WRL-UAK	
	10	BWC00-00188	SPRING-MODULATOR VALVE (35-212)	1	1	411 RL-UAK ,WRL-UAK	
	11	BWC00-00190	PIN-DOWEL(35-499)	1	1	411 RL-UAK ,WRL-UAK	
	12	BWC00-00191	VALVE-PUMP CHECK,FRONT (35EA 129A)	1	1	411 RL-UAK ,WRL-UAK	
	13	BWC00-00192	VALVE-PUMP CHECK,REAR(35-229)	1	1	411 RL-UAK ,WRL-UAK	
	14	BWC00-00193	SPRING-PUMP CHECK VALV E,REAR(35-252)	1		411 RL-UAK ,WRL-UAK	
	15	BWC00-00164	BALL-1/4 DIA,STEEL(147 485)	1		411 RL-UAK ,WRL-UAK	

REVISED: SEPTEMBER,1968

Printed in Japan

S	KEY NO.	PART NO.	PART NAME	Q'TY	SALES UNIT	MODEL	ICA
	16	BWC00-00196	SPRING-CONVERTER CHECK VALVE(5-113)	1	1	411 RL-UAK ,WRL-UAK	
	17	BWC00-00197	SCREW(193445)	3	1	411 RL-UAK ,WRL-UAK	
	18	BWC00-00198	SPRING-2-3 SHIFT VALVE ,INNER(35EA-223)	1	1	411 RL-UAK ,WRL-UAK	
	19	BWC00-00199	SPRING-1-2 SHIFT VALVE (35EA-256A)	1		411 RL-UAK ,WRL-UAK	
	20	BWC00-00201	SCREW(189386)	6		411 RL-UAK ,WRL-UAK	
	21	BWC00-00060	SCREW(190601)	2	1	411 RL-UAK ,WRL-UAK	
	22	BWC00-00204	SCREW(443914)	2		411 RL-UAK ,WRL-UAK	
	23	BWC00-00205	SCREW(451614)	6		411 RL-UAK ,WRL-UAK	
	24	BWC00-00206	ASSY-CAM,DOWN SHIFT VALVE(35EA-A283D)	1		411 RL-UAK ,WRL-UAK	
	25	BWC00-00207	SCREW(EA-46261)	2		411 RL-UAK ,WRL-UAK	
	26	BWC00-00208	STRAINER-OIL PUMP,FRONT(35-A190)	1		411 RL-UAK ,WRL-UAK	
	27	BWC00-00209	STRAINER-OIL PUMP,REAR (35-A98)	1	10	411 RL-UAK ,WRL-UAK	
	28	BWC00-00201	SCREW 10-24X1(189386)	7		411 RL-UAK ,WRL-UAK	
	29	BWC00-00210	SCREW(453907)	4		411 RL-UAK ,WRL-UAK	
	30	BWC00-00203	SCREW 10-24X-1 3/8(273181)	3		411 RL-UAK ,WRL-UAK	
	31	BWC00-00212	BOLT(EA-4626C)	1		411 RL-UAK ,WRL-UAK	
	32	BWB00-00213	BOLT(EB5053)	2	1	411 RL-UAK ,WRL-UAK	

Printed in Japan

REVISED: SEPTEMBER,1968

S	KEY NO.	PART NO.	PART NAME	Q'TY	SALES UNIT	MODEL	ICA
	33	BWB00-00214	TUBE-SERVO APPLY, FRONT (35-185)	1	1	411 RL-UAK, WRL-UAK	
	34	BWB0000215	TUBE-SERVO RELEASE, FRONT (35-186)	1		411 RL-UAK, WRL-UAK	
	35	BWB0000216	TUBE-CLUTCH, REAR (35-86)	1		411 RL-UAK, WRL-UAK	
	36	BWC0000217	TUBE-FRONT PUMP OUTLET (35-89)	1		411 RL-UAK, WRL-UAK	
	37	BWC0000218	TUBE-FRONT PUMP INLET (35-87A)	1		411 RL-UAK, WRL-UAK	
	38	BWC0000219	TUBE-CONVERTER, IN AND OUT (35-88)	1		411 RL-UAK, WRL-UAK	
	39	BWB0000220	TUBE-SERVO, REAR (35-91)	1		411 RL-UAK, WRL-UAK	
	40	BWB00-00228	KIT-SPRINGS, VALVE BODY (35EA-512) (INC. 16 SPRINGS)	(1)		411 RL-UAK, WRL-UAK	

Printed in Japan

REVISED: SEPTEMBER, 1968

NOTE

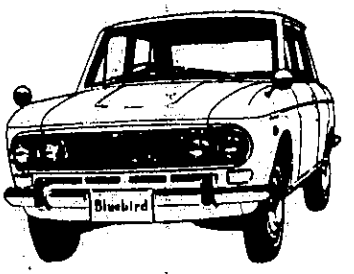

NOTE

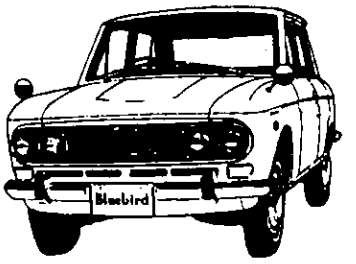

PROPELLER SHAFT (TO SEP-65)

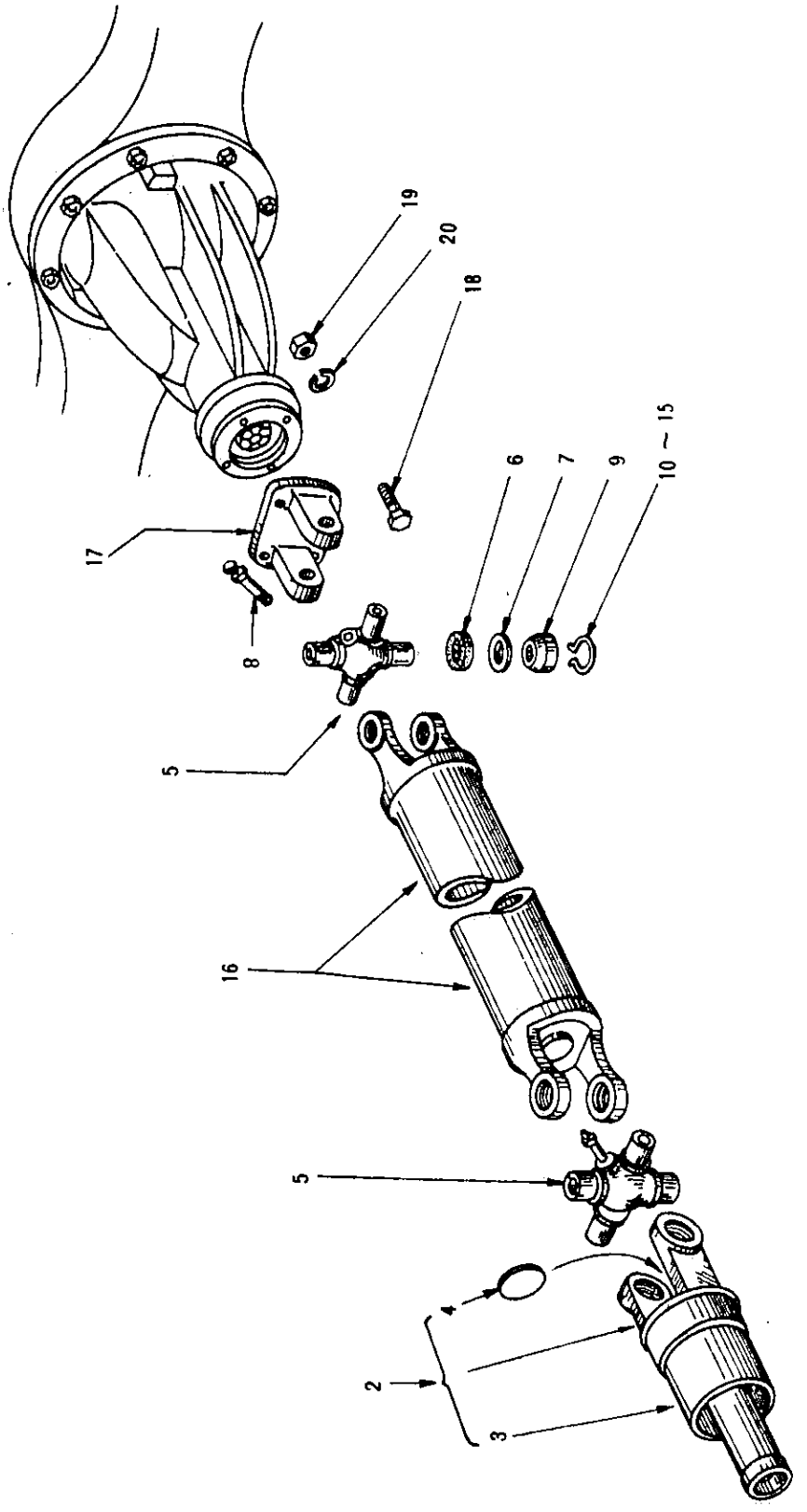

PROPELLER SHAFT (TO SEP-65)

S	KEY NO.	PART NO.	PART NAME	QTY	SALES UNIT	MODEL	ICA
	1	37000-16500	ASSY-SHAFT,PROPELLER,WITH JOINT(TO SEP-65)	1		411	
	2	37111-16500	ASSY-YOKE,SLEEVE(TO SEP-65)	1		411	
	3	37219-26760	COVER-DUST(TO SEP-65)	1		411	
	4	37113-26760	PLUG-SLEEVE YOKE(TO SEP-65)	1		411	
	5	37126-11960	JOURNAL(TO SEP-65)	2		411	
	6	37133-11960	RETAINER-BEARING,OIL SEAL(TO SEP-65)	8	50	411	
	7	37134-11960	SEAL-OIL(TO SEP-65)	8		411	
*	8	37138-36800	NIPPLE(TO SEP-65)	2	50	411	
	9	37130-11960	ASSY-BEARING(TO SEP-65)	8		411	
	10	37148-08000	RING-SNAP(1.54T)(TO SEP-65)	8		411	
	11	37149-08000	RING-SNAP(1.51T)(TO SEP-65)	8		411	
	12	37150-08000	RING-SNAP(1.48T)(TO SEP-65)	8		411	
	13	37151-08000	RING-SNAP(1.45T)(TO SEP-65)	8		411	
	14	37152-08000	RING-SNAP(1.57T)(TO SEP-65)	8		411	
	15	37153-08000	RING-SNAP(1.60T)(TO SEP-65)	8		411	
	16	37210-10600	ASSY-SHAFT,PROPELLER(TO SEP-65)	1		411	
	17	37117-11960	YOKE-FLANGE(TO SEP-65)	1		411	

REVISED: SEPTEMBER,1968

Printed in Japan

PROPELLER SHAFT (FROM OCT-65)

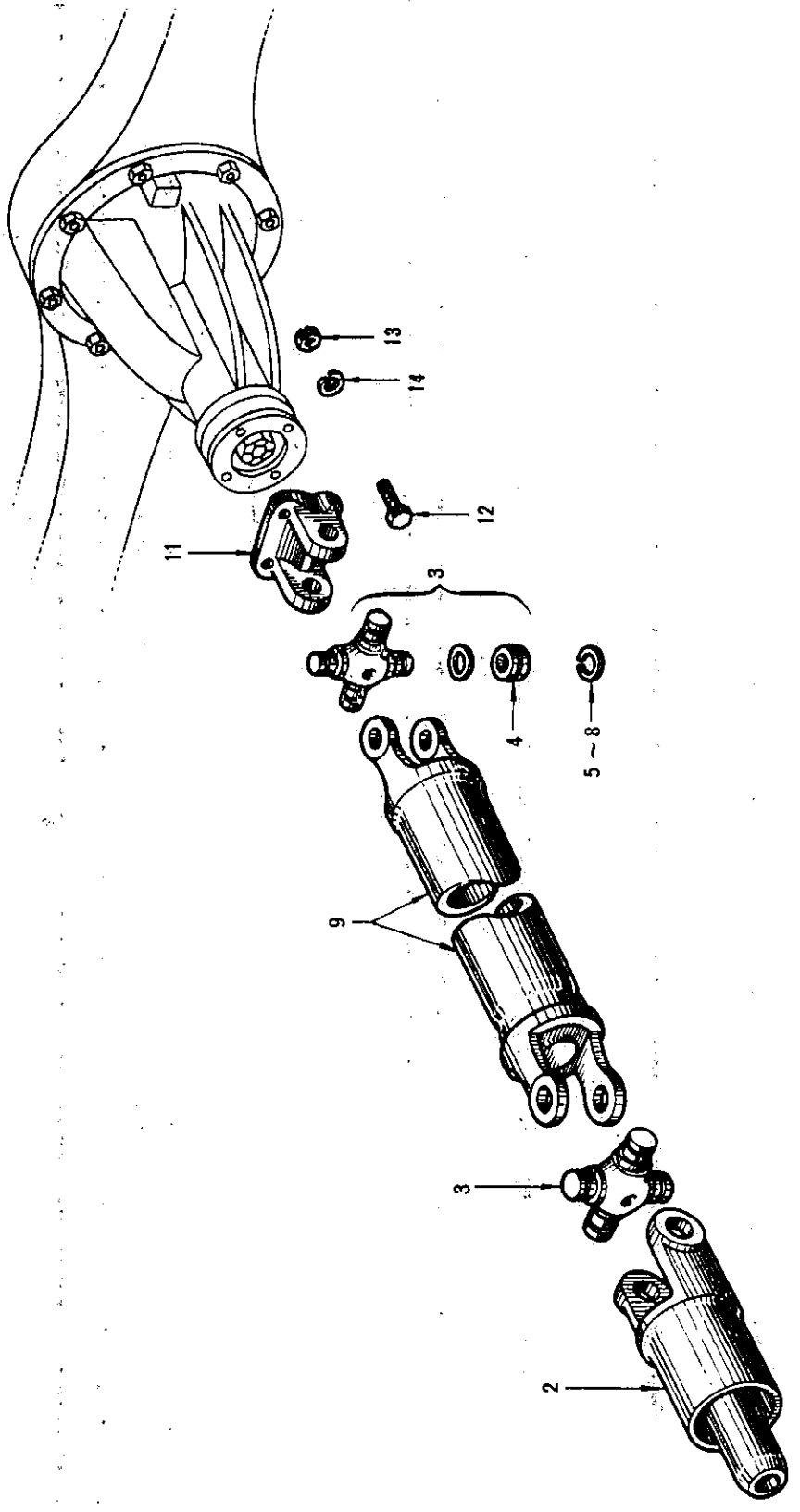

NOTE

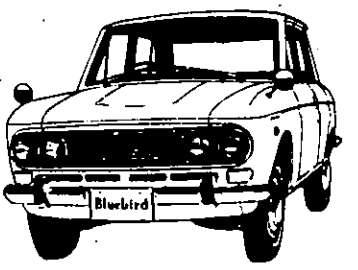

S	KEY NO.	PART NO.	PART NAME	Q'TY	SALES UNIT	MODEL	ICA
	18	00124-52210	BOLT(TO SEP-65)TO FIX FLANGE YOKE TO COMPANI ON FLANGE	4	50	411	
	19	00911-24510	NUT(TO SEP-65)TO FIX F LANGE YOKE TO COMPANIO N FLANGE	4	100	411	
	20	00915-21510	WASHER-LOCK(TO SEP-65) TO FIX FLANGE YOKE TO COMPANION FLANGE	4		411	
	21	37125-11975	KIT-REPAIR,JOURNAL CEN TER(INC.4,5,6,7,8,9)(T O SEP-65)	1		411	

Printed in Japan

REVISED: SEPTEMBER,1968

S	KEY NO.	PART NO.	PART NAME			MODEL	ICA
			PROPELLER SHAFT (FROM OCT-65)				
	1	37000-24500	ASSY-SHAFT,PROPELLER,WITH JOINT(FROM OCT-65)	1		1.6L 411	
	2	37111-14600	ASSY-YOKE,SLEEVE(FROM OCT-65)	1		411	
*	3	37125-14600	ASSY-JOURNAL,WITH BEARING(FROM OCT-65)	2		411	
*	4	37130-14600	ASSY-BEARING RACE(FROM OCT-65)	8		411	
	5	37146-14600	RING-SNAP,ADJUSTING(2.00T)(FROM OCT-65)	8		411	
	6	37147-14600	RING-SNAP,ADJUSTING(2.02T)(FROM OCT-65)	8		411	
	7	37148-14600	RING-SNAP,ADJUSTING(2.04T)(FROM OCT-65)	8		411	
	8	37149-14600	RING-SNAP,ADJUSTING(2.06T)(FROM OCT-65)	8		411	
	9	37210-16500	ASSY-SHAFT,PROPELLER(FROM OCT-65)	1	1	411(EXC. 1.6L)	
	10	37210-24500	ASSY-SHAFT,PROPELLER(FROM OCT-65)	1		1.6L 411	
	11	37117-14600	YOKE-FLANGE(FROM OCT-65)	1		411	
	12	00124-52510	BOLT(FROM OCT-65)TO FIX PROPELLER SHAFT TO COMPANION FLANGE	4	50	411	
	13	00911-24510	NUT(FROM OCT-65)TO FIX PROPELLER SHAFT TO COMPANION FLANGE	4	100	411	
	14	00915-21510	WASHER-LOCK(FROM OCT-65)TO FIX PROPELLER SHAFT TO COMPANION FLANGE	4		411	

Printed in Japan

REVISED: SEPTEMBER,1968

NOTE

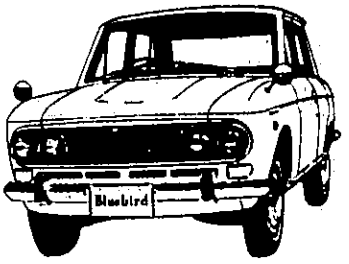

NOTE

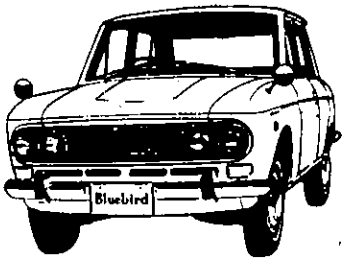

GEAR CARRIER

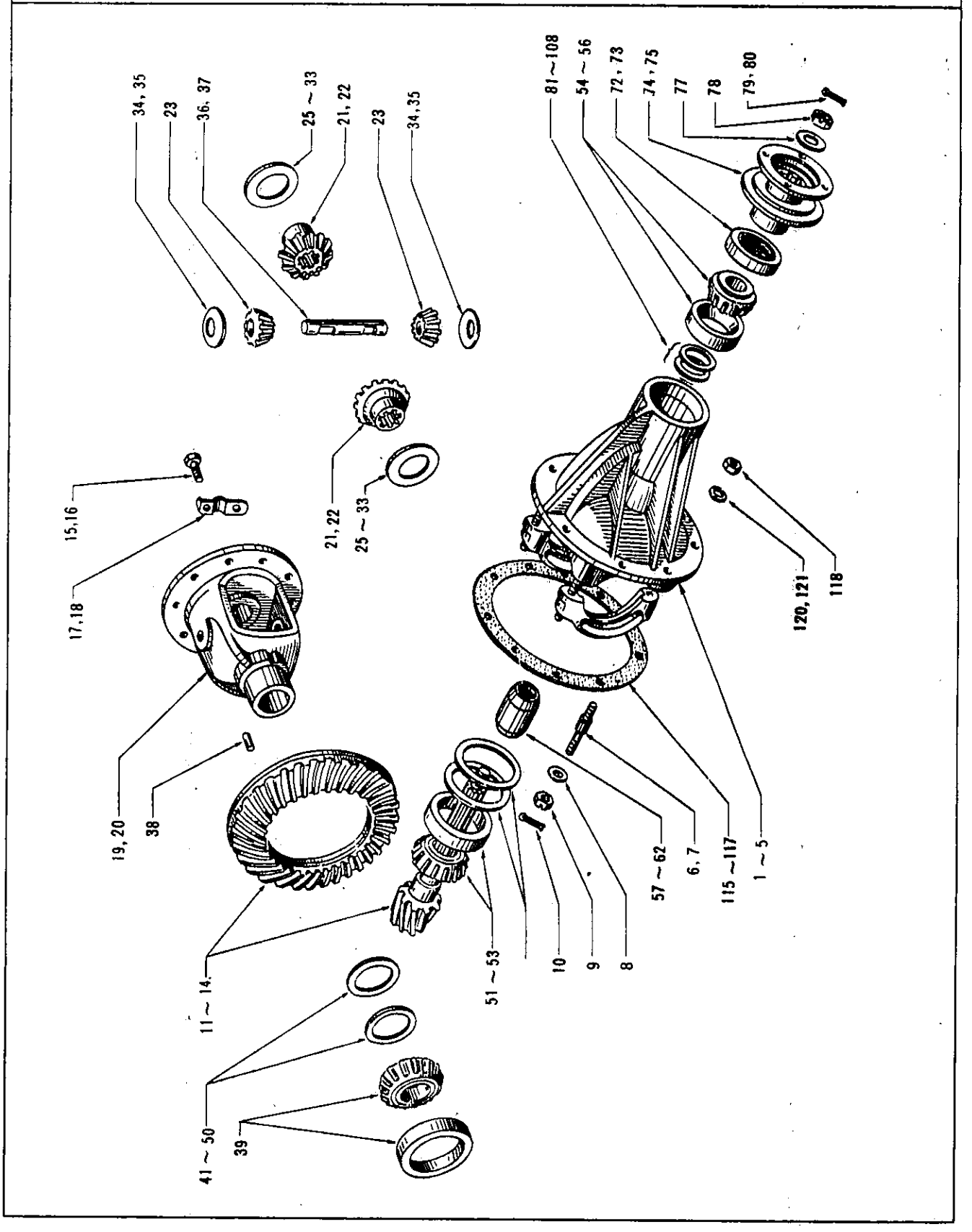

S	KEY NO.	PART NO.	PART NAME	Q'TY	SALES UNIT	MODEL	ICA
			GEAR CARRIER				
	1	38300-13200	ASSY-CARRIER,WITH GEAR (35T:8T)	1	1	U,LU,WU, WLU 411	
	2	38300-14300	ASSY-CARRIER,WITH GEAR (37T:9T)	1	1	UT,LUT,WUT ,WLUT,UTK 411	
	3	38300-15801	ASSY-CARRIER,WITH GEAR (35T:9T)	1	1	1.6L 411	
	4	38310-13201	ASSY-CARRIER,GEAR	1	1	1.3L 411	
	5	38310-75000	ASSY-CARRIER,GEAR	1		1.6L 411	
*	6	38315-01302	STUD-DIFFERENTIAL BEARING CUP	4	10	411	
	7	38315-13200	STUD-DIFFERENTIAL BEARING CUP	4	10	411	Y
	8	00915-41610	WASHER-PLAIN TO STUD	4		411	
	9	00911-84600	NUT TO STUD	4		411	
	10	00921-21810	PIN-COTTER TO STUD	4		411	
	11	38100-13201	SET-GEAR,HYPOID(35T:8T)	1	1	U,LU,WU, WLU 411	
	12	38100-14301	SET-GEAR,HYPOID(37T:9T)	1		UT,LUT,WUT ,WLUT,UTK 411	
	13	38100-14401	SET-GEAR,HYPOID(35T:9T)	1	1	OP,UT,LUT, WUT,WLUT 411	
	14	38100-61000	SET-GEAR,HYPOID(35T:9T)	1		1.6L 411	
	15	38102-04100	BOLT-DRIVE GEAR	8	1	1.3L 411	
	16	38102-01300	BOLT-DRIVE GEAR	8	50	1.6L 411	
	17	38103-13201	STRAP-BOLT LOCK	4		1.3L 411	

REVISED: SEPTEMBER,1968

Printed in Japan

S	KEY NO.	PART NO.	PART NAME	QTY	SALES UNIT	MODEL	ICA
	18	38103-01300	STRAP-BOLT LOCK	4	50	1.6L 411	
	19	38421-13200	CASE-DIFFERENTIAL GEAR	1		1.3L 411	
	20	38421-07200	CASE-DIFFERENTIAL GEAR	1	1	1.6L 411	
	21	38423-10600	GEAR-SIDE,DIFFERENTIAL LEVEL	2	1	1.3L 411	
	22	38423-14600	GEAR-SIDE	2	1	1.6L 411	
	23	38425-04100	MATE-PINION,DIFFERENTIAL	2		1.3L 411	
	24	38425-00100	GEAR-PINION MATE	2	4	1.6L 411	
	25	38424-04101	WASHER-THRUST,SIDE GEAR(0.785T)	2	10	1.3L 411	
	26	38424-08000	WASHER-THRUST,SIDE GEAR(0.835T)	2	10	1.3L 411	
	27	38424-08001	WASHER-THRUST,SIDE GEAR(0.885T)	2	10	1.3L 411	
	28	38424-08002	WASHER-THRUST,SIDE GEAR(1.035T)	2	10	1.3L 411	
	29	38424-08003	WASHER-THRUST,SIDE GEAR(1.185T)	2	10	1.3L 411	
	30	38424-25660	WASHER-THRUST,SIDE GEAR(T=0.78)	2	10	1.6L 411	
	31	38424-32200	WASHER-THRUST,SIDE GEAR(T=0.83)	2	5	1.6L 411	
	32	38424-32201	WASHER-THRUST,SIDE GEAR(T=0.88)	2	5	1.6L 411	
	33	38424-32202	WASHER-THRUST,SIDE GEAR(T=1.03)	2	5	1.6L 411	
	34	38426-04100	WASHER-THRUST,PINION MATE	2	5	1.3L 411	
	35	38426-32200	WASHER-THRUST,PINION MATE	2	10	1.6L 411	
	36	38427-04100	SHAFT-PINION MATE	1	2	1.3L 411	
	37	38427-25660	SHAFT-PINION MATE	1	1	1.6L 411	

Printed in Japan

REVISED: SEPTEMBER,1968

S	KEY NO.	PART NO.	PART NAME	Q'TY	SALES UNIT	MODEL	ICA
	38	38428-25660	PIN-LOCK,PINION MATE SHAFT	1		411	
	39	38440-04100	ASSY-BEARING,DIFFERENTIAL SIDE	2	1	1.3L 411	
	40	38440-25660	BEARING-DIFFERENTIAL SIDE	2		1.6L 411	
	41	38153-04100	SHIM-ADJUSTING,DRIVE GEAR(0.7T)	AR		1.6L 411	
	42	38154-04100	SHIM-ADJUSTING,DRIVE GEAR(0.25T)	AR		1.3L 411	
	43	38155-04100	SHIM-ADJUSTING,DRIVE GEAR(0.125T)	AR		1.3L 411	
	44	38156-04100	SHIM-ADJUSTING,DRIVE GEAR(0.075T)	AR		1.3L 411	
	45	38161-04100	SHIM-ADJUSTING,DRIVE GEAR(0.05T)	AR		1.3L 411	
	46	38453-27160	SHIM-ADJUSTING,DRIVE GEAR(T=0.75)	AR		1.6L 411	
	47	38455-27160	SHIM-ADJUSTING,DRIVE GEAR(T=0.25)	AR		1.6L 411	
	48	38455-27160	SHIM-ADJUSTING,DRIVE GEAR(T=0.125)	AR		1.6L 411	
	49	38456-27160	SHIM-ADJUSTING,DRIVE GEAR(T=0.075)	AR		1.6L 411	
	50	38161-27160	SHIM-ADJUSTING,DRIVE GEAR(T=0.050)	AR		1.6L 411	
*	51	38120-13200	BEARING-REAR,PINION	1	5	1.3L 411	
	52	38120-13201	BEARING-REAR,PINION	1	1	1.3L 411	Y
	53	38120-61000	BEARING-REAR,PINION	1		1.6L 411	
*	54	38140-13200	ASSY-BEARING,FRONT PINION	1	5	1.3L 411	
	55	38140-13201	ASSY-BEARING,FRONT PINION	1	1	1.3L 411	Y

REVISED: SEPTEMBER,1968

Printed in Japan

S	KEY NO.	PART NO.	PART NAME	QTY	SALES UNIT	MODEL	ICA
	56	38140-61000	ASSY-BEARING-DRIVE PINION,FRONT	1		1.6L 411	
	57	38165-13200	SPACER-DRIVE PINION BEARING	AR	10	1.3L 411	
	58	38166-13200	SPACER-DRIVE PINION BEARING	AR	10	1.3L 411	
	59	38167-13200	SPACER-DRIVE PINION BEARING	AR	10	1.3L 411	
	60	38165-61001	SPACER-DRIVE PINION BEARING(59.25MM)	1	1	1.6L 411	
	61	38166-61001	SPACER-DRIVE PINION BEARING(59.50MM)	1	1	1.6L 411	
	62	38167-61001	SPACER-DRIVE PINION BEARING(59.75MM)	1	1	1.6L 411	
*	63	38153-10601	SHIM-ADJUSTING,DRIVE PINION(0.05T)	AR	10	1.3L 411	
*	64	38154-10601	SHIM-ADJUSTING,DRIVE PINION(0.07T)	AR	10	1.3L 411	
*	65	38155-10601	SHIM-ADJUSTING,DRIVE PINION(0.12T)	AR	10	1.3L 411	
*	66	38156-10601	SHIM-ADJUSTING,DRIVE PINION(0.25T)	AR	10	1.3L 411	
	67	38153-61000	SHIM-ADJUSTING,DRIVE PINION(T=0.050)	AR	10	1.6L 411	
	68	38154-61000	SHIM-ADJUSTING,DRIVE PINION(T=0.075)	AR	5	1.6L 411	
	69	38155-61000	SHIM-ADJUSTING,DRIVE PINION(T=0.125)	AR	5	1.6L 411	
	70	38156-61000	SHIM-ADJUSTING,DRIVE PINION(T=0.250)	AR	5	1.6L 411	
	71	38453-61200	SHIM-ADJUSTING,DRIVE PINION(T=0.500)	AR	10	1.6L 411	
	72	38189-02700	SEAL-OIL	1	10	1.3L 411	
	73	38189-61000	SEAL-OIL	1	10	1.6L 411	

Printed in Japan

REVISED: SEPTEMBER,1968

S	KEY NO.	PART NO.	PART NAME	Q'TY	SALES UNIT	MODEL	ICA
*	74	38210-13201	ASSY-FLANGE,COMPANION(TO MAR-66)	1	1	1.3L 411	
	75	38210-16500	ASSY-FLANGE,COMPANION(FROM APR.-66)	1	1	1.3L 411	Y
	76	38210-61000	ASSY-FLANGE,COMPANION	1	1	1.6L 411	
	77	38215-61000	WASHER-PLAIN TO HYPOID DRIVE PINION	1	10	411	
	78	38216-61000	NUT TO HYPOID DRIVE PI NION	1	5	411	
*	79	00921-43000	PIN-COTTER TO HYPOID D RIVE PINION	1	50	1.3L 411	
	80	00921-43510	PIN-COTTER TO HYPOID D RIVE PINION	1		1.6L 411	
	81	38127-09400	WASHER-ADJUSTING,DRIVE PINION BEARING(2.7T)	1	10	411	
	82	38128-09400	WASHER-ADJUSTING,DRIVE PINION BEARING(2.57T)	1	10	411	
	83	38129-09400	WASHER-ADJUSTING,DRIVE PINION BEARING(2.53T)	1	10	411	
	84	38130-09400	WASHER-ADJUSTING,DRIVE PINION BEARING(2.53T)	1	10	411	
	85	38131-09400	WASHER-ADJUSTING,DRIVE PINION BEARING(2.51T)	1	10	411	
	86	38132-09400	WASHER-ADJUSTING,DRIVE PINION BEARING(2.49T)	1	10	411	
	87	38133-09400	WASHER-ADJUSTING,DRIVE PINION BEARING(2.47T)	1	10	411	
	88	38134-09400	WASHER-ADJUSTING,DRIVE PINION BEARING(2.45T)	1	10	411	
	89	38135-09400	WASHER-ADJUSTING,DRIVE PINION BEARING(2.43T)	1	10	411	
	90	38136-09400	WASHER-ADJUSTING,DRIVE PINION BEARING(2.41T)	1	10	411	
	91	38137-09400	WASHER-ADJUSTING,DRIVE PINION BEARING(2.39T)	1	10	411	

Printed in Japan

REVISED: SEPTEMBER.1968

S	KEY NO.	PART NO.	PART NAME	Q'TY	SALES UNIT	MODEL	ICA
	92	38128-09400	WASHER-ADJUSTING,DRIVE PINION BEARING(2.37T)	1	10	411	
	93	38139-09400	WASHER-ADJUSTING,DRIVE PINION BEARING(2.35T)	1	10	411	
	94	38140-09400	WASHER-ADJUSTING,DRIVE PINION BEARING(2.33T)	1	1	411	
	95	38141-09400	WASHER-ADJUSTING,DRIVE PINION BEARING(2.31T)	1		411	
	96	38153-61000	SHIM-ADJUSTING,DRIVE PINION(T=0.050)	AR		1.6L 411	
	97	38154-61000	SHIM-ADJUSTING,DRIVE PINION(T=0.075)	AR		1.6L 411	
	98	38155-61000	SHIM-ADJUSTING,DRIVE PINION(T=0.075)	AR		1.6L 411	
	99	38156-61000	SHIM-ADJUSTING,DRIVE PINION(T=0.125)	AR		1.6L 411	
	100	38157-61000	SHIM-ADJUSTING,DRIVE PINION(T=0.250)	AR		1.6L 411	
	101	38125-61001	WASHER-THRUST,DRIVE PINION BEARING	1	5	1.6L 411	
	102	38126-61001	WASHER-THRUST,DRIVE PINION BEARING	1	5	1.6L 411	
	103	38127-61001	WASHER-THRUST,DRIVE PINION BEARING	1	5	1.6L 411	
	104	38128-61001	WASHER-THRUST,DRIVE PINION BEARING	1	5	1.6L 411	
	105	38129-61001	WASHER-THRUST,DRIVE PINION BEARING	1	5	1.6L 411	
	106	38130-61001	WASHER-THRUST,DRIVE PINION BEARING	1	5	1.6L 411	
	107	38131-61001	WASHER-THRUST,DRIVE PINION BEARING	1	5	1.6L 411	
	108	38132-61001	WASHER-THRUST,DRIVE PINION BEARING	1	5	1.6L 411	

Printed in Japan

REVISED: SEPTEMBER,1968

S	KEY NO.	PART NO.	PART NAME	Q'TY	SALES UNIT	MODEL	ICA
	109	38134-61001	WASHER-THRUST,DRIVE PINION BEARING	1	10	411	
	110	38135-61001	WASHER-THRUST,DRIVE PINION BEARING	1	10	411	
	111	38136-61001	WASHER-THRUST,DRIVE PINION BEARING	1	10	411	
	112	38137-61001	WASHER-THRUST,DRIVE PINION BEARING	1	10	411	
	113	38138-61001	WASHER-THRUST,DRIVE PINION BEARING	1	10	411	
	114	38139-61001	WASHER-THRUST,DRIVE PINION BEARING	1	10	411	
*	115	38320-04100	GASKET-GEAR CARRIER	1		1.3L 411	
	116	38320-04110	GASKET-GEAR CARRIER	1	10	1.3L 411	Y
*	117	38320-25660	GASKET-GEAR CARRIER	1		1.6L 411	
	118	00911-14510	NUT TO GEAR CARRIER STUD	8		1.3L 411	
	119	00911-14510	NUT TO GEAR CARRIER STUD	10		1.6L 411	
	120	00915-11510	WASHER-LOCK TO GEAR CARRIER STUD	8		1.3L 411	
	121	00915-11510	WASHER-LOCK TO GEAR CARRIER STUD	10		1.6L 411	

REVISED: SEPTEMBER,1968

Printed in Japan

NOTE

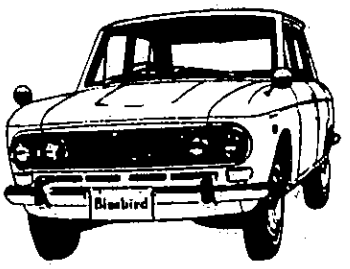

NOTE

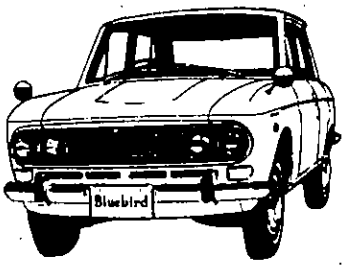

REMOTE CONTROL LEVER (3 SPEED)

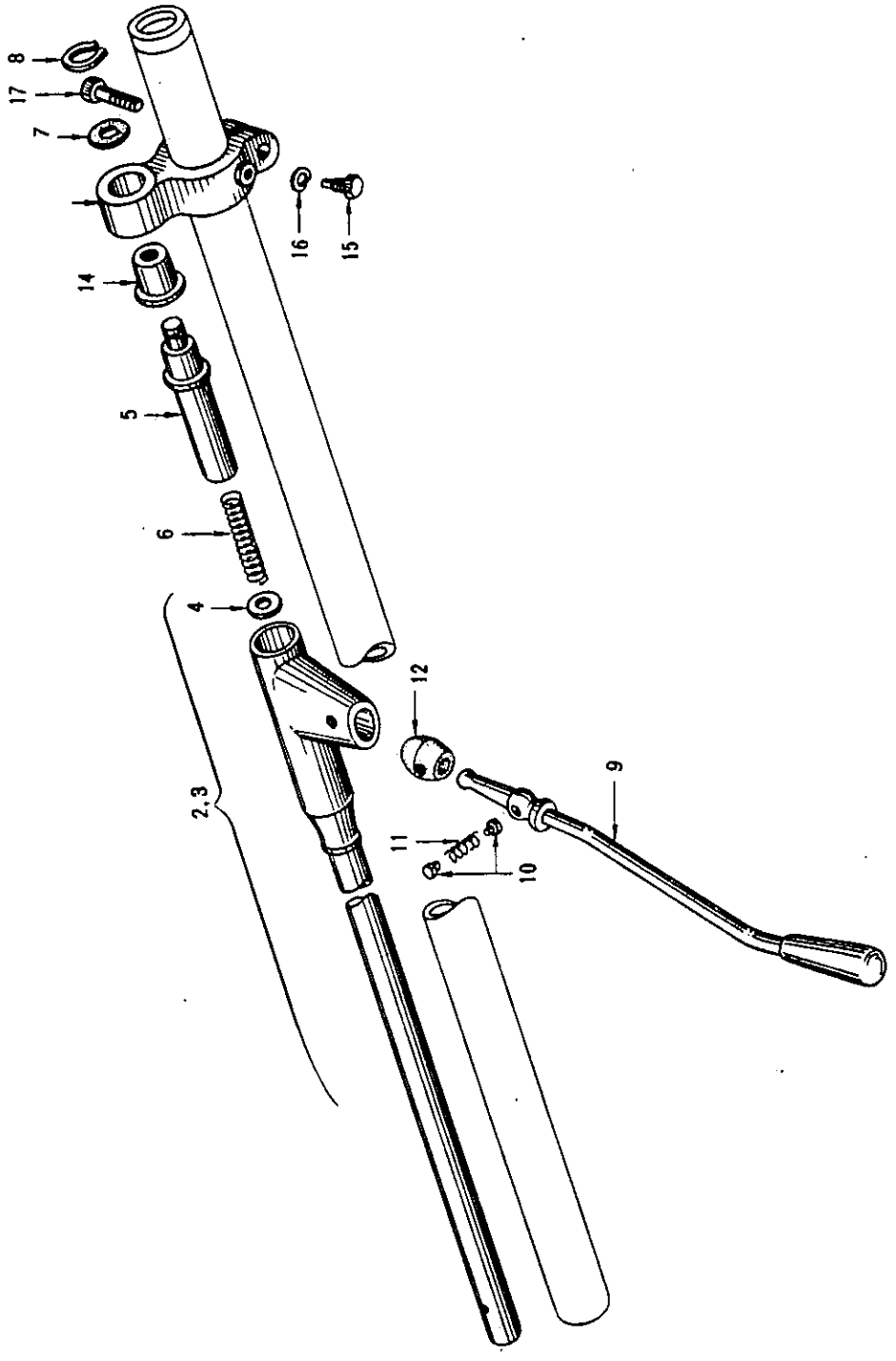

S	KEY NO.	PART NO.	PART NAME	QTY	SALES UNIT	MODEL	ICS
			REMOTE CONTROL LEVER (3 SPEED)				
	1	34102-17050	ASSY-LEVER&ROD,CONTROL	1	1	L DRIVE 41 1	
	2	34103-16500	ASSY-ROD,CONTROL	1	1	R DRIVE 41 1	
	3	34103-17000	ASSY-ROD,CONTROL	1	1	L DRIVE 41 1	
	4	34117-04100	SEAT-RETURN SPRING	1	1	3 SPEED 41 1	
	5	34113-10600	INSERT-CONTROL ROD	1	1	3 SPEED 41 1	
	6	34116-09400	SPRING-RETURN,CONTROL ROD	1	5	3 SPEED 41 1	
	7	34135-10600	WASHER-INSERT,CONTROL ROD	1	10	3 SPEED 41 1	
	8	34134-04100	WASHER-"C"	1	10	3 SPEED 41 1	
	9	34110-10600	ASSY-LEVER,HAND	1	1	411	
	10	34124-10600	PIN-PIVOT,CONTROL LEVER	2	50	3 SPEED 41 1	
	11	34125-10600	SPRING-PIVOT,CONTROL LEVER	1	50	3 SPEED 41 1	
	12	34115-10600	INSULATOR-CONTROL LEVER	1	50	3 SPEED 41 1	
	13	34104-09400	BRACKET-SUPPORT,UPPER	1	1	3 SPEED 41 1	
	14	34105-04100	BUSHING-SUPPORT,UPPER BRACKET	1	10	3 SPEED 41 1	
	15	34129-04100	BOLT-LOCATION,UPPER SUPPORT BRACKET	1	10	3 SPEED 41 1	
	16	00915-11410	WASHER-LOCK	1		3 SPEED 41 1	

Printed in Japan

REVISED: SEPTEMBER,1968

S	KEY NO.	PART NO.	PART NAME	Q'TY	SALES UNIT	MODEL	ICA
	17	34128-30100	SCREW-BRACKET,UPPER SUPPORT	1	10	3 SPEED 41 1	

Printed in Japan

REVISED: SEPTEMBER,1968

NOTE

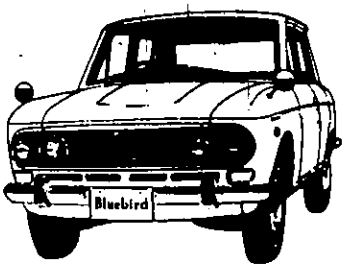

REMOTE CONTROL LINKAGE (3 SPEED)

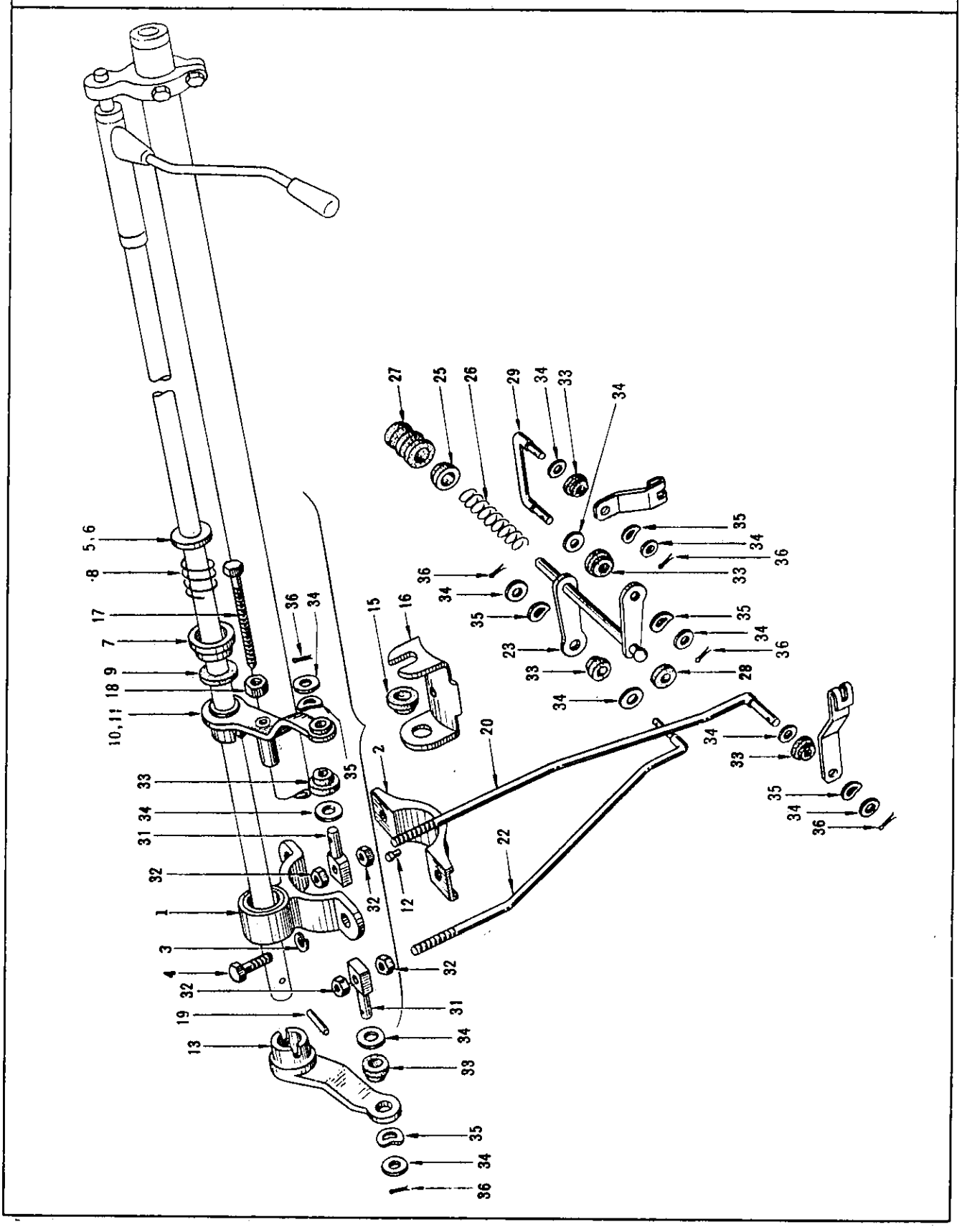

REMOTE CONTROL LINKAGE (3 SPEED)

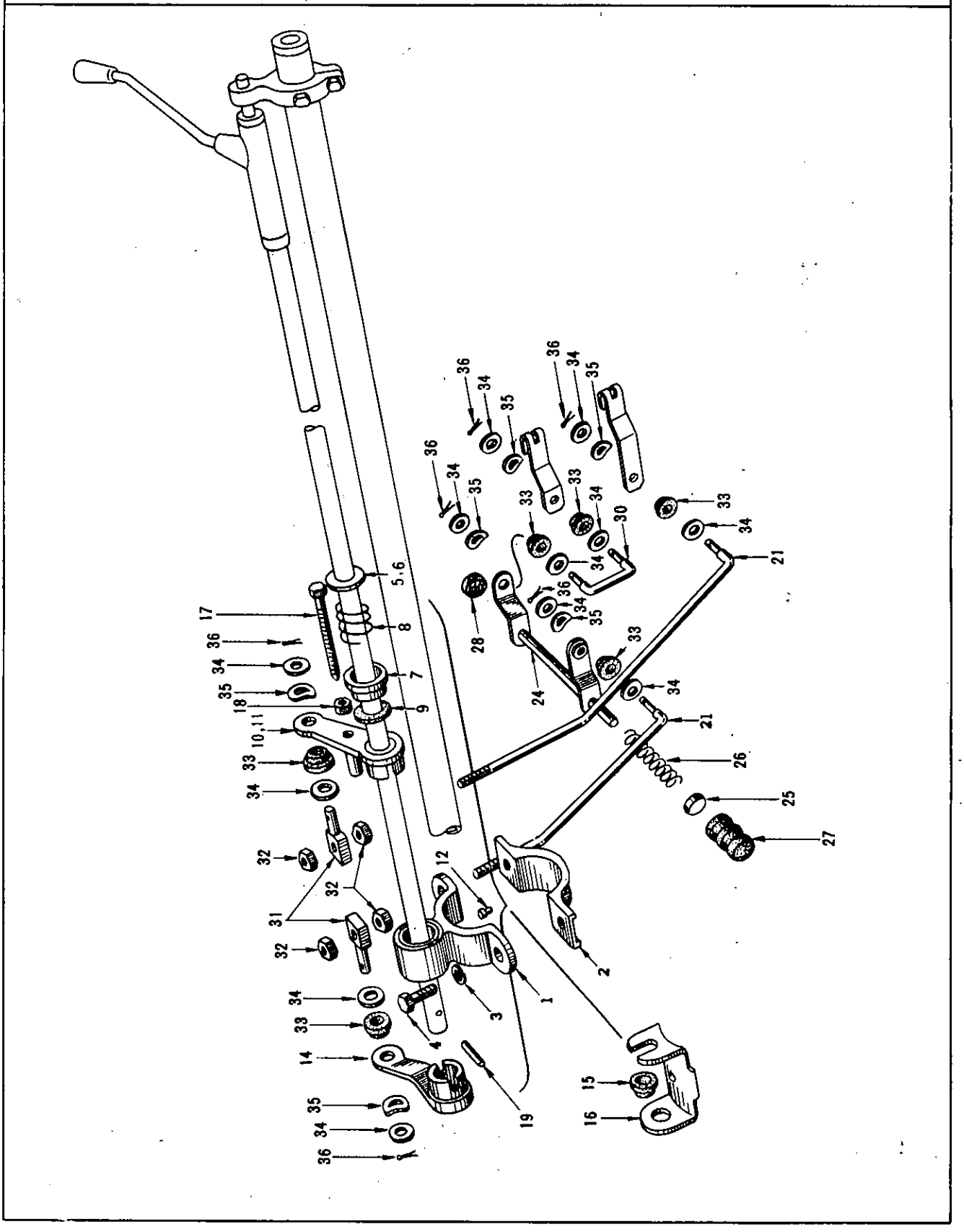

S	KEY NO.	PART NO.	PART NAME	Q'TY	SALES UNIT	MODEL	ICA
			REMOTE CONTROL LINKAGE (3 SPEED)				
	1	34400-10600	ASSY-BRACKET,SUPPORT,LOWER	1	1	3 SPEED 41 1	
	2	34405-61000	CLAMP-LOWER SUPPORT BRACKET	1	1	3 SPEED 41 1	
	3	00915-11410	WASHER-LOCK TO FIX LOWER BRACKET	2		3 SPEED 41 1	
	4	34409-10600	BOLT TO FIX LOWER BRACKET	2	10	3 SPEED 41 1	
	5	34496-61000	WASHER-PLAIN(1.6T)	1	50	3 SPEED 41 1	
	6	34496-61001	WASHER-PLAIN(2.0T)	1		3 SPEED 41 1	
	7	34494-36900	CAP-SPRING,CHANGE SPEED LEVER	1	5	3 SPEED 41 1	
	8	34497-61000	SPRING-CHANGE SPEED LEVER	1		3 SPEED 41 1	
	9	34496-36900	WASHER-PLAIN	1	5	3 SPEED 41 1	
	10	34431-16500	ASSY-LEVER,1ST&REVERSE CHANGE SPEED(UPPER).	1	1	R DRIVE 41 1	
	11	34431-17000	ASSY-LEVER,1ST&REVERSE CHANGE SPEED	1	1	L DRIVE 41 1	
	12	34406-61000	PEG-LOCATION	1	1	3 SPEED 41 1	
	13	34408-16500	ASSY-LEVER,2ND&3RD CHANGE SPEED	1	1	R DRIVE 41 1	
	14	34408-17000	ASSY-LEVER,2ND&3RD CHANGE SPEED	1	1	L DRIVE 41 1	
	15	34491-61000	SEAT-CHANGE SPEED LEVER UPPER	1	5	3 SPEED 41 1	

Printed in Japan

REVISED: SEPTEMBER,1968

S	KEY NO.	PART NO.	PART NAME	Q'TY	SALES UNIT	MODEL	ICA
	16	34492-10600	RETAINER-CHANGE SPEED LEVER	1	1	3 SPEED 41 1	
	17	34439-10600	SCREW-NEUTRAL SETTING	1	10	3 SPEED 41 1	
	18	00911-31410	NUT	1	50	3 SPEED 41 1	
	19	34126-61000	PIN-CONTROL ROD	1	10	3 SPEED 41 1	
	20	34413-16500	ROD-SHIFT,1ST&REVERSE GEAR	1	1	R DRIVE 41 1	
	21	34413-17000	ROD-SHIFT,1ST&REVERSE GEAR	1	1	L DRIVE 41 1	
	22	34450-16500	ROD-SHIFT,2ND&3RD GEAR ,UPPER	1	1	R DRIVE 41 1	
	23	34453-10601	ASSY-SHAFT,CROSS,CHANGE SPEED CONTROL	1	1	R DRIVE 41 1	
	24	34453-17000	ASSY-SHAFT,CROSS,CHANGE SPEED CONTROL	1	1	L DRIVE 41 1	
	25	34462-61000	BUSHING-SPHERICAL,CROSS SHAFT	1	2	3 SPEED 41 1	
	26	34463-10600	SPRING-RETAINING,CROSS SHAFT	1	10	3 SPEED 41 1	
*	27	34467-10600	BOOT-CROSS SHAFT,OUTER	1		3 SPEED 41 1	
	28	34466-10600	BOOT-CROSS SHAFT,INNER	1		3 SPEED 41 1	
*	29	34438-10601	ROD-SHIFT,2ND&3RD,LOWER	1	1	R DRIVE 41 1	
	30	34438-17000	ROD-SHIFT,2ND&3RD,LOWER	1	1	L DRIVE 41 1	
	31	34410-04100	TRUNNION-GEAR SHIFT ROD	2		3 SPEED 41 1	
	32	00911-14610	NUT	4		3 SPEED 41 1	

REVISED: SEPTEMBER,1968

S	KEY NO.	PART NO.	PART NAME	QTY	SALES UNIT	MODEL	ICA
*	33	34402-04100	INSULATOR-GEAR SHIFT R OD	6	10	3 SPEED 41 1	
	34	34414-04100	WASHER-PLAIN	12	50	3 SPEED 41 1	
	35	34419-04100	WASHER-SPECIAL	6	10	3 SPEED 41 1	
	36	00921-21810	PIN-COTTER	6		3 SPEED 41 1	

NOTE

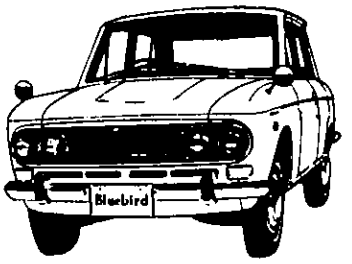

TRANSMISSION CONTROL (AUTOMATIC)

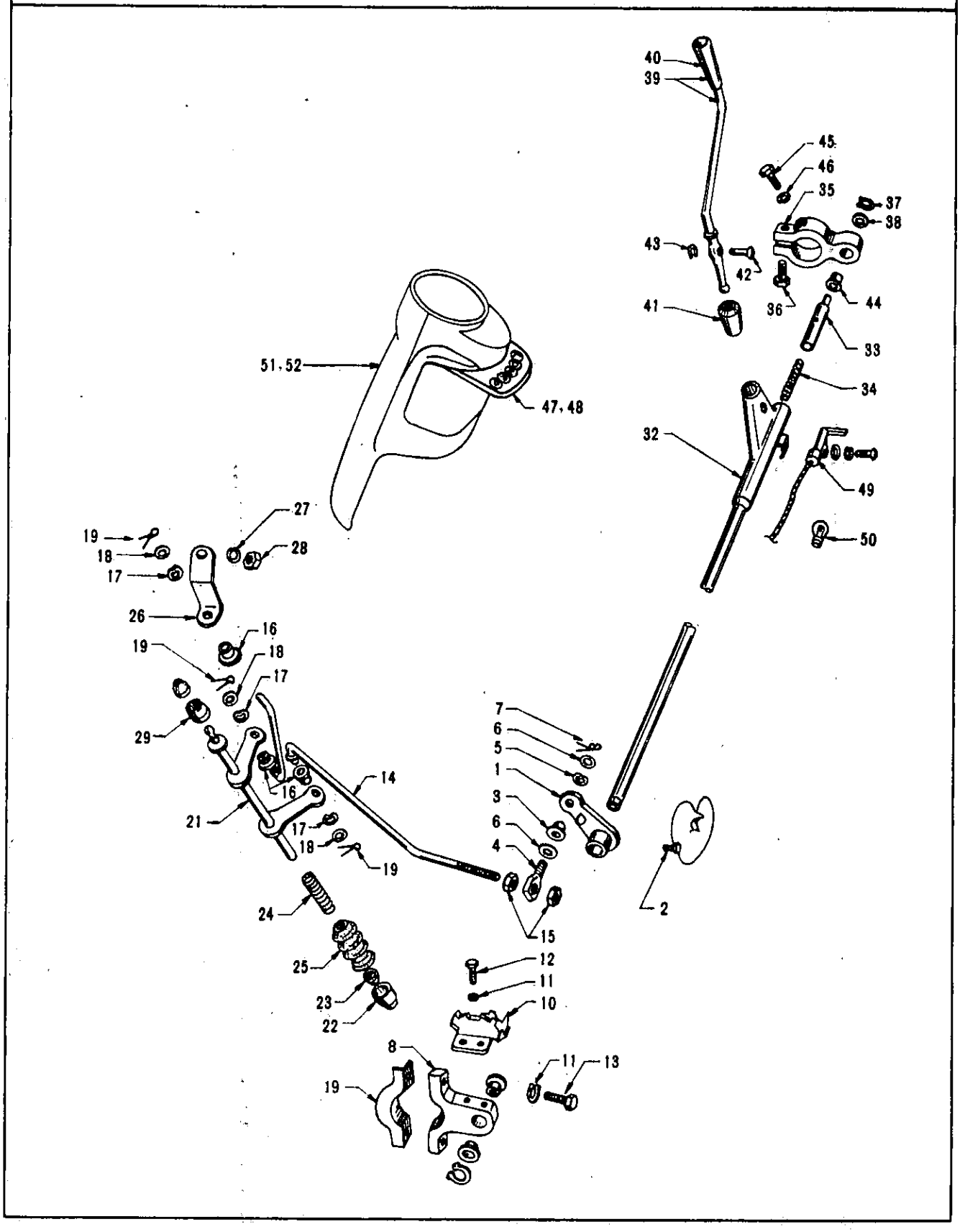

S	KEY NO.	PART NO.	PART NAME	Q'TY	SALES UNIT	MODEL	ICA
			TRANSMISSION CONTROL (AUTOMATIC)				
	1	34440-24500	ASSY-LEVER,SELECT	1	2	411 RL-UAK ,WRL-UAK	
	2	34434-30000	SCREW-LOCKING	1	10	411 RL-UAK ,WRL-UAK	
	3	34481-73700	INSULATOR	1	1	411 RL-UAK ,WRL-UAK	
	4	34482-73700	TRUNNION-JOINT	1		411 RL-UAK ,WRL-UAK	
	5	34483-73700	WASHER-LOCK	1	1	411 RL-UAK ,WRL-UAK	
	6	34484-73700	WASHER-PLAIN	2	2	411 RL-UAK ,WRL-UAK	
	7	00921-11810	PIN-COTTER	1	50	411 RL-UAK ,WRL-UAK	
	8	34400-24500	COMP.-BRACKET,LOWER SUPPORT	1	1	411 RL-UAK ,WRL-UAK	
	9	34405-61000	CLAMP-LOWER BRACKET	1	1	411 RL-UAK ,WRL-UAK	
	10	34406-24500	PLATE-POSITION,SPEED RANGE	1	10	411 RL-UAK ,WRL-UAK	
	11	00915-11410	WASHER-LOCK	4		411 RL-UAK ,WRL-UAK	
	12	00369-41210	BOLT	2	50	411 RL-UAK ,WRL-UAK	
	13	34409-10600	BOLT	2	10	411 RL-UAK ,WRL-UAK	
	14	34450-24500	ROD-SELECTOR,UPPER	1	5	411 RL-UAK ,WRL-UAK	
	15	00911-14510	NUT	2		411 RL-UAK ,WRL-UAK	

Printed in Japan

REVISED: SEPTEMBER,1968

S	KEY NO.	PART NO.	PART NAME	Q'TY	SALES UNIT	MODEL	ICA
	16	34481-73700	INSULATOR	3	1	411 RL-UAK ,WRL-UAK	
	17	34483-73700	WASHER-SPRING	3	1	411 RL-UAK ,WRL-UAK	
	18	34484-73700	WASHER-PLAIN	6	2	411 RL-UAK ,WRL-UAK	
	19	00921-11810	PIN-COTTER	3	50	411 RL-UAK ,WRL-UAK	
	20	34451-24500	ROD-SELECTOR,LOWER	1		411 RL-UAK ,WRL-UAK	
	21	34501-24500	ASSY-SHAFT,CROSS,SPEED CONTROL	1	1	411 RL-UAK ,WRL-UAK	
	22	34461-61000	SUPPORT-CROSS SHAFT	1		411 RL-UAK ,WRL-UAK	
	23	34462-61000	BUSH-CROSS SHAFT	1	2	411 RL-UAK ,WRL-UAK	
	24	34463-10600	SPRING-RETAINING	1	10	411 RL-UAK ,WRL-UAK	
	25	34467-10600	COVER-CROSS SHAFT,OUTER	1		411 RL-UAK ,WRL-UAK	
	26	31913-24500	LEVER-RANGE,SELECTOR	1	5	411 RL-UAK ,WRL-UAK	
	27	00915-21510	WASHER-SPRING 5/16	1		411 RL-UAK ,WRL-UAK	
	28	00911-14510	NUT-HEX 5/16-24	1		411 RL-UAK ,WRL-UAK	
	29	34458-61000	COVER-CROSS SHAFT INNER	1	5	411 RL-UAK ,WRL-UAK	
	30	34465-61000	SOCKET-BALL,CROSS SHAFT	1	1	RL-UAK,WRL-UAK	
	31	34102-24500	ASSY-LEVER&ROD,SPEED CONTROL	1	1	411 RL-UAK ,WRL-UAK	
	32	34103-24500	ASSY-ROD,SPEED CONTROL	1	1	411 RL-UAK ,WRL-UAK	

REVISED: SEPTEMBER,1968

Printed in Japan

S	KEY NO.	PART NO.	PART NAME	Q'TY	SALES UNIT	MODEL	ICA
	33	34113-10600	INSERT-CONTROL ROD	1	1	411 RL-UAK ,WRL-UAK	
	34	34116-62800	SPRING-RETURN,SPEED CO NTROL	1	5	411 RL-UAK ,WRL-UAK	
	35	34104-09400	BRACKET-SUPPORT,UPPER	1	1	411 RL-UAK ,WRL-UAK	
	36	34105-73000	BUSH-UPPER SUPPORT BRA CKET	1	1	411 RL-UAK ,WRL-UAK	
	37	34134-04100	WASHER-"C"	1	10	411 RL-UAK ,WRL-UAK	
	38	34135-73000	WASHER-INSERT,CONTROL ROD	1	10	411 RL-UAK ,WRL-UAK	
	39	34110-20200	ASSY-LEVER,HAND	1	1	411 RL-UAK ,WRL-UAK	
	40	34119-73700	KNOB-HAND LEVER	1	2	411 RL-UAK ,WRL-UAK	
	41	34115-10600	INSULATOR-CONTROL LEVE R	1	50	411 RL-UAK ,WRL-UAK	
	42	34124-73200	PIN-PIVOT,HAND LEVER	1	10	411 RL-UAK ,WRL-UAK	
	43	34125-36700	SNAP-RING	1	10	411 RL-UAK ,WRL-UAK	
	44	34128-30100	SCREW-SOCKET	1	10	411 RL-UAK ,WRL-UAK	
	45	34129-73001	BOLT-LOCATING UPPER BR ACKET	1	10	411 RL-UAK ,WRL-UAK	
	46	00915-11410	WASHER-LOCK,INTERNAL T OOTH	1		411 RL-UAK ,WRL-UAK	
	47	48473-24500	PLATE-INDICATOR	1	1	411 RL-UAK ,WRL-UAK	
	48	48473-24501	PLATE-INDICATOR	1		RL-UAK,WRL -UAK	N
	49	34142-24500	ASSY-SOCKET,INDICATOR	1	1	411 RL-UAK ,WRL-UAK	

REVISED: SEPTEMBER,1968

Printed in Japan

S	KEY NO.	PART NO.	PART NAME	Q'TY	SALES UNIT	MODEL	ICA
	50	48475-20200	BULB-INDICATOR	1		411 RL-UAK ,WRL-UAK	
*	51	48470-24500	SET-SHELL,STEERING	1	1	411 RL-UAK ,WRL-UAK	
	52	48470-24501	SET-SHELL,STEERING	1	1	411 RL-UAL ,WRL-UAK	Y

REVISED: SEPTEMBER,1968

Printed in Japan

NOTE

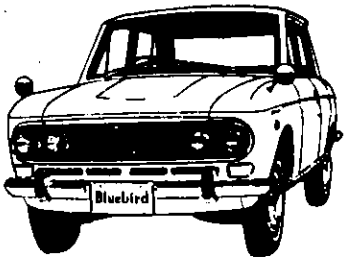

BRAKE PEDAL

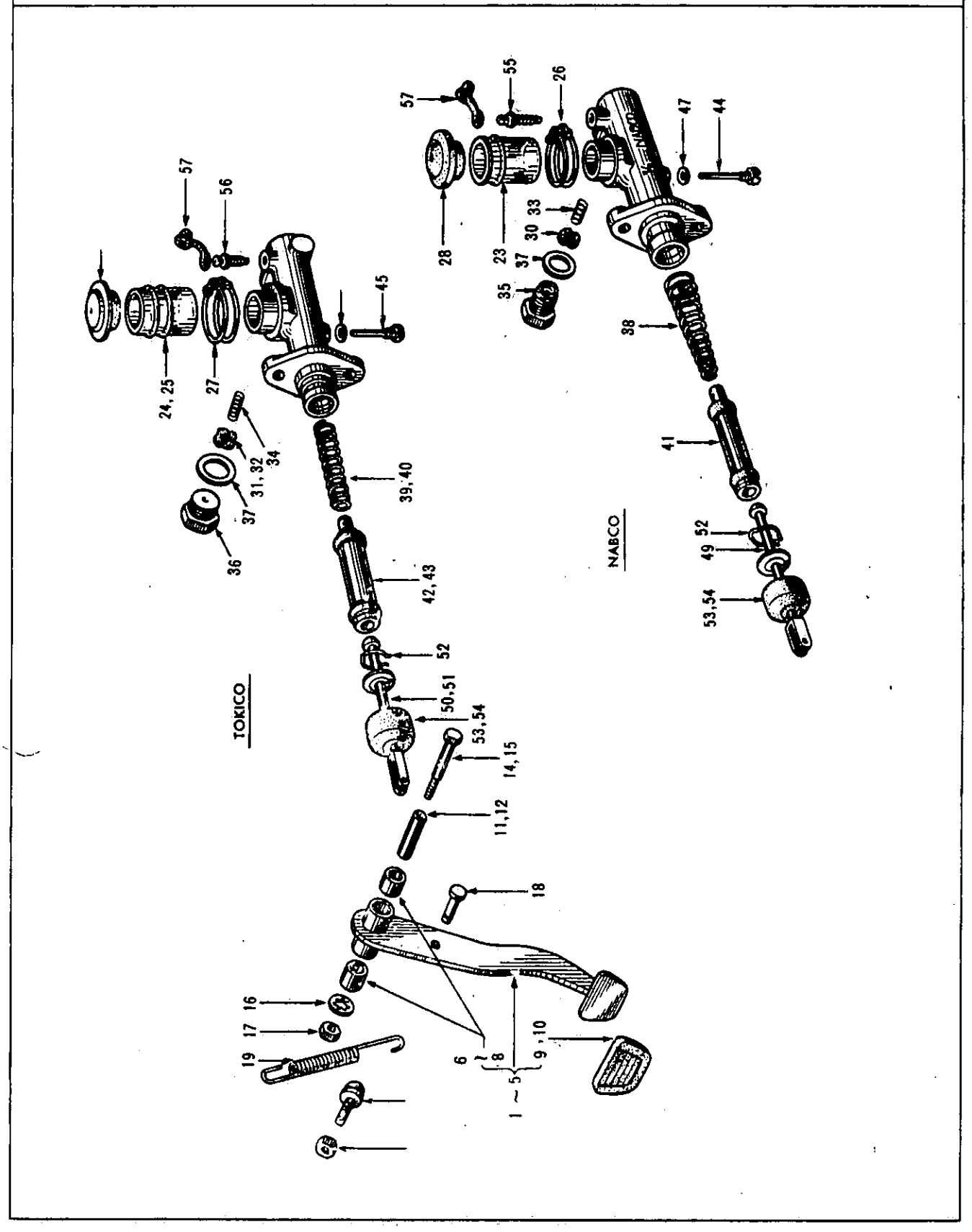
TOKICO
NABCO
57
56
24, 25
27
45
34
31, 32
37
36
39, 40
42, 43
52
50, 51
53, 54
14, 15
11, 12
18
16
17
19
6 ~ 8
1 ~ 5
9, 10
55
26
28
23
33
30
37
35
47
44
38
41
52
49
53, 54

S	KEY NO.	PART NO.	PART NAME	Q'TY	SALES UNIT	MODEL	ICA
			BRAKE PEDAL				
*	1	46520-10652	ASSY-PEDAL,BRAKE	1		R DRIVE 41 1	
	2	46520-10603	ASSY-PEDAL,BRAKE FROM C/#P411-125009 PL411-037673 WP411-820010 WPL 411-820202	1		R DRIVE 41 1	N
*	3	46520-10850	ASSY-PEDAL,BRAKE	1		L DRIVE 41 1	
	4	46520-10801	ASSY-PEDAL,BRAKE FROM C/#P411-125009 PL411-037673 WP411-820010 WPL 411-820202	1		L DRIVE 41 1	N
	5	46520-24500	ASSY-PEDAL,BRAKE	1	1	RL-UAK,WRL -UAK 411	
	6	46425-30000	BUSHING-PEDAL,FULCRUM(TO MAR-66)	2	10	411	
	7	46425-18400	BUSHING-PEDAL,FULCRUM(FROM APR.-66 TO SEP-66)	2	10	411	Y
	8	46525-73000	BUSHING-PEDAL,FULCRUM(FROM OCT.-66)	2	10	411	N
	9	46531-10601	COVER-PEDAL	1	5	411	
	10	46531-11700	COVER-PEDAL	1	1	RL-UAK,WRL -UAK 411	
	11	46482-30000	SLEEVE-PEDAL SHAFT	1		411	
	12	46582-18400	SLEEVE-PEDAL SHAFT	1	5	411	
	13	46483-10800	SPACER-PEDAL SHAFT	1	10	L DRIVE 41 1	
	14	46460-04100	PIN-FULCRUM	1	10	R DRIVE 41 1	
	15	46460-32200	PIN-FULCRUM	1	1	L DRIVE 41 1	

S	KEY NO.	PART NO.	PART NAME	Q'TY	SALES UNIT	MODEL	ICA
*	16	00916-11800	WASHER	1	50	411	
	17	00911-34810	NUT	1		R DRIVE 411	
*	18	46123-08700	PIN-CLEVIS,BRAKE MASTER CYLINDER	1	10	411	
	19	46485-32200	SPRING-RETURN,BRAKE PEDAL	1	10	411	
	20	46010-10601	ASSY-CYLINDER,BRAKE MASTER(7/8")	1	1	R DRIVE 411	
	21	46010-10800	ASSY-CYLINDER,BRAKE MASTER	1	1	L DRIVE 411 (EXC, 1.6L)	
	22	46010-18901	ASSY-CYLINDER,BRAKE MASTER	1	1	1.6L 411	
	23	46091-10600	RESERVOIR-BRAKE OIL(NABCO)	1		1.3L 411	
	24	46091-10610	RESERVOIR-BRAKE OIL(TOKICO)	1		1.3L 411	
	25	46091-16500	RESERVOIR-BRAKE OIL(NABCO)	1		1.6L 411	
	26	46016-12200	ASSY-BAND,OIL RESERVOIR(NABCO)	1	10	411	
	27	46016-10610	ASSY-BAND,OIL RESERVOIR(TOKICO)	1	5	411	
	28	46020-10601	SET-CAP,OIL RESERVOIR(NABCO)	1		411	
	29	46020-10611	SET-CAP,OIL RESERVOIR(TOKICO)	1	5	411	
	30	46050-10600	ASSY-VALVE(NABCO)	1	10	1.3L 411	
	31	46050-10610	ASSY-VALVE(TOKICO)	1		1.3L 411	
	32	46050-14600	ASSY-VALVE(NABCO)	1		1.6L 411	
	33	46027-10600	SPRING-VALVE(NABCO)	1		411	
	34	46027-10610	SPRING-VALVE(TOKICO)	1	10	411	

Printed in Japan

REVISED: SEPTEMBER,1968

S	KEY NO.	PART NO.	PART NAME	QTY		
	35	46038-12200	CAP-VALVE(NABCO)	1	5	411
	36	46038-10610	CAP-VALVE(TOKICO)	1	5	411
	37	46042-27260	GASKET-CAP,VALVE	1	10	411
	38	46061-10600	SPRING-PISTON(NABCO)	1	5	1.3L 411
	39	46061-10610	SPRING-PISTON(TOKICO)	1	5	1.3L 411
	40	46075-27260	SPRING-PISTON(NABCO)	1	5	1.6L 411
	41	46063-10601	ASSY-PISTON,BRAKE MASTER CYLINDER(NABCO)	1	5	1.3L 411
	42	46063-10611	ASSY-PISTON,BRAKE MASTER CYLINDER(TOKICO)	1	5	1.3L 411
	43	46063-16500	ASSY-PISTON,BRAKE MASTER CYLINDER(NABCO)	1		1.6L 411
	44	46070-10600	SCREW-STOPPER(NABCO)	1		411 EXC. 1.6L
	45	46070-10610	SCREW-STOPPER(TOKICO)	1	10	411 EXC. 1.6L
	46	46070-18900	STOPPER-PISTON(NABCO)	1	50	1.6L 411
	47	46043-27260	PACKING(NABCO)	1	10	411
	48	46079-27260	"O"RING(NABCO)	1	1	411
	49	46080-10600	ASSY-ROD,PUSH(NABCO)	1	1	1.3L 411
	50	46080-10611	ASSY-ROD,PUSH(TOKICO)	1	5	1.3L 411
	51	46080-18900	ASSY-ROD,PUSH(NABCO)	1	5	1.6L 411
	52	46071-27260	RING-SNAP	1	10	411
	53	46100-27260	COVER-DUST	1		411 EXC. 1.6L
	54	46084-18900	COVER-DUST	1		1.6L 411
	55	41128-30001	SCREW-BLEEDER(NABCO)	1		411
	56	46041-10610	SCREW-BLEEDER(TOKIKO)	1		411
	57	41129-30001	CAP-BLEEDER SCREW	1		411

Printed in Japan

REVISED: SEPTEMBER,1968

S	KEY NO.	PART NO.	PART NAME	QTY	SALES UNIT	MODEL	ICA
	58	46117-27260	SHIM-MASTER CYLINDER(T =1.6)	AR	10	411	
	59	46118-27260	SHIM-MASTER CYLINDER(T =0.8)	AR	10	411	
	60	46119-27260	SHIM-MASTER CYLINDER(T =0.5)	AR	1	411	
	61	30614-01300	BOLT-SERRATION	2	10	411	
	62	00911-14510	NUT	2		411	
	63	00915-21510	WASHER-LOCK	2		411	
	64	46010-10825	KIT-REPAIR"A",BRAKE(NABCO)(INC.24,31,35,39,RETAINER,SEATS,CUPS,RING,VALVE,SPRING,COVER)	1	10	1.3L 411	
	65	46010-10826	KIT-REPAIR"B",BRAKE MASTER(NABCO)(INC.KIT"A"+27)	1	10	1.3L 411	
	66	46010-10827	KIT-REPAIR"A",BRAKE MASTER(TIKICO)(INC.24,31,35,39,RETAINER,SEATS,CUPS,RING,VALVE,SPRING,COVER)	1	10	1.3L 411	
	67	46010-10828	KIT-REPAIR"B",BRAKE MASTER(TOKICO)(INC.KIT"A"+27)	1	1	1.3L 411	
	68	46010-18925	KIT-REPAIR"A",BRAKE MASTER(NABCO)(INC.24,31,35,39,RETAINER,SEATS,CUPS,RING,VALVE,SPRING,COVER)	1	1	1.6L 411	
	69	46010-18926	KIT-REPAIR"B",BRAKE MASTER(NABCO)(INC.KIT"A"+27)	1	1	1.6L 411	

Printed in Japan

REVISED: SEPTEMBER,1968

NOTE

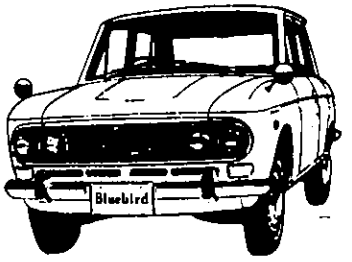

FRONT BRAKE (DRUM) (1.3 L)

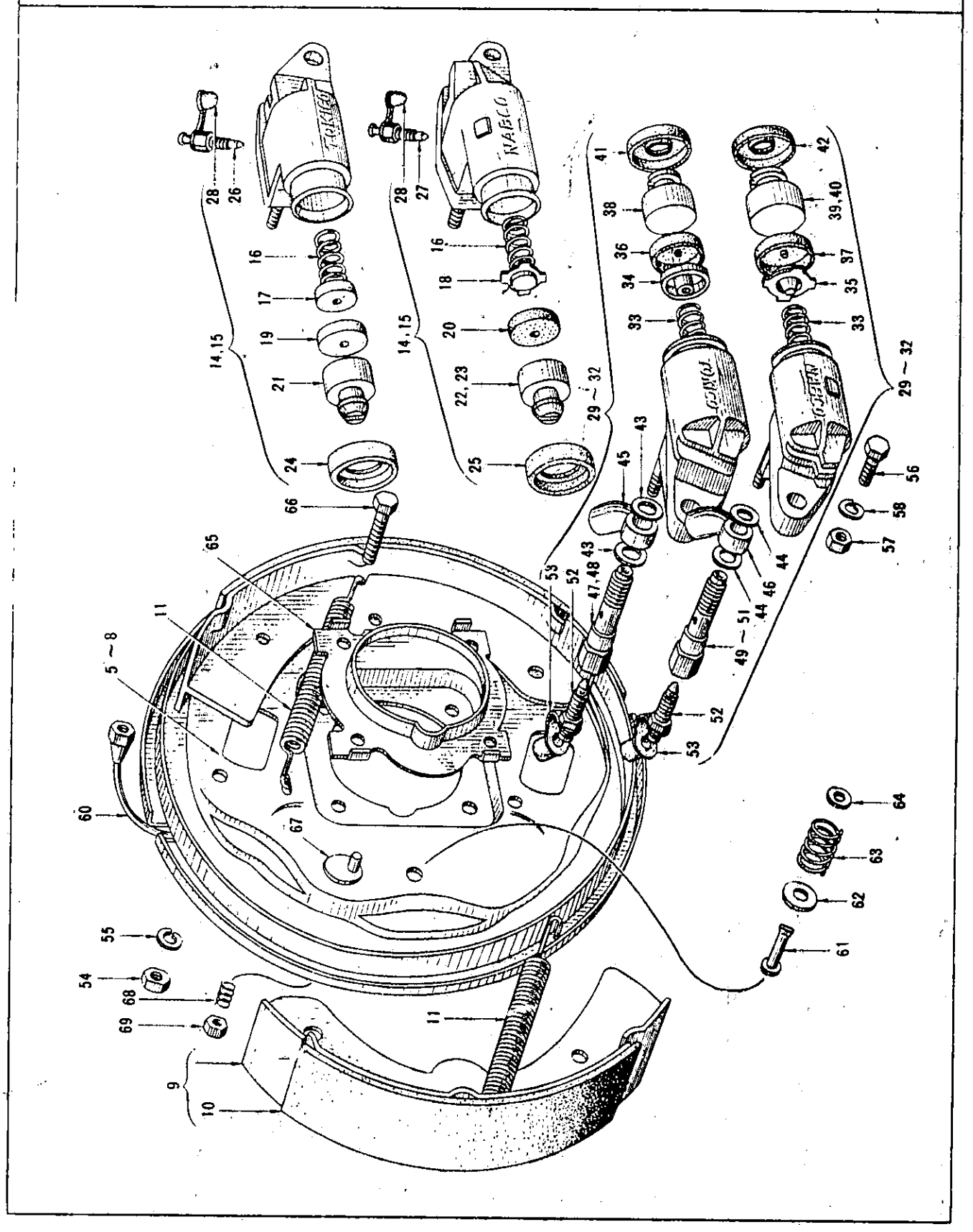

S	KEY NO.	PART NO.	PART NAME	QTY	SALES UNIT	MODEL	ICA
			FRONT BRAKE (DRUM) (1.3 L)				
*	1	41000-10600	ASSY-BRAKE,FRONT(R.H.)(TO SEP-66)	1	1	1.3L 411	
	2	41000-19400	ASSY-BRAKE,FRONT(R.H.)(FROM OCT.-66)	1	1	1.3L 411	Y
*	3	41010-10600	ASSY-BRAKE,FRONT(L.H.)(TO SEP-66)	1		1.3L 411	
	4	41010-19400	ASSY-BRAKE,FRONT(L.H.)(FROM OCT.-66)	1	1	411	Y
*	5	41020-10600	ASSY-DISC,FRONT BRAKE(R.H.)(TO SEP-66)	1	1	1.3L 411	
	6	41020-18400	ASSY-DISC,FRONT BRAKE(R.H.)(FROM OCT.-66)	1	1	1.3L 411	Y
*	7	41030-10600	ASSY-DISC,FRONT BRAKE(L.H.)(TO SEP-66)	1	1	1.3L 411	
	8	41030-18400	ASSY-DISC,FRONT BRAKE(L.H.)(FROM OCT.-66)	1	1	1.3L 411	Y
*	9	41060-10500	ASSY-SHOE,FRONT BRAKE	4		1.3L 411	
	10	41066-10500	LINING-BRAKE	4	1	1.3L 411	
	11	41090-10602	SPRING-RETURN,FRONT BRAKE SHOE	4	5	1.3L 411	
*	12	41100-10600	ASSY-CYLINDER,FRONT WHEEL,FORE(R.H.)(TO SEP-66)	1	1	1.3L 411	
	13	41100-18400	ASSY-CYLINDER,FRONT WHEEL,FORE(R.H.)(FROM OCT.-66) Nambco	1	1	1.3L 411	Y
*	14	41102-10600	ASSY-CYLINDER,FRONT WHEEL,FORE(L.H.)(TO SEP-66)	1	1	1.3L 411	
	15	41102-18400	ASSY-CYLINDER,FRONT WHEEL,FORE(L.H.)(FROM OCT.-66) Nambco	1	1	1.3L 411	Y

REVISED: SEPTEMBER,1968

Printed in Japan

S	KEY NO.	PART NO.	PART NAME	QTY	SALES UNIT	MODEL	ICA
*	16	41125-30001	SPRING-PISTON	2	10	1.3L 411	
*	17	41116-10610	SEAT-SPRING,(TOKICO)	2	10	1.3L 411	
*	18	41116-10500	SEAT-SPRING,(NABCO)	2	5	1.3L 411	
*	19	44112-12060	CUP-PISTON(TOKICO)	2	20	1.3L 411	
	20	44112-12061	CUP-PISTON(NABCO)	2	20	1.3L 411	
	21	41122-10610	PISTON-CYLINDER,FRONT WHEEL,FORE(TOKICO)	2	10	1.3L 411	
*	22	41110-10500	PISTON-CYLINDER,FRONT WHEEL,FORE(NABCO)	2	1	1.3L 411	
	23	41122-18400	PISTON-CYLINDER,FRONT WHEEL,FORE(NABCO)(FROM 66-OCT.)	2	10	1.3L 411	
	24	41123-10610	COVER-DUST(TOKICO)	2		1.3L 411	
	25	41123-10500	COVER-DUST(NABCO)	2	10	1.3L 411	
	26	41161-10610	SCREW-BLEEDER(TOKICO)	2	5	1.3L 411	
	27	41161-10600	SCREW-BLEEDER(NABCO)	2	10	1.3L 411	
	28	41129-30001	CAP-BLEEDER	2		1.3L 411	
*	29	41101-10600	ASSY-CYLINDER,FRONT WHEEL,AFTER(R.H.)(TO SEP-66)	1	1	1.3L 411	
	30	41101-18400	ASSY-CYLINDER,FRONT WHEEL,AFTER(R.H.)(FROM OCT.-66)	1	1	1.3L 411	Y
*	31	41103-10600	ASSY-CYLINDER,FRONT WHEEL,AFTER(L.H.)(TO SEP.-66)	1	1	1.3L 411	
	32	41103-18400	ASSY-CYLINDER,FRONT WHEEL,AFTER(L.H.)(FROM OCT.-66)	1	1	1.3L 411	Y
*	33	41125-30001	SPRING-PISTON	2	10	1.3L 411	
*	34	41116-10610	SEAT-SPRING(TOKICO)	2	10	1.3L 411	
*	35	41116-10500	SEAT-SPRING(NABCO)	2	5	1.3L 411	

REVISED: SEPTEMBER,1968

Printed in Japan

S	KEY NO.	PART NO.	PART NAME	Q'TY	SALES UNIT	MODEL	ICA
*	36	44112-12060	CUP-PISTON(TOKICO)	2	20	1.3L 411	
	37	44112-12061	CUP-PISTON(NABCO)	2	20	1.3L 411	
	38	41122-10610	PISTON-CYLINDER,FRONT WHEEL,AFTER(TOKICO)	2	10	1.3L 411	
*	39	41110-10500	PISTON-CYLINDER,FRONT WHEEL,AFTER(NABCO)(TO SEP-66)	2	1	1.3L 411	
	40	41122-18400	PISTON-CYLINDER,FRONT WHEEL,AFTER(NABCO)(FROM OCT-66	2	10	1.3L 411	Y
	41	41123-10610	COVER-DUST(TOKICO)	2		1.3L 411	
	42	41123-10500	COVER-DUST(NABCO)	2	10	1.3L 411	
	43	41158-04110	PACKING(TOKICO)	4	10	1.3L 411	
	44	41158-04100	PACKING(NABCO)	4		1.3L 411	
	45	41130-08010	CONNECTOR(TOKICO)	2	10	1.3L 411	
	46	41130-08000	CONNECTOR(NABCO)	2	5	1.3L 411	
	47	41128-08010	BOLT-CONNECTING(TO SEP-66)(TOKICO)	2	10	1.3L 411	
*	48	41128-18410	BOLT-CONNECTING(FROM OCT.-66)(TOKICO)	2	10	1.3L 411	Y
	49	41162-10600	BOLT-CONNECTING(NABCO)	2	1	1.3L 411	
*	50	41128-08000	BOLT-CONNECTING(TO SEP-66)(NABCO)	2	10	1.3L 411	Y
	51	41128-18400	BOLT-CONNECTING(FROM OCT-66)(NABCO)	2		1.3L 411	Y
	52	41128-30001	SCREW-BLEEDER	2		1.3L 411	
	53	41129-30001	CAP-BLEEDER	2		1.3L 411	
	54	00911-14410	NUT	4		1.3L 411	
	55	00915-11410	WASHER-LOCK	4		1.3L 411	
	56	00124-52210	BOLT	4	50	1.3L 411	
	57	00911-24510	NUT	4	100	1.3L 411	

REVISED: SEPTEMBER,1968

Printed in Japan

S	KEY NO.	PART NO.	PART NAME	Q'TY	SALES UNIT	MODEL	ICA
	58	00915-11510	WASHER-LOCK	4		1.3L 411	
	59	41140-10600	ASSY-TUBE,BRIDGE,FRONT (R.H.)	1	1	1.3L 411	
	60	41141-10600	ASSY-TUBE,BRIDGE,FRONT (L.H.)	1	1	1.3L 411	
	61	44081-32201	PIN-ANTI RATTLE,SHOE	4		1.3L 411	
	62	44082-32200	SEAT-SPRING,ANTI RATTLE,SHOE	4		1.3L 411	
	63	41083-10600	SPRING-ANTI RATTLE,SHOE	4	10	1.3L 411	
	64	44084-32201	RETAINER-SPRING,ANTI RATTLE,SHOE	4	5	1.3L 411	
	65	40056-10601	CATCHER-GREASE,FRONT	2	10	1.3L 411	
	66	00124-62510	BOLT(TO FIX BRAKE DISC.)	2	50	1.3L 411	
	67	41028-10600	CAM-SHOE ADJUSTING	4	1	1.3L 411	
	68	41020-30001	SPRING-SHOE ADJUSTING	4	10	1.3L 411	
	69	41029-10500	NUT-CAM	4		1.3L 411	
	70	41100-10625	KIT-REPAIR"A",WHEEL CYLINDER(NABCO)(INC.8,10,14,17,29)	1	1	1.3L 411	
	USE	D1100 B9625					
	71	41100-10626	KIT-REPAIR"B",WHEEL CYLINDER(NABCO)(INC.8,10,12,14,17,19,29)	1	1	1.3L 411	
	72	41100-10627	KIT-REPAIR"A",WHEEL CYLINDER(TOKICO)(INC.7,9,13,17,28)	1	1	1.3L 411	
	73	41100-10628	KIT-REPAIR"B",WHEEL CYLINDER(TOKICO)(INC.7,9,11,13,17,19,28)	1	1	1.3L 411	

Printed in Japan

REVISED: SEPTEMBER,1968

NOTE

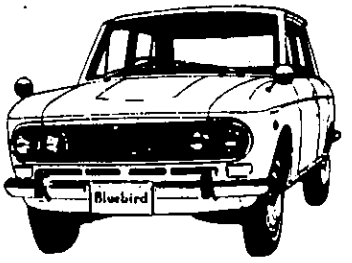

FRONT BRAKE (DISC) (1.6 L)

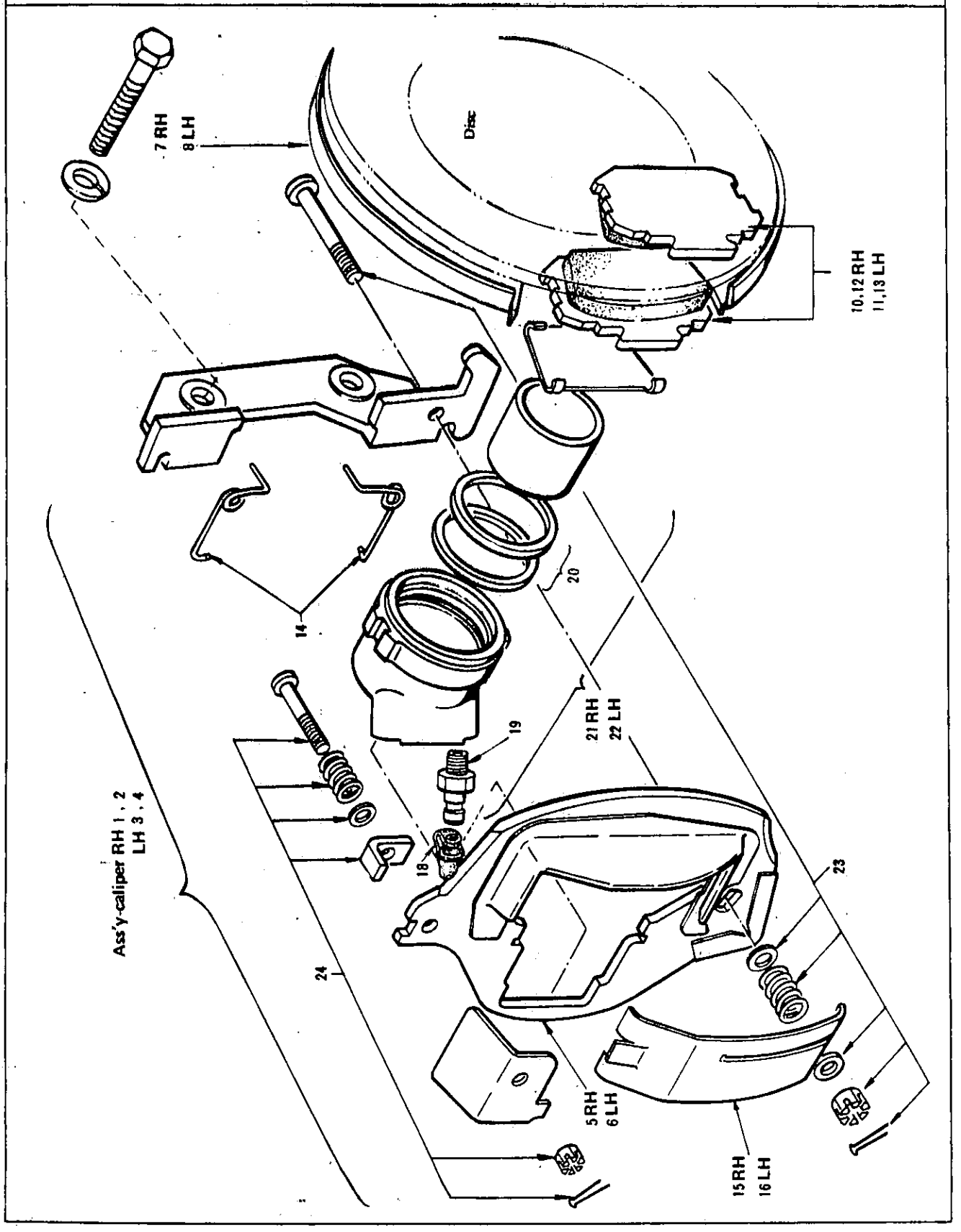

S	KEY NO.	PART NO.	PART NAME	Q'TY	SALES UNIT	MODEL	ICA
			FRONT BRAKE (DISC) (1.6 L)				
*	1	41000-16506	ASSY-CALIPER,FRONT BRAKE R.H.	1		1.6L 411	
	2	41000-16508	ASSY-CALIPER,FRONT BRAKE R.H.	1	1	1.6L 411	Y
*	3	41010-16505	ASSY-CALIPER,FRONT BRAKE L.H.	1	1	1.6L 411	
	4	41010-16508	ASSY-CALIPER,FRONT BRAKE L.H.	1	1	1.6L 411	Y
	5	41025-16505	ASSY-PLATE,CALIPER R.H	1	10	1.6L 411	
	6	41035-16505	ASSY-PLATE,CALIPER L.H	1	1	1.6L 411	
	7	41021-16505	ASSY-PLATE,BAFFLE R.H.	1	1	1.6L 411	
	8	41031-16505	ASSY-PLATE,BAFFLE L.H.	1	1	1.6L 411	
*	9	41080-16505	SET-PAD,FRONT BRAKE(INC.INSIDE&OUTSIDE)	2	10	1.6L 411	
*	10	41060-16505	ASSY-PAD,FRONT BRAKE RH(M78)	2		1.6L 411	C
*	11	41070-16505	ASSY-PAD,FRONT BRAKE L.H.(M78)	2		1.6L 411	C
	12	41060-16508	ASSY-PAD,FRONT BRAKE R.H.(M78S)	2		1.6L 411	C
	13	41070-16508	ASSY-PAD,FRONT BRAKE L.H.(M78S)	2		1.6L 411	C
	14	41088-16505	SET-SPRING(INC.A&B SPRING)	2	5	1.6L 411	
	15	41087-16505	ASSY-CLIP,ANTI-RATTLE L.H.	1	5	1.6L 411	
*	16	41086-16505	ASSY-CLIP,ANTI-RATTLE R.H.	1	5	1.6L 411	

Printed in Japan

REVISED: SEPTEMBER,1968

S	KEY NO.	PART NO.	PART NAME	Q'TY	SALES UNIT	MODEL	ICA
	17	41085-16505	SHIM	2	5	1.6L 411	
	18	41129-16505	CAP-BLEEDER,SCREW	2	10	1.6L 411	
	19	41128-16505	SCREW-BLEEDER	2	10	1.6L 411	
	20	41124-16505	SET-SEALS,PISTON(INC.PISTON SEAL,WIPER SEAL,RETAINER)	2		1.6L 411	
	21	41100-16505	ASSY-CYLINDER&PISTON R.H.	1	1	1.6 411	
	22	41110-16505	ASSY-CYLINDER&PISTON L.H.	1	1	1.6L 411	
	23	41041-16505	ASSY-PIN,PIVOT	2	1	1.6L 411	
	24	41040-16505	ASSY-PIN,HOLD DOWN	2	1	1.6L 411	

Printed in Japan

REVISED: SEPTEMBER,1968

NOTE

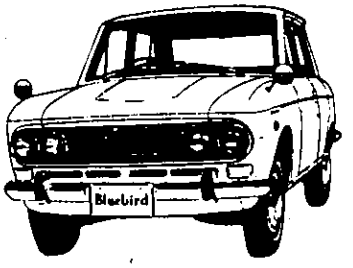

REAR BRAKE

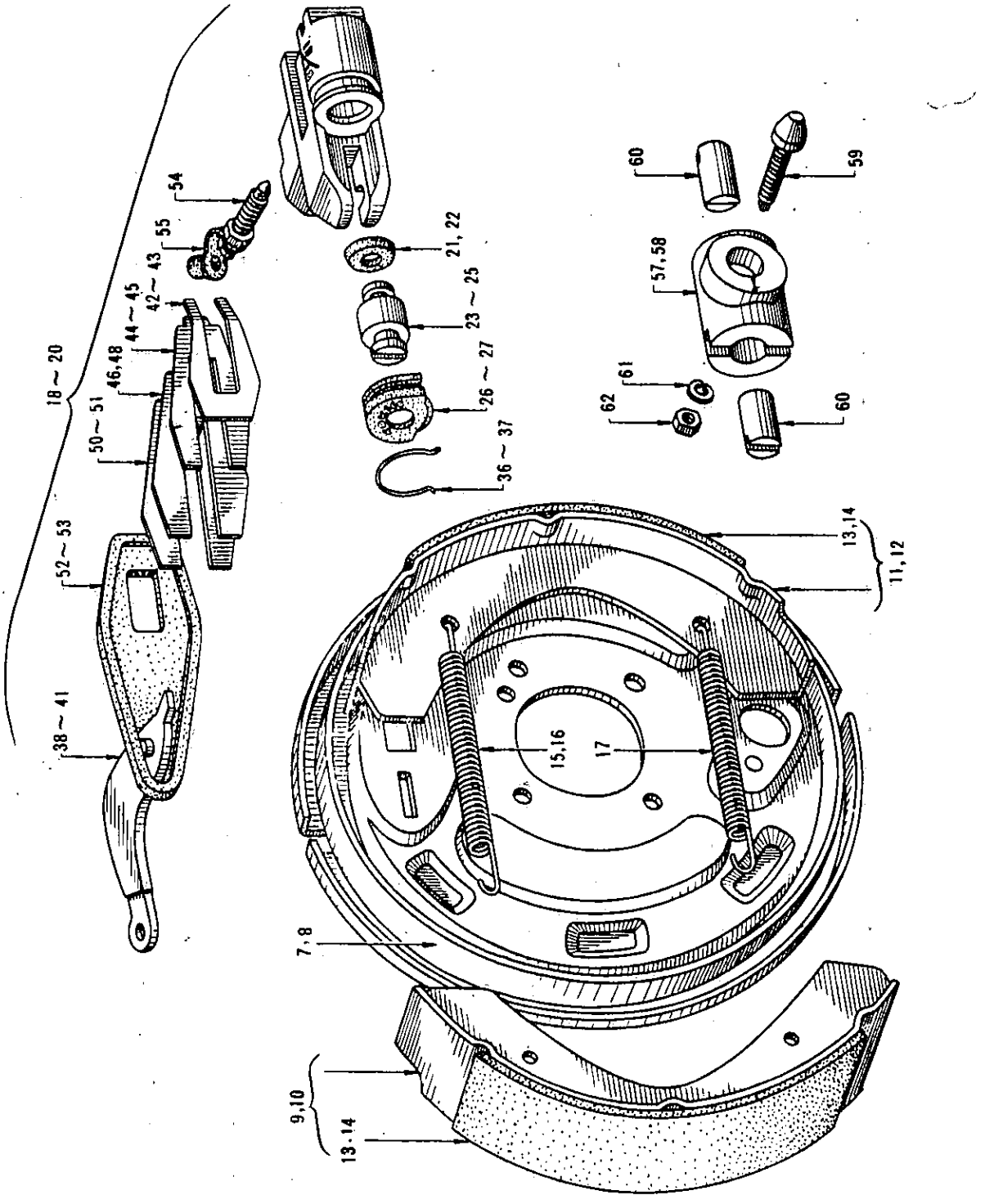
18 ~ 20
50 ~ 51
46,48
44 ~ 45
42 ~ 43
55
54
52 ~ 53
38 ~ 41
21, 22
23 ~ 25
26 ~ 27
36 ~ 37
60
59
57,58
61
62
60
13,14
11,12
15,16
17
7,8
9,10
13,14

S	KEY NO.	PART NO.	PART NAME	Q'TY	SALES UNIT	MODEL	ICA
			REAR BRAKE				
	1	44000-10600	ASSY-BRAKE,REAR(15/16",R.H.)(TO SEP-66)	1	1	1.3L 411	
	2	44000-19400	ASSY-BRAKE,REAR(15/16",R.H.)(FROM OCT.-66)	1	1	1.3L 411	Y
	3	44000-18800	ASSY-BRAKE,REAR(11/16",R.H.)	1	1	1.6L 411	
	4	44010-10600	ASSY-BRAKE,REAR(15/16",L.H.)(TO SEP-66)	1	1	1.3L 411	
	5	44010-19400	ASSY-BRAKE,REAR(15/16",L.H.)(FROM OCT.-66)	1	1	1.3L 411	Y
	6	44010-18800	ASSY-BRAKE,REAR(11/16",L.H.)	1	1	1.6L 411	
	7	44020-10600	ASSY-DISC,REAR BRAKE(R.H.)	1	1	411	
	8	44030-10600	ASSY-DISC,REAR BRAKE(L.H.)	1	1	411	
*	9	44060-10500	ASSY-SHOE,REAR BRAKE,FORE	2	1	1.3L 411	
	10	44060-17100	ASSY-SHOE,REAR BRAKE,FORE	2		1.6L 411	
*	11	44070-10500	ASSY-SHOE,REAR BRAKE,AFTER	2	1	1.3L 411	
	12	44070-17100	ASSY-SHOE,REAR BRAKE,AFTER	2		1.6L 411	
	13	41066-10500	LINING-BRAKE	4	1	1.3L 411	
	14	41066-17100	LINING-BRAKE	4		1.6L 411	
	15	44070-30001	SPRING-RETURN,BRAKE SHOE,CYLINDER SIDE	2		1.3L 411	
	16	44090-16505	SPRING-RETURN,BRAKE SHOE,CYLINDER SIDE	2	10	1.6L 411	

REVISED: SEPTEMBER,1968

Printed in Japan

S	KEY NO.	PART NO.	PART NAME	Q'TY	SALES UNIT	MODEL	ICA
	17	44071-30001	SPRING-RETURN,BRAKE SHOE,ADJUSTING SIDE	2	20	1.3L 411	
	18	44100-10600	ASSY-CYLINDER,REAR WHEEL(15/16")(NABCO/TOKICO)(TO SEP-66)	2	1	1.3L 411	
	19	44100-18400	ASSY-CYLINDER,REAR WHEEL(15/16")(NABCO/TOKICO)(FROM OCT.-66)	2	1	1.3L 411	N
	20	44100-18800	ASSY-CYLINDER,REAR WHEEL(11/16")(NABCO/TOKICO)	2		1.6L 411	
	21	44114-10501	CUP-PISTON	2	5	1.3L 411	
	22	44112-18800	CUP-PISTON	2	50	1.6L 411	
	23	44110-10610	PISTON-CYLINDER,REAR WHEEL(TOKICO)	2		1.3L 411	
	24	44110-10501	PISTON-CYLINDER,REAR WHEEL(NABCO)	2	10	1.3L 411	
	25	44108-18800	PISTON-CYLINDER,REAR WHEEL(NABCO)	2	5	1.6L 411	
	26	44124-31710	COVER-DUST,A(TOKICO)	2	10	411	
	27	44124-31700	COVER-DUST,A(NABCO)	2	10	411	
	28	44100-10625	KIT-REPAIR"A",WHEEL CYLINDER(NABCO)(INC.8,12,14,26,28)	1	1	1.3L 411	
	29	44100-10626	KIT-REPAIR"B",WHEEL CYLINDER(NABCO)(INC.8,10,12,14,26,28)	1	1	1.3L 411	
	30	44100-10627	KIT-REPAIR"A",WHEEL CYLINDER(TIKICO)(INC.8,11,13,25,28)	1	1	1.3L 411	
	31	44100-10628	KIT-REPAIR"B",WHEEL CYLINDER(TOKICO)(INC.8,9,11,13,25,28)	1		1.3L 411	
	32	44100-18825	KIT-REPAIR"A"WHEEL CYLINDER (11/16")(NABCO)(INC.8,12,14,26,28)	1		1.6L 411	

Printed in Japan

REVISED: SEPTEMBER,1968

S	KEY NO.	PART NO.	PART NAME	Q'TY	SALES UNIT	MODEL	ICA
	33	44100-18826	KIT-REPAIR"B"WHEEL CYLINDER(11/16")(NABCO)(INC.8,10,12,14,26,28)	1		1.6L 411	
	34	44100-18827	KIT-REPAIR"A"WHEEL CYLINDER(11/16")(TOKICO)(INC.8,11,13,25,28)	1		1.6L 411	
	35	44100-18828	KIT-REPAIR"B"WHEEL CYLINDER(11/16")(TOKICO)(INC,8,9,11,13,25,28)	1	1	1.6L 411	
	36	44113-31710	RING-SNAP(TOKICO)	2	10	411	
	37	44113-31700	RING-SNAP(NABCO)	2	10	411	
	38	44118-30011	ASSY-LEVER(TOKICO)(TO SEP-66)	2	10	411	
	39	44118-18410	ASSY-LEVER(TOKICO)(FROM OCT.-66)	2	5	411	Y
	40	44118-30001	ASSY-LEVER(NABCO)(TO SEP-66)	2	1	411	
	41	44118-18800	ASSY-LEVER(NABCO)(FROM OCT.-66)	2	10	411	Y
	42	44141-31710	SHIM-ADJUSTING,A(TIKICO)	2		411	
	43	44141-31700	SHIM-ADJUSTING,A(NABCO)	2	10	411	
	44	44142-31710	SHIM-ADJUSTING,B(TOKICO)	2		411	
	45	44142-31700	SHIM-ADJUSTING,B(NABCO)	2	10	411	
	46	44149-31710	PLATE-A(TOKICO)(TO SEP-66)	2	10	411	
	47	44149-18410	PLATE-RETAINER(TOKICO)(FROM OCT-66)	2	10	411	C
	48	44150-31710	PLATE-B(TOKICO)(TO SEP-66)	2	1	411	
	49	44149-18410	PLATE-RETAINER(TOKICO)(FROM OCT.-66)	2	10	411	C

Printed in Japan

REVISED: SEPTEMBER,1968

S	KEY NO.	PART NO.	PART NAME	Q'TY	SALES UNIT	MODEL	ICA
	50	44149-31700	PLATE-A(NABCO)	2	5	411	
	51	44150-31700	PLATE-B(NABCO)	2	10	411	
	52	44144-10610	COVER-DUST,B(TOKICO)	2	10	411	
	53	44144-31700	COVER-DUST,B(NABCO)	2	1	411	
	54	41128-30001	SCREW-BLEEDER	2		411	
	55	41129-30001	CAP-BLEEDER	2		411	
	56	44200-18400	ASSY-ADJUSTER,REAR BRAKE	2	1	411	
*	57	44081-04100	ASSY-HOUSING,BRAKE SHOE ADJUSTER	2	10	411	
	58	44202-18400	ASSY-HOUSING,BRAKE SHOE ADJUSTER	2	1	411	Y
	59	44084-30000	WEDGE-ADJUSTER	2	5	411	
	60	44205-10500	TAPPET-ADJUSTER	4	10	411	
	61	00915-11410	WASHER-LOCK	4		411	
	62	00911-14410	NUT	4		411	

Printed in Japan

REVISED: SEPTEMBER,1968

NOTE

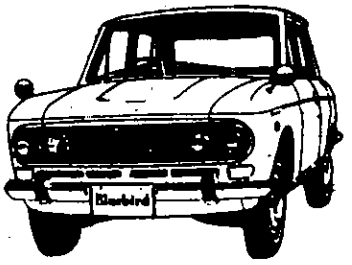

BRAKE PIPING

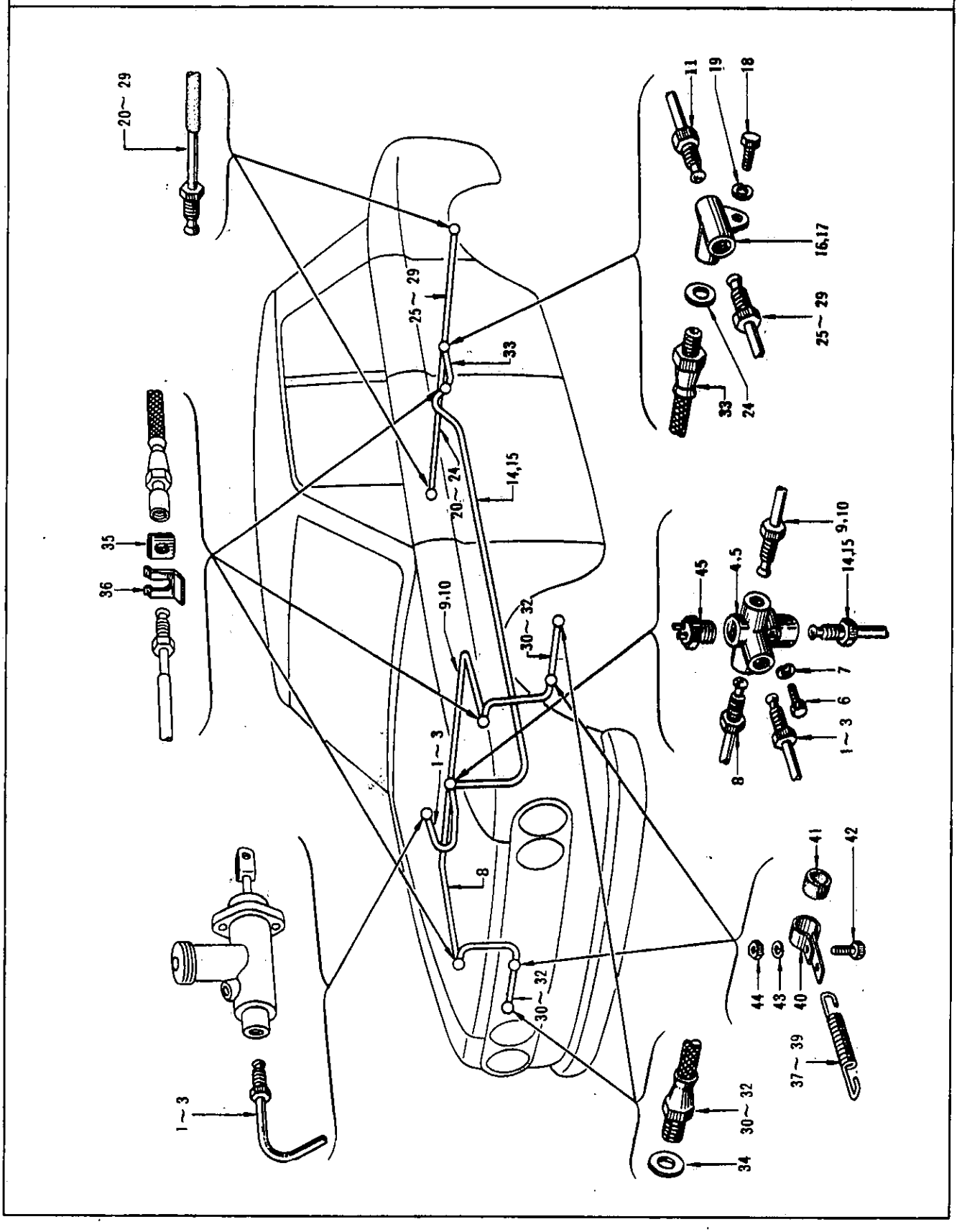

S	KEY NO.	PART NO.	PART NAME	Q'TY	SALES UNIT	MODEL	ICA
			BRAKE PIPING				
	1	46223-10601	ASSY-TUBE BRAKE MASTER CYLINDER TO CONNECTOR	1	5	R DRIVE '41 1	
	2	46223-15800	ASSY-TUBE BRAKE MASTER CYLINDER TO CONNECTOR	1	5	1.6L 411	
	3	46223-10801	ASSY-TUBE BRAKE MASTER CYLINDER TO CONNECTOR	1	1	L DRIVE 411 (EXC. 1.6L)	
	4	46234-10600	CONNECTOR-5 WAY	1		411	
	5	46234-10601	CONNECTOR-5 WAY	1	1	411	Y
	6	00114-43010	BOLT TO FIX T WAY CONNECTOR	1	50	411	
	7	00915-11410	WASHER-LOCK TO FIX T WAY CONNECTOR	1		411	
	8	46240-10651	ASSY-TUBE(R.H.)5 WAY CONNECTOR TO FRONT BRAKE HOSE	1	1	411	
*	9	46242-10650	ASSY-TUBE(L.H.)5 WAY CONNECTOR TO FRONT BRAKE HOSE	1	1	1.3L 411	
	10	46242-15800	ASSY-TUBE(L.H.)5 WAY CONNECTOR TO FRONT BRAKE HOSE	1	1	1.6L 411	
*	11	46345-10601	BRACKET-BRAKE HOSE(TO MAR-66)	2	5	411	
	12	46345-18400	BRACKET-BRAKE HOSE(FROM APR.-'66)	2	5	411	N
	13	00951-10800	GROMMET	2	10	411	
	14	46280-10600	ASSY-TUBE,5 WAY CONNECTOR TO REAR BRAKE HOSE	1	2	411 EXC. RL-UAK,WRL-UAK	
	15	46280-20200	ASSY-TUBE,5 WAY CONNECTOR TO REAR BRAKE HOSE	1		411 RL-UAK,WRL-UAK	

REVISED: SEPTEMBER,1968

Printed in Japan

S	KEY NO.	PART NO.	PART NAME	QTY	SALES UNIT	MODEL	ICA
◦	16	46357-35000	CONNECTOR-3 WAY	1	2	411	
	17	46357-35001	CONNECTOR-3 WAY	1	1	411	Y
	18	00111-51610	BOLT TO FIX 3 WAY CONNECTOR	1		411	
	19	00915-11510	WASHER-LOCK TO FIX 3 WAY CONNECTOR	1		411	
◦	20	46290-10600	ASSY-TUBE(R.H.)	1	10	1.3L 411	
◦	21	46290-18400	ASSY-TUBE(R.H.)(TO SEP-66)	1	5	1.3L 411	Y
	22	46290-18401	ASSY-TUBE(FROM OCT.-'66)	1		1.3L 411	Y
	23	46290-15800	ASSY-TUBE(R.H.)	1	5	1.6L 411	
	24	46290-18800	ASSY-TUBE(R.H.)3 WAY CONNECTOR TO REAR CYLINDER	1	5	1.6L 411	Y
◦	25	46310-10600	ASSY-TUBE(L.H.)3 WAY CONNECTOR TO REAR CYLINDER	1	1	1.3L 411	
◦	26	46310-18400	ASSY-TUBE(L.H.)(TO SEP-66)3 WAY CONNECTOR TO REAR CYLINDER	1		1.3L 411	Y
	27	46310-18401	ASSY-TUBE(L.H.)(FROM OCT.-'66)	1		1.3L 411	Y
	28	46310-15800	ASSY-TUBE(L.H.)	1	1	1.6L 411	
	29	46310-18800	ASSY-TUBE(L.H.)	1	2	1.6L 411	Y
	30	46201-61000	ASSY-HOSE,BRAKE FRONT(R.H.)(FROM C/# 022873)	2	1	1.3L 411	
	31	46201-61000	ASSY-HOSE,BRAKE FRONT(R.H.)(FROM C/# 022873)	1	1	1.6L 411	
	32	46201-15800	ASSY-HOSE,BRAKE,FRONT(L.H.)	1	2	1.6L 411	
	33	46201-61001	ASSY-HOSE,BRAKE(L=400MM)	1	2	411	
	34	46237-30000	GASKET	3		411	

Printed in Japan

REVISED: SEPTEMBER,1968

S	KEY NO.	PART NO.	PART NAME	Q'TY	SALES UNIT	MODEL	ICA
	35	46205-61000	PLATE-LOCK,BRAKE HOSE	3	5	411	
	36	46206-61000	SPRING-LOCK,BRAKE HOSE	3		411	
	37	46361-61000	SPRING-BRAKE HOSE(R.H.)	2	10	1.3L 411	
	38	46361-61000	SPRING-BRAKE HOSE(R.H.)	1	10	1.6L 411	
	39	46361-15800	SPRING-BRAKE HOSE(L.H.)	1	10	1.6L 411	
	40	46362-08500	CLAMP-BRAKE HOSE	2	10	411	
	41	46363-08500	RUBBER-PROTECT,BRAKE HOSE	2	10	411	
	42	00319-01010	SCREW	2		411	
	43	00915-11010	WASHER-LOCK	2	100	411	
	44	00911-14010	NUT	2		411	
*	45	25320-02700	COMP.-SWITCH,STOP LAMP	1	10	411	

Printed in Japan

REVISED: SEPTEMBER,1968

NOTE

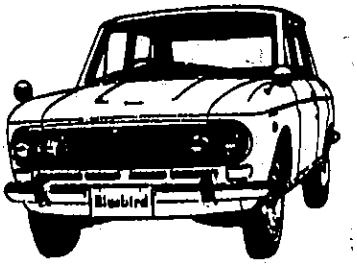

NOTE

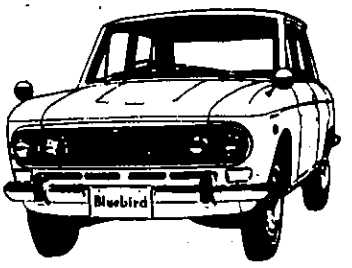

HAND BRAKE CONTRL

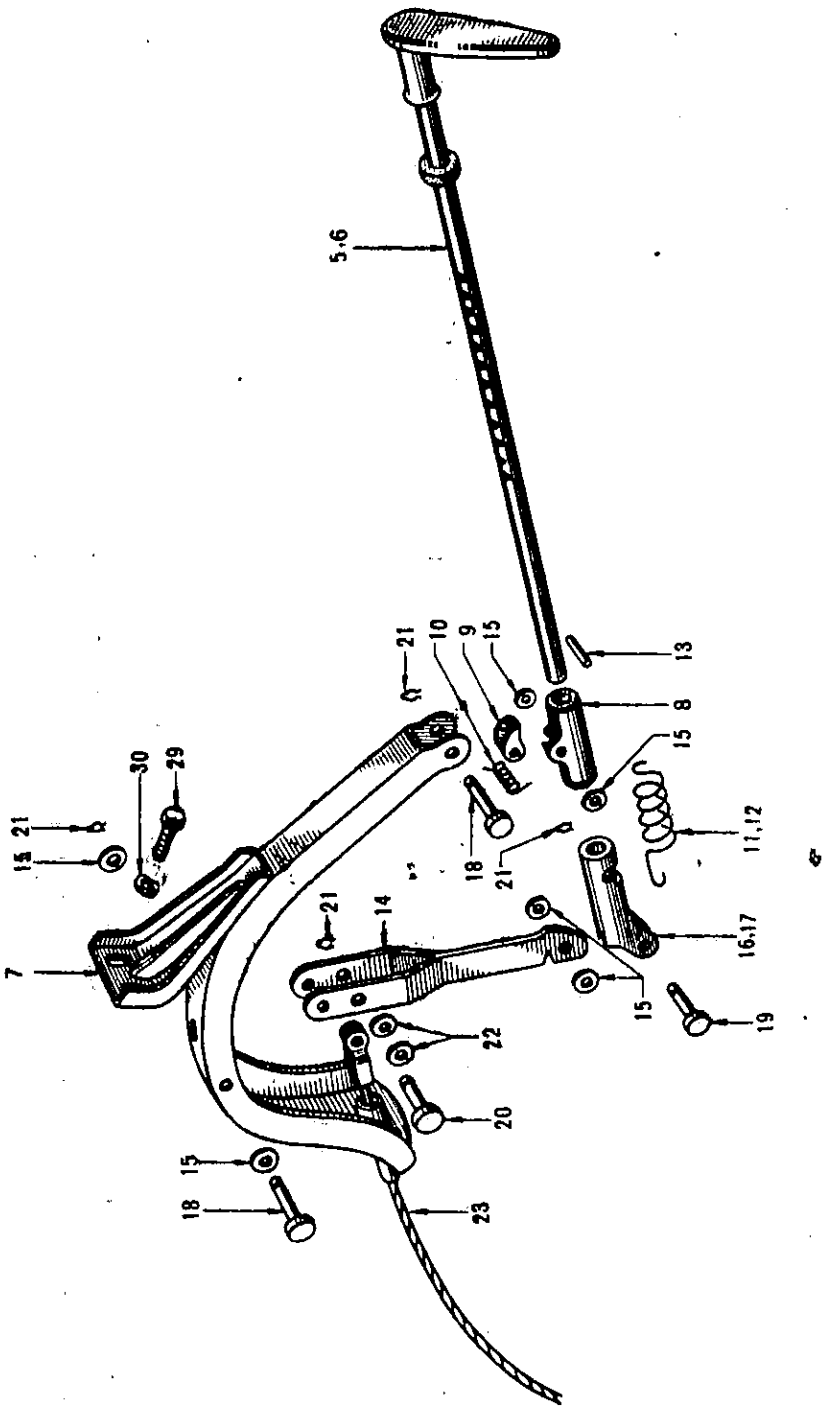

S	KEY NO.	PART NO.	PART NAME	Q'TY	SALES UNIT	MODEL	ICA
			HAND BRAKE CONTRL				
	1	36010-10600	ASSY-CONTROL,HAND BRAKE	1		R DRIVE 411	
◦	2	36010-10800	ASSY-CONTROL,HAND BRAKE	1	1	1.3L L DRIVE 411	
◦	3	36010-10800	ASSY-CONTROL,HAND BRAKE	1	1	1.6L L DRIVE 411	
	4	36010-18910	ASSY-CONTROL,HAND BRAKE	1		1.6L L DRIVE 411	N
	5	36326-10600	COMP.-STEM,HAND BRAKE CONTROL	1	1	R DRIVE 411	
	6	36326-10800	COMP.-STEM,HAND BRAKE CONTROL	1	1	L DRIVE 411	
◦	7	36328-10601	ASSY-BRACKET,HAND BRAKE CONTROL	1		411	
	8	36335-36700	ASSY-GUIDE,HAND BRAKE CONTROL	1		411	
	9	36320-36700	NAIL-RATCHET,HAND BRAKE CONTROL	1		411	
	10	36330-36700	SPRING-NAIL,HAND BRAKE CONTROL	1	5	411	
	11	36337-10600	SPRING-SET,HAND BRAKE LEVER	1	5	R DRIVE 411	
	12	36337-36700	SPRING-SET,HAND BRAKE LEVER	1		L DRIVE 411	
	13	36338-36700	PIN-SET SPRING,HAND BRAKE LEVER	1	10	411	
	14	36372-10600	ASSY-LEVER,HAND BRAKE CONTROL	1	1	411	
◦	15	36373-10600	WASHER(NYLON)	6		411	
	16	36339-10600	YOKE-HAND BRAKE CONTROL	1	2	R DRIVE 411	

Printed in Japan
REVISED: SEPTEMBER,1968

S	KEY NO.	PART NO.	PART NAME	Q'TY	SALES UNIT	MODEL	ICA
	17	36339-10800	YOKE-HAND BRAKE CONTROL	1	1	L DRIVE 411	
	18	36377-10600	PIN-CLEVIS	2	10	411	
	19	36378-10600	PIN-CLEVIS	1	10	411	
	20	36379-10600	PIN-CLEVIS	1	10	411	
	21	46124-35100	SPRING-RETAINER	4	10	411	
	22	36374-10600	SPACER(NYLON)	2	10	411	
	23	36402-10601	CABLE-FRONT,HAND BRAKE	1		R DRIVE 411	
*	24	36402-10800	ASSY-CABLE,FRONT	1	5	L DRIVE 411	
*	25	36402-10801	ASSY-CABLE,FRONT	1	10	L DRIVE 411	Y
*	26	36402-10801	ASSY-CABLE,FRONT	1	10	1.3L L DRIVE 411	
*	27	36402-10801	ASSY-CABLE,FRONT	1	10	1.6L L DRIVE 411	
	28	36402-18910	ASSY-CABLE,FRONT	1		1.6L L DRIVE 411	Y
	29	00114-41210	BOLT TO FIX HAND BRAKE BRACKET	5		411	
	30	00915-21410	WASHER-LOCK TO FIX HAND BRAKE BRACKET	5		411	

Printed in Japan

REVISED: SEPTEMBER,1968

NOTE

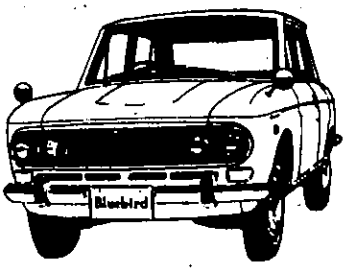

HAND BRAKE LINKAGE

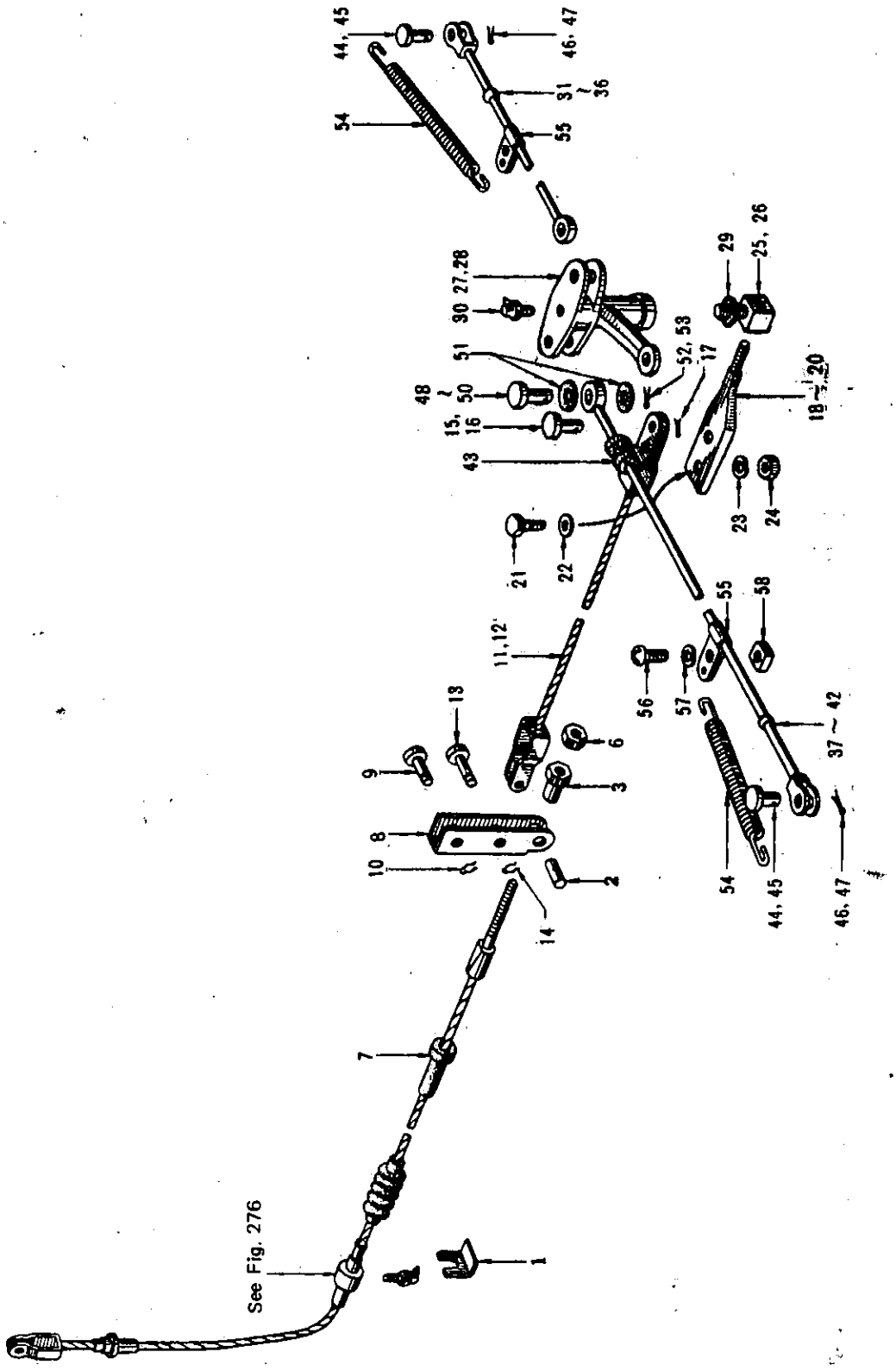

S	KEY NO.	PART NO.	PART NAME	Q'TY	SALES UNIT	MODEL	ICA
			HAND BRAKE LINKAGE				
*	1	36406-32200	PLATE-LOCK,HAND BRAKE CABLE	1	1	411	
	2	36408-36700	TRUNNION-PIN,HAND BRAKE CABLE TO LEVER	1		411	
	3	36437-36700	NUT-ADJUSTING,HAND BRAKE CABLE	1	10	411	
	4	36409-10800	CLIP-HAND BRAKE CABLE, FRONT	1	10	L DRIVE 411	
	5	36409-10801	CLIP-HAND BRAKE CABLE, FRONT	1	10	L DRIVE 411	Y
	6	00911-34410	NUT-LOCK	1		411	
	7	36482-10600	GUIDE-CABLE,HAND BRAKE ,FRONT	1	5	411	
	8	36510-10600	ARM-SWING,HAND BRAKE	1	1	411	
	9	36377-10600	PIN-CLEVIS TO FIX SWING ARM TO BRACKET	1	10	411	
	10	46124-35100	RETAINER-SPRING TO FIX SWING ARM TO BRACKET	1	10	411	
	11	36451-10600	ASSY-CABLE,HAND BRAKE AFTER.	1	5	1.3L 411	
	12	36451-15800	ASSY-CABLE,HAND BRAKE AFTER.	1	5	1.6L 411	
	13	36378-36700	PIN-CLEVIS TO FIX SWING ARM TO CABLE	1	10	411	
	14	46124-35100	RETAINER-SPRING TO FIX SWING ARM TO CABLE	1	10	411	
*	15	36541-30000	PIN-CLEVIS TO FIX CABLE TO BALANCE LEVER	1	50	411	
	16	36541-24000	PIN-COTTER TO FIX CABLE TO BALANCE LEVER	1	50	411	Y

Printed in Japan

REVISED: SEPTEMBER,1968

S	KEY NO.	PART NO.	PART NAME	Q'TY	SALES UNIT	MODEL	ICA
	17	00921-11810	PIN-COTTER TO FIX CABLE TO BALANCE LEVER	1	50	411	
	18	36510-30000	COMP.-SUPPORT,BALANCE LEVER(TO C/# PL411-13380,P411-58503)	1	10	1.3L 411	
	19	36511-10600	COMP.-SUPPORT,BALANCE LEVER(FROM C/# PL411-13381,P411-58504)	1	1	1.3L 411	N
	20	36511-15800	COMP.-SUPPORT,BALANCE LEVER	1	10	1.6L 411	
	21	00124-52010	BOLT	2		411	
	22	36513-09400	WASHER-PLAIN	2	5	411	
	23	00915-21510	WASHER-LOCK	2		411	
	24	00911-14510	NUT	2		411	
*	25	36514-10600	CARRIER-BALANCE LEVER(TO PL411-13380,P411-58503)	1	5	411	
	26	36514-10601	CARRIER-BALANCE LEVER(FROM C/# PL411-13381,P411-58504)	1	5	411	N
*	27	36518-10600	LEVER-BALANCE,HAND BRAKE(TO C/# PL411-13380,P411-58503)	1		411	
*	28	36518-10602	LEVER-BALANCE,HAND BRAKE(FROM C/# PL411-13381,P411-58504)	1		411	N
*	29	32523-30000	FELT-RING	1	1	411	
	30	00932-30200	NIPPLE-GREASE	1	50	411	
	31	36530-10650	ROD-CROSS,HAND BRAKE SHORT(TO C/# P411-58503,PL411-13380)	1	1	R DRIVE 411	
	32	36530-10651	ROD-CROSS,HAND BRAKE SHORT(FROM C/# P411-58504,PL411-13381)	1		R DRIVE 411	N
	33	36530-10602	ROD-CROSS,HAND BRAKE SHORT(FROM OCT.-'66)	1	1	R DRIVE 411	N

Printed in Japan

REVISED: SEPTEMBER,1968

S	KEY NO.	PART NO.	PART NAME	Q'TY	SALES UNIT	MODEL	ICA
	34	36530-10850	ROD-CROSS,HAND BRAKE SHORT(TO C/# P411-58503,PL411-13380)	1	10	L DRIVE 411(EXC.1.6L)	
	35	36530-10851	ROD-CROSS,HAND BRAKE SHORT(FROM C/# P411-58504,PL411-13381)	1	1	L DRIVE 411(EXC.1.6L)	N
	36	36530-10802	ROD-CROSS,HAND BRAKE SHORT(FROM OCT.-'66)	1	10	L DRIVE 411(EXC.1.6L)	N
	37	36531-10650	ROD-CROSS,HAND BRAKE LONG(TO C/# P411-58503,PL411-13380)	1	1	R DRIVE 411	
*	38	36531-10651	ROD-CROSS,HAND BRAKE LONG(FROM C/# P411-58504,PL411-13381)	1		R DRIVE 411	N
	39	36531-10602	ROD-CROSS,HAND BRAKE LONG(FROM OCT.-'66)	1	1	R DRIVE 411	N
	40	36531-10850	ROD-CROSS,HAND BRAKE LONG(TO C/# P411-58503,PL411-13380)	1	10	L DRIVE 411(EXC.1.6L)	
*	41	36531-10851	ROD-CROSS,HAND BRAKE LONG(FROM C/# P411-58504,PL411-13381)	1	1	L DRIVE 411(EXC.1.6L)	N
	42	36531-10802	ROD-CROSS,HAND BRAKE LONG(FROM OCT.-'66)	1	10	L DRIVE 411(EXC.1.6L)	N
	43	36537-30000	FERRULE-CROSS ROD(RUBBER)	1	100	411	
*	44	36541-30000	PIN-CLEVIS TO FIX CROSS ROD TO WHEEL CYLINDER LEVER	2	50	411	
	45	36541-24000	PIN-CLEVIS TO FIX CROSS ROD TO WHEEL CYLINDER LEVER	2	50	411	Y
*	46	00921-11800	PIN-COTTER TO FIX CROSS ROD TO WHEEL CYLINDER LEVER	2	50	411	

Printed in Japan

REVISED: SEPTEMBER,1968

S	KEY NO.	PART NO.	PART NAME	Q'TY	SALES UNIT	MODEL	ICA
	47	00921-01810	PIN-COTTER TO FIX CROS S ROD TO WHEEL CYLINDE R LEVER	2		411	N
	48	36538-30000	PIN-CLEVIS FIX ROD TO LEVER(TO C/# SEE FIG 277)	2	20	411	
	49	36541-30000	PIN-CLEVIS FIX ROD TO LEVER(FROM C/# SEE FIG 277)	2	50	411	N
	50	36541-24000	PIN-CLEVIS TO FIX CROS S RO TO BALANCE LEVER	2	50	411	Y
	51	36543-30000	RING-FELT TO FIX CROSS RO TO BALANCE LEVER	4	10	411	
	52	00921-01810	PIN-COTTER TO FIX CROS S ROD TO BALANCE LEVER	2	50	411	
	53	00921-32010	PIN-COTTER TO FIX CROS S ROD TO BALANCE LEVER	2	50	411	
	54	36545-30000	SPRING-PULL OFF,CROSS ROD	2	10	411	
	55	36544-30000	BRACKET-HANGER,CROSS R OD	2	10	411	
	56	00314-01010	SCREW TO FIX BRACKET	2	50	411	
	57	00915-11010	WASHER-LOCK TO FIX BRA CKET	2	100	411	
	58	00913-14010	NUT TO FIX BRACKET	2	10	411	

Printed in Japan

REVISED: SEPTEMBER,1968

NOTE

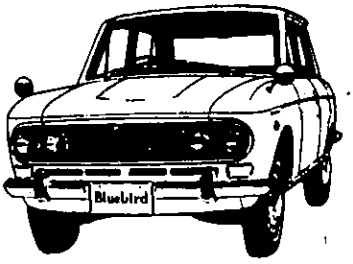

FRONT SUSPENSION LINK

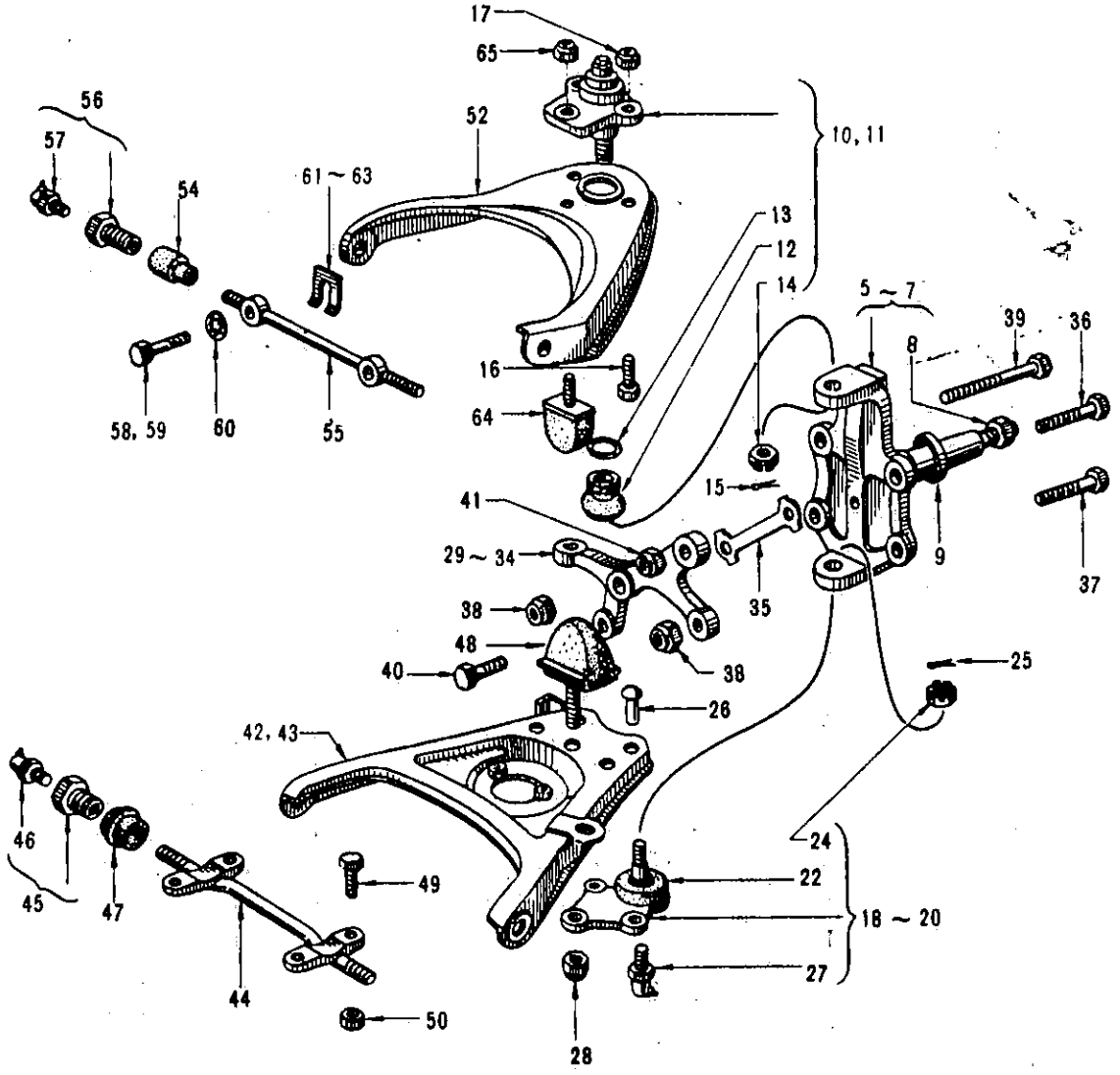

S	KEY NO.	PART NO.	PART NAME	Q'TY	SALES UNIT	MODEL	ICA
			FRONT SUSPENSION LINK				
	1	40000-16550	ASSY-AXLE,FRONT	1	1	1.3L R DRIVE 411 (EXC.UTK)	
	2	40000-17050	ASSY-AXLE,FRONT	1		1.3L L DRIVE 411	
	3	40000-16750	ASSY-AXLE,FRONT	1		411 UTK	
	4	40000-16555	ASSY-AXLE,FRONT	1	1	1.6L 411	
	5	40014-10650	ASSY-SPINDLE,KNUCKLE,WITH NUT(R.H.)	1	1	411	
	6	40015-10650	ASSY-SPINDLE,KNUCKLE,WITH NUT(L.H.)	1	1	411	
	7	40014-16555	ASSY-SPINDLE,KNUCKLE,WITH NUT	2	1	1.6L 411	
	8	40040-04100	NUT-KNUCKLE SPINDLE	2	50	411	
	9	40029-25660	COLLAR-FRONT SPINDLE	2		411	
*	10	40110-16500	ASSY-JOINT,BALL,UPPER,FRONT SUSPENSION	2		411	
	11	40110-16501	ASSY-JOINT,BALL,UPPER,FRONT SUSPENSION	2	1	411	Y
	12	40142-16501	COVER-DUST,UPPER BALL JOINT	2	5	411	
	13	40081-04100	CLAMP-DUST COVER	2	50	411	
	14	00911-84710	NUT	2		411	
*	15	00921-32500	PIN-COTTER	2	50	411	
	16	00124-52510	BOLT TO FIX UPPER BALL JOINT	4	50	411	
	17	00912-44510	NUT TO FIX UPPER BALL JOINT	6	50	411	

REVISED: SEPTEMBER,1968

Printed in Japan

S	KEY NO.	PART NO.	PART NAME	Q'TY	SALES UNIT	MODEL	ICA
*	18	40160-16500	ASSY-JOINT,BALL,LOWER(R.H.)	1	1	411	
	19	46160-24000	ASSY-JOINT,BALL,LOWER(R.H.)	1		411	Y
*	20	40161-16500	ASSY-JOINT,BALL,LOWER(L.H.)	1		411	
	21	40161-24000	ASSY-JOINT,BALL,LOWER(L.H.)	1	1	411	Y
	22	40192-16501	COVER-DUST,LOWER BALL JOINT,	2	1	411	
	23	40096-10601	CLAMP-COVER,LOWER BALL JOINT	2	10	411	
	24	00911-84810	NUT	2	20	411	
*	25	00921-32500	PIN-COTTER	2	50	411	
	26	00912-44510	NUT TO FIX LOWER BALL JOINT	4	50	411	
	27	00134-54010	BOLT(SERVICE)TO FIX LO WER BALL JOINT	4	50	411	
	28	00912-44610	NUT TO FIX LOWER BALL JOINT	4		411	
*	29	40052-10601	ARM-KNUCKLE(R.H.)	1	1	411	
	30	40052-16500	ARM-KNUCKLE(R.H.)(FROM APR.-'66)	1	1	1.3 411	Y
	31	40052-16505	ARM-KNUCKLE(R.H.)	1	1	1.6L 411	
*	32	40053-10601	ARM-KNUCKLE(L.H.)	1	1	411	
	33	40053-16500	ARM-KNUCKLE(L.H.)(FROM APR.-'66)	1	1	1.3 411	Y
	34	40053-16505	ARM-KNUCKLE(L.H.)	1	1	1.6L 411	
	35	40057-10601	PLATE-LOCK,KNUCKLE ARM	2	10	411	
	36	00134-65010	BOLT TO FIX KNUCKLE AR M	2	25	411	
	37	00134-66010	BOLT TO FIX KNUCKLE AR M	2	25	411	

Printed in Japan

REVISED: SEPTEMBER,1968

S	KEY NO.	PART NO.	PART NAME	Q'TY	SALES UNIT	MODEL	ICA
	38	00911-24610	NUT TO FIX KNUCKLE ARM	4	100	411	
	39	00134-64010	BOLT TO FIX KNUCKLE ARM	2	25	411	
	40	40038-10600	BOLT-STOPPER	2	10	411	
	41	00911-34610	NUT	2	50	411	
	42	54529-10603	ASSY-LINK,LOWER,FRONT SUSPENSION(R.H.)	1	1	411	
	43	54530-10603	ASSY-LINK,LOWER,FRONT SUSPENSION(L.H.)	1	1	411	
	44	54419-10600	SPINDLE-LOWER LINK	2	5	411	
	45	54504-10600	ASSY-BUSHING,LOWER LINK	4	10	411	
	46	00932-20200	NIPPLE-GREASE	4		411	
	47	54540-10601	SEAL-DUST,LOWER LINK BUSH	4	20	411	
	48	54050-10604	ASSY-BUMPER,REBOUND,FRONT SUSPENSION	2	1	411	
	49	54554-32200	BOLT	8	10	411	
	50	00911-24610	NUT	8	100	411	
	51	00915-21610	WASHER-LOCK	8		411	
	52	54533-10601	ASSY-LINK,UPPER,FRONT SUSPENSION(R.H.)	1		411	
	53	54534-10601	ASSY-LINK,UPPER,FRONT SUSPENSION(L.H.)	1		411	
	54	54541-10601	SEAL-DUST,UPPER LINK	4	20	411	
	55	54536-10600	SPINDLE-UPPER LINK	2	5	411	
	56	54507-10600	ASSY-BUSHING,UPPER LINK	4	10	411	
	57	00932-20200	NIPPLE-GREASE	4	100	411	
*	58	00124-74010	BOLT TO FIX UPPER SPINDLE	4	25	411	

REVISED: SEPTEMBER,1968

Printed in Japan

S	KEY NO.	PART NO.	PART NAME	Q'TY	SALES UNIT	MODEL	ICA
	59	00124-73510	BOLT TO FIX UPPER SPIN DLE	4	25	411	
	60	00916-21710	WASHER	4	50	411	
	61	54542-04101	SHIM-CAMBER A(1.0 T)US E FIT ONE	4	50	411	
	62	54543-04101	SHIM-CAMBER B(2.0 T)US E FIT ONE	4	2	411	
	63	54544-04101	SHIM-CAMBER C(1.0 T)US E FIT ONE	4	50	411	
◦	64	54051-10600	ASSY-STOPPER,REBOUND	2	10	411	
	65	00912-44510	NUT	2	50	411	

Printed in Japan

REVISED: SEPTEMBER,1968

NOTE

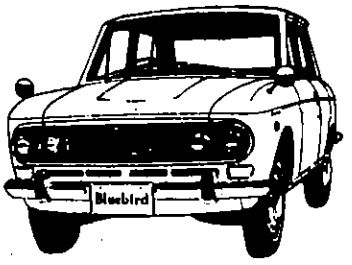

FRONT HUB & DRUM

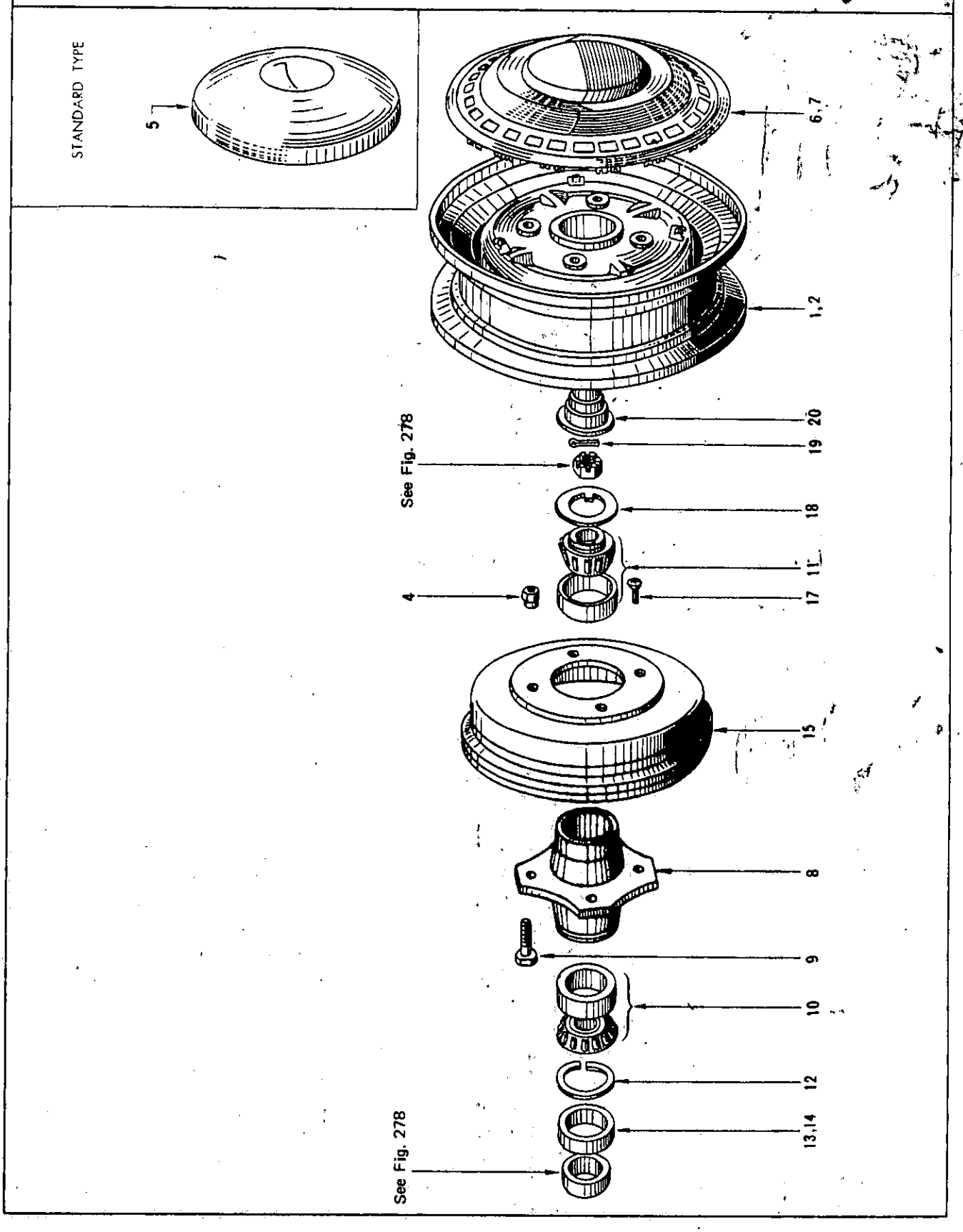

S	KEY NO.	PART NO.	PART NAME	QTY	SALES UNIT	MODEL	ICA
			FRONT HUB & DRUM				
	1	40300-10600	ASSY-WHEEL,ROAD 2.9T	5		1.3L 411	
	2	40300-10500	ASSY-WHEEL,ROAD 3.2T	5		1.6L 411	
	3	40307-10600	FASTENER-CAP,ROAD WHEEL	15	10	411	
*	4	40225-04100	NUT-ROAD WHEEL	16	10	411	
	5	40315-10600	CAP-ROAD WHEEL	4		411(A TYPE)	
*	6	40315-11401	COVER-ROAD WHEEL	4		411(B,C TYPE)	
	7	40315-16600	COVER-ROAD WHEEL	4		411(B,C TYPE)	Y
	8	40202-16550	ASSY-HUB,ROAD WHEEL,FRONT	2	1	411	
	9	40222-16500	BOLT-HUB,ROAD WHEEL	8	10	411	
	10	38440-14361	BEARING-FRONT WHEEL,INNER	2	1	411	
	11	40215-10360 ✗ Po/100 ✓	BEARING-FRONT WHEEL,OUTER	2	10	411	
	12	40231-04100	SPACER-OIL SEAL,FRONT HUB	2	10	411	
*	13	40227-08000	SEAL-OIL,FRONT HUB	2		411	
	14	40232-16500	SEAL-OIL,FRONT HUB	2	10	411	Y
*	15	40206-10501	DRUM-BRAKE	2		411	
	16	40207-10600	SPRING-BRAKE DRUM	2	10	411	
	17	00324-41410	SCREW	4		411	
	18	40037-04100	WASHER-FRONT WHEEL BEARING	2	40	411	
	19	00921-44000	PIN-COTTER	2	50	411	

Printed in Japan

REVISED: SEPTEMBER,1968

S	KEY NO.	PART NO.	PART NAME	Q'TY	SALES UNIT	MODEL	ICA
	20	40234-04100	CAP-HUB,FRONT WHEEL	2	10	411	
	21	40202-16555	ASSY-HUB,ROAD WHEEL,FRONT(FROM OCT-66)	2	1	1.6L 411	
	22	40221-14600	BOLT-HUB,ROAD WHEEL(FROM OCT-66)	8	10	1.6L 411	
	23	38440-14361	BEARING-FRONT WHEEL,INNER(FROM OCT-66)	2	1	1.6L 411	
	24	40215-10360	BEARING-FRONT WHEEL,OUTER(FROM OCT-66)	2	10	1.6L 411	
	25	40206-16505	ROTOR-DISC BRAKE,FRONT (FROM OCT-66)	2	1	1.6L 411	
	26	00915-11610	WASHER-LOCK(FROM OCT-66)	8		1.6L 411	
	27	40209-16505	BOLT-FIX,ROTOR FRONT(FROM OCT-66)	8	10	1.6L 411	
	28	40037-04100	WASHER-FRONT WHEEL BEARING(FROM OCT-66)	2	40	1.6L 411	
	29	40040-04100	NUT-SPINDLE,FRONT(FROM OCT-66)	2	50	1.6L 411	
	30	00921-43010	PIN-COTTER(FROM OCT-66)	2	50	1.6L 411	
	31	40234-04100	CAP-HUB,FRONT WHEEL(FROM OCT-66)	2	10	1.6L 411	

Printed in Japan

REVISED: SEPTEMBER,1968

NOTE

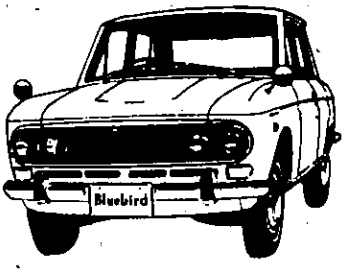

FRONT SUSPENSION

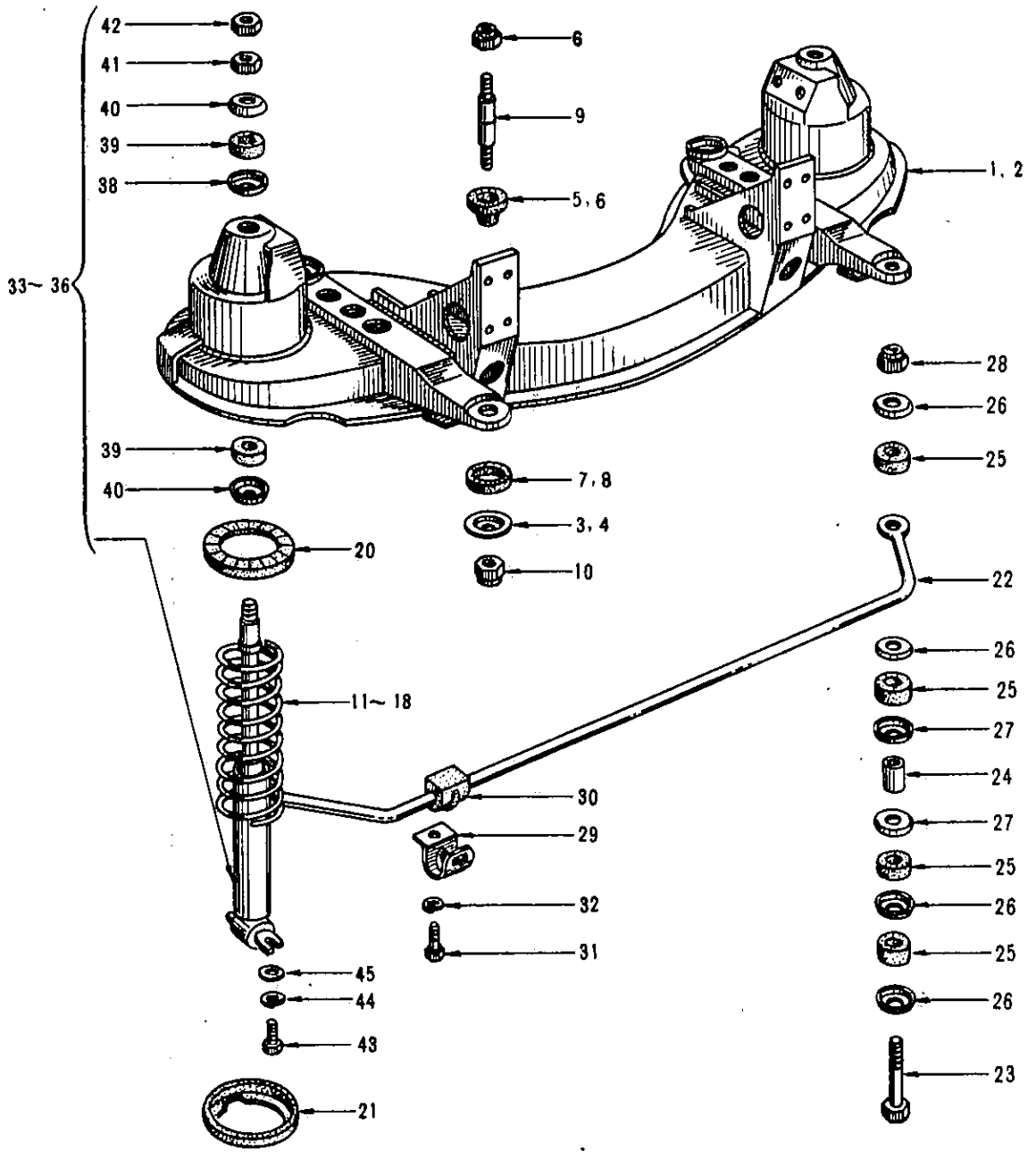

S	KEY NO.	PART NO.	PART NAME	Q'TY	SALES UNIT	MODEL	ICA
			FRONT SUSPENSION				
	1	54401-10600	ASSY-MEMBER,FRONT SUSPENSION	1	1	1.3L 411	
	2	54401-15800	ASSY-MEMBER,FRONT SUSPENSION	1	1	1.6L 411	
	3	54464-10600	WASHER-SPECIAL(FRONT)TO FRONT SUSPENSION MEMBER MOUNTING	2	5	411	
	4	54465-10600	WASHER-SPECIAL(REAR)TO FRONT SUSPENSION MEMBER MOUNTING	2	10	411	
	5	54466-10600	PAD-RUBBER(FRONT)TO FRONT SUSPENSION MEMBER MOUNTING	2	1	411	
	6	54467-10600	PAD-RUBBER(REAR)TO FRONT SUSPENSION MEMBER MOUNTING	2	1	411	
	7	54468-10600	SEAT-RUBBER(FRONT)TO FRONT SUSPENSION MEMBER MOUNTING	2	10	411	
	8	54469-10600	SEAT-RUBBER(REAR)TO FRONT SUSPENSION MEMBER MOUNTING	2	1	411	
	9	54522-10600	BOLT TO FRONT SUSPENSION MEMBER MOUNTING	4	10	411	
*	10	00912-44700	NUT TO FRONT SUSPENSION MEMBER MOUNTING	8	50	411	
	11	54010-10604	SPRING-FRONT(R.H.)	1		1.3L 411 EXC.UTK	
*	12	54010-10603	SPRING-FRONT(L.H.)	1		UTK,1.6l 411	
*	13	54010-10603	SPRING-FRONT(L.H.)	1		1.3L 411(EXC.UTK)	

REVISED: SEPTEMBER,1968

Printed in Japan

S	KEY NO.	PART NO.	PART NAME	Q'TY	SALES UNIT	MODEL	ICA
	14	54010-15801	SPRING-FRONT(L.H.)	1		UTK,1.6L 411	
	15	54010-15800	SPRING-FRONT(R.H.)	1		1.6L 411	
*	16	54010-10603	SPRING-FRONT(FROM C/# RL411-670433)	1		1.6L 411(U.S.A.)	N
	17	54010-15801	SPRING-FRONT(L.H.)	1		1.6L 411	
*	18	54010-10603	SPRING-FRONT(FROM C/# RL411-670433)	1		1.6L 411(U.S.A.)	N
	19	54010-11601	SPRING-FRONT	2		OP.411 HIGH SPEED	
	20	54036-10600	SEAT-UPPER,FRONT SPRING	2		411	
	21	54037-10600	SEAT-LOWER,FRONT SPRING	2		411	
	22	54611-10600	BAR-TENSION,FRONT STABILIZER	1	1	411	
	23	54619-10601	ROD-CONNECTING,FRONT STABILIZER	2	1	411	
	24	54630-10600	SPACER-FRONT STABILIZER	2	10	411	
	25	56112-09400	BUSHING-RUBBER	8		411	
	26	56113-09400	WASHER-SPECIAL,OUTER	8	10	411	
	27	56114-09400	WASHER-SPECIAL,INNER	4	10	411	
	28	00912-34610	NUT	2	50	411	
	29	54614-10600	BRACKET-STABILIZER MOUNTING	2	10	411	
	30	54613-32200	BUSHING-RUBBER,STABILIZER	2	50	411	
	31	00114-51810	BOLT	2		411	
	32	00915-11510	WASHER-LOCK	2		411	
	33	56110-10625	KIT-ABSORBER,SHOCK,FRONT	2		1.3L 411(EXC.UTK)	

Printed in Japan

REVISED: SEPTEMBER,1968

S	KEY NO.	PART NO.	PART NAME	Q'TY	SALES UNIT	MODEL	ICA
	34	56110-15825	KIT-ABSORBER,SHOCK,FRONT(TO C/# RL411-670432)	2		UTK,1.6L 411	
	35	56110-10625	KIT-ABSORBER,SHOCK,FRONT(FROM C/# RL411-670433)	2		UTK,1.6L 411	N
	36	56110-10627	KIT-ABSORBER,SHOCK,FRONT	2		OP.411 HEAVY DUTY	
	37	56140-10600	ASSY-MOUNTING,LOWER,FRONT SHOCK ABSORBER	2		411	
	38	56114-09400	WASHER-SPECIAL,INNER	2	10	411	
	39	56112-09400	BUSHING-RUBBER,SHOCK ABSORBER	4		411	
	40	56113-09400	WASHER-SPECIAL,OUTER	4	10	411	
	41	00911-14610	NUT	2		411	
	42	00911-34610	NUT-LOCK	2	50	411	
	43	00124-52010	BOLT	4		411	
	44	00915-11510	WASHER-LOCK	4		411	
	45	00915-41510	WASHER-PLAIN	4		411	

Printed in Japan

REVISED: SEPTEMBER,1968

NOTE

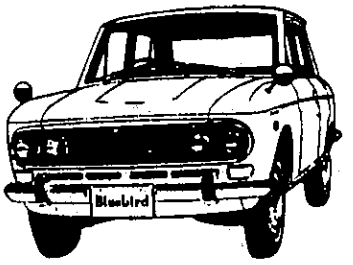

NOTE

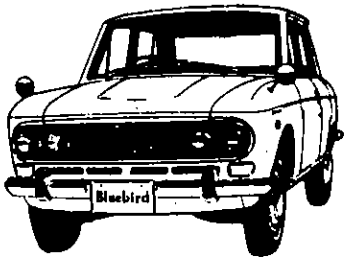

REAR AXLE

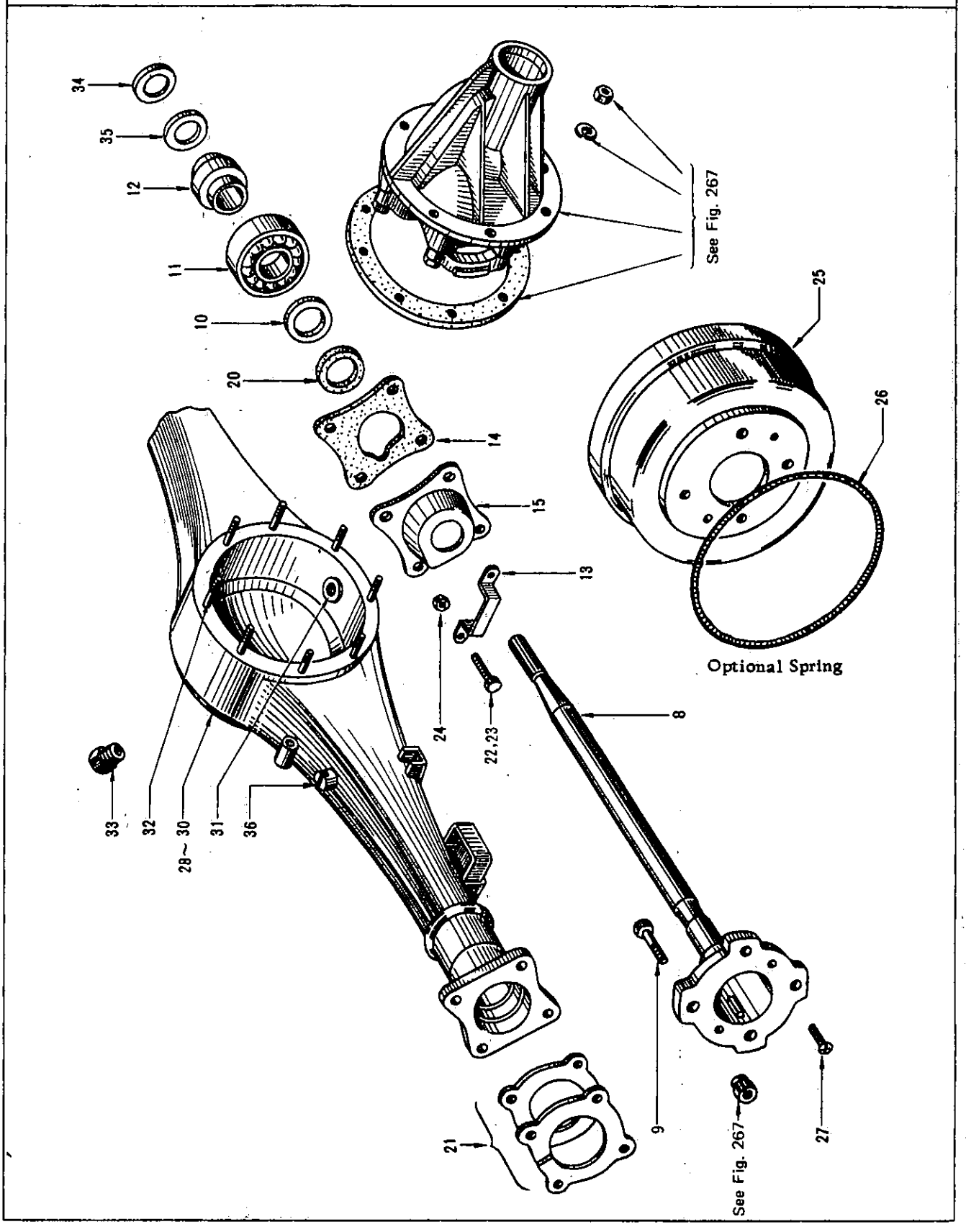
34
35
12
11
10
20
14
15
13
24
22,23
8
33
32
28~30
31
36
21
9
See Fig. 267
27
See Fig. 267
25
26
Optional Spring

S	KEY NO.	PART NO.	PART NAME	Q'TY	SALES UNIT	MODEL	ICA
			REAR AXLE				
	1	43000-16750	ASSY-AXLE,REAR(35T:8T)	1		UTK 411	
	2	43000-15855	ASSY-AXLE,REAR(35T:9T)	1	1	1.6L 411	
	3	43000-16550	ASSY-AXLE,REAR(35T:8T)	1		U,WU 411	
	4	43000-16951	ASSY-AXLE,REAR(35T:8T)	1	1	U,WU 411	Y
	5	43000-16950	ASSY-AXLE,REAR(37T:9T)	1	1	UT,WUT 411	
	6	43000-17050	ASSY-AXLE,REAR(35T:8T)	1	1	LU,WLU 411	
	7	43000-17150	ASSY-AXLE,REAR(37T:9T)	1		LUT,WLUT 411	
	8	38164-10651	SHAFT-REAR AXLE	2	1	411	
	9	40221-04101	BOLT-ROAD WHEEL	8	10	411	
	10	43070-04101	SPACER-REAR AXLE BEARING	2	10	411	
	11	43215-08000	BEARING-REAR AXLE	2	1	411	
	12	43084-10600	COLLAR-BEARING,REAR AXLE	2	10	411	
	13	43036-04100	SHIM-REAR AXLE CASE END	AR	10	411	
	14	43239-04100	PACKING-GREASE CATCHER	2	10	411	
	15	43234-04101	ASSY-CATCHER,GREASE(R.H.)	1	10	411	
*	16	43234-18400	ASSY-CATCHER,GREASE(FROM C/# P411-U-122010,PL411-U(T)-37795,WP311-U-817765,WPL411-U(T)-813770)	2	10	411	C
	17	43235-04101	ASSY-CATCHER,GREASE(L.H.)	1	1	411	
*	18	43234-18400	ASSY-CATCHER,GREASE	2	10	411	C

REVISED: SEPTEMBER,1968

Printed in Japan

S	KEY NO.	PART NO.	PART NAME	Q'TY	SALES UNIT	MODEL	ICA
	19	43234-18401	ASSY-CATCHER,GREASE	2	1	411	Y
	20	43223-04101	SEAL-GREASE,REAR AXLE BEARING	2	20	411	
	21	43233-04100	PLATE-LOCK,BRAKE DISC FIXING BOLT	4	10	411	
	22	43083-04101	BOLT TO FIX BRAKE DISC	8	10	411	
	23	43083-18400	BOLT(FROM C/# P411-U-122010,PL411-U(T)-037795,WP411-U-817765,WPL411-U(T)-813770 TO FIX BRAKE DISC	8	10	411	N
	24	00912-44510	NUT TO FIX BRAKE DISC	8	50	411	
*	25	40206-10500	DRUM-BRAKE	2		411	
	26	40207-10600	SPRING-BRAKE DRUM	2	10	411	
	27	00324-41410	SCREW(TO BRAKE DRUM)	4		411	
	28	43010-10600	COMP.-CASE,REAR AXLE	1		1.3L R DRIVE 411	
	29	43010-15800	COMP.-CASE,REAR AXLE	1	1	1.6L 411	
	30	43010-10800	COMP.-CASE,REAR AXLE	1		1.3L L DRIVE 411	
*	31	43027-04100	ASSY-PLUG,DRAIN	1		411	
	32	43067-30000	STUD-GEAR CARRIER	8	10	411	
*	33	00931-11200	PLUG-TAPER	1	50	411	
	34	43068-04101	SPACER-OIL SEAL,REAR AXLE	2	10	411	
	35	38212-04101	SEAL-OIL,REAR AXLE SHAFT	2	10	411	
	36	38322-55100	ASSY-BREATHER	1	10	411	

Printed in Japan

REVISED: SEPTEMBER,1968

NOTE

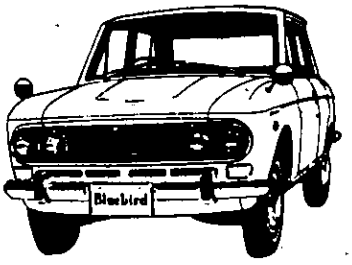

REAR SUSPENSION

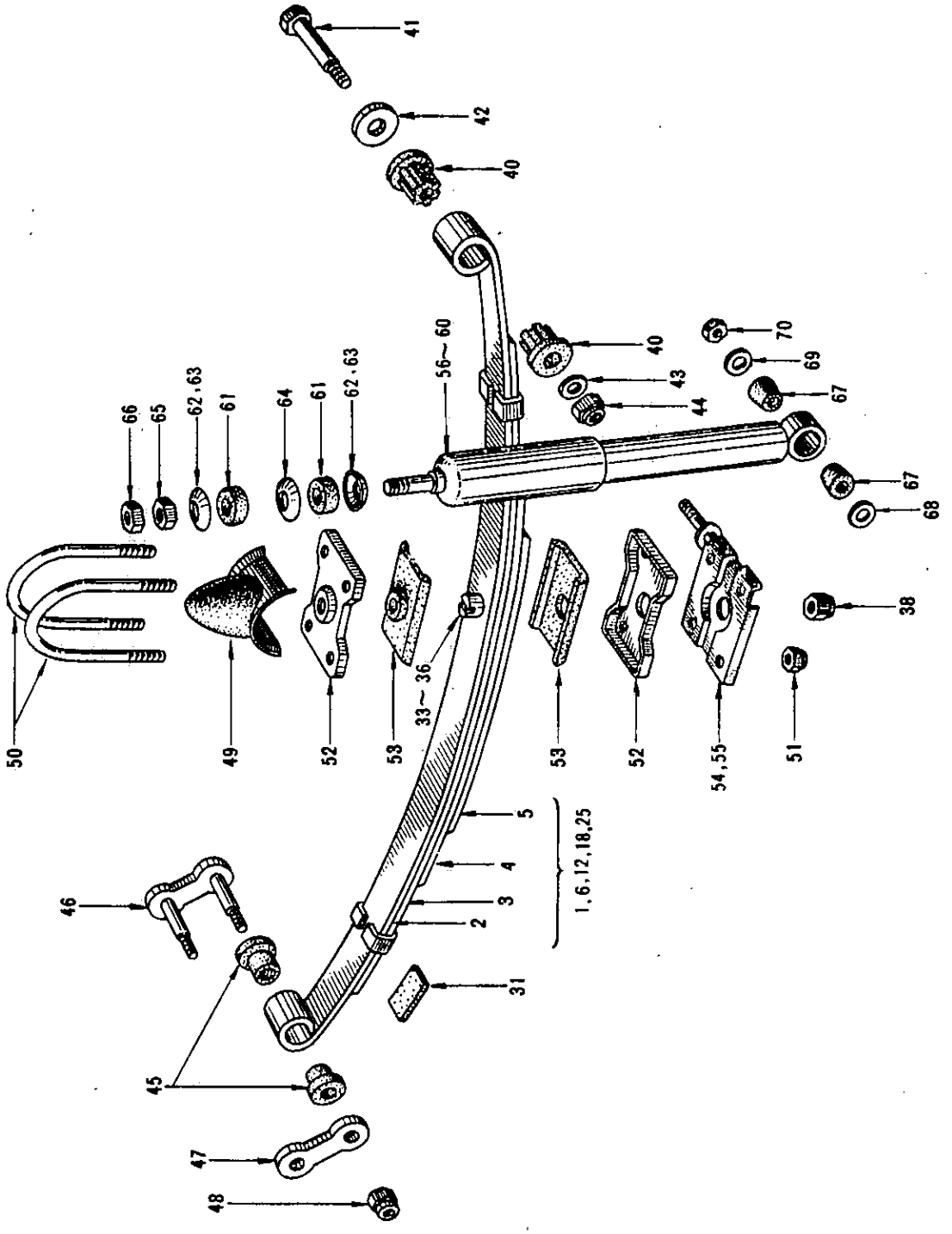

S	KEY NO.	PART NO.	PART NAME	Q'TY	SALES UNIT	MODEL	ICA
			REAR SUSPENSION				
	1	55020-10606	ASSY-SPRING,REAR(4 LEAVES)	2		411 U,LU,UT,LUT	
	2	55021-10606	LEAF-REAR SPRING(NO.1)	2		411 U,LU,UT,LUT	
	3	55022-10606	LEAF-REAR SPRING(NO.2)	2		411 U,LU,UT,LUT	
	4	55023-10606	LEAF-REAR SPRING(NO.3)	2		411 U,LU,UT,LUT	
	5	55024-10606	LEAF-REAR SPRING(NO.4)	2		411 U,LU,UT,LUT	
	6	55020-15800	ASSY-SPRING,REAR(5 LEAVES)	2		411 UTK,	
	7	55021-15800	LEAF-REAR SPRING(NO.1)	2		411 UTK,	
	8	55022-15800	LEAF-REAR SPRING(NO.2)	2		411 UTK,	
	9	55023-15800	LEAF-REAR SPRING(NO.3)	2		411 UTK,	
	10	55024-15800	LEAF-REAR SPRING(NO.4)	2		411 UTK,	
	11	55025-15800	LEAF-REAR SPRING(NO.5)	2		411 UTK,	
	12	55020-11602	ASSY-SPRING,REAR(5 LEAVES)	2		OP.1.3L SEDAN 411	
	13	55021-11602	LEAF-REAR SPRING(NO.1)	2		OP.1.3L SEDAN 411	
	14	55022-11602	LEAF-REAR SPRING(NO.2)	2	1	OP.1.3L SEDAN 411	
	15	55023-11602	LEAF-REAR SPRING(NO.3)	2		OP.1.3L SEDAN 411	
	16	55024-11602	LEAF-REAR SPRING(NO.4)	2		OP.1.3L SEDAN 411	
	17	55025-11602	LEAF-REAR SPRING(NO.5)	2		OP.1.3L SEDAN 411	

Printed in Japan

REVISED: SEPTEMBER,1968

S	KEY NO.	PART NO.	PART NAME	Q'TY	SALES UNIT	MODEL	ICA
	18	55020-10903	ASSY-SPRING,REAR(6 LEAVES)(UP TO MAR.-'66)	2		1.3L WAGON 411	
	19	55021-10903	LEAF-REAR SPRING(NO.1)	2		1.3L WAGON 411	
	20	55022-10903	LEAF-REAR SPRING(NO.2)	2		1.3L WAGON 411	
	21	55023-10903	LEAF-REAR SPRING(NO.3)	2		1.3L WAGON 411	
	22	55024-10903	LEAF-REAR SPRING(NO.4)	2		1.3L WAGON 411	
	23	55025-10903	LEAF-REAR SPRING(NO.5)	2		1.3L WAGON 411	
	24	55026-10903	LEAF-REAR SPRING(NO.6)	2		1.3L WAGON 411	
	25	55020-19600	ASSY-SPRING,REAR(5 LEAVES)(FROM'66-APR.)	2		1.3L WAGON 411	
	26	55021-19600	LEAF-REAR SPRING(NO.1)	2		1.3L WAGON 411	
	27	55022-19600	LEAF-REAR SPRING(NO.2)	2		1.3L WAGON 411	
	28	55023-19600	LEAF-REAR SPRING(NO.3)	2		1.3L WAGON 411	
	29	55024-19600	LEAF-REAR SPRING(NO.4)	2		1.3L WAGON 411	
	30	55025-19600	LEAF-REAR SPRING(NO.5)	2		1.3L WAGON 411	
	31	55041-10605	PAD-REAR SPRING	AR		1.3L 411	
	32	55030-10903	SPACER-REAR SPRING	2		1.3L WAGON 411	
	33	55057-04101	BOLT-CENTER,REAR SPRING	2		1.3L SEDAN 411	
	34	55057-11600	BOLT-CENTER,REAR SPRING(FOR 55020-11602)	2		OP.1.3L SEDAN 411	
	35	55057-15800	BOLT-CENTER,REAR SPRING	2		UTK,411	

Printed in Japan

REVISED: SEPTEMBER,1968

S	KEY NO.	PART NO.	PART NAME	Q'TY	SALES UNIT	MODEL	ICA
	36	55057-10903	BOLT-CENTER,REAR SPRING	2		1.3L WAGON 411	
	37	55056-04100	PIECE-DISTANCE,CENTER BOLT NUT	2		1.3L 411	
	38	00999-20410	NUT	2	100	1.3L 411	
	39	55260-10600	ASSY-SEAT,REAR SPRING	2	1	1.3L 411	
	40	55045-10610	BUSHING-REAR SPRING,FRONT	4	1	1.3L 411	
	41	55215-10601	ASSY-PIN,REAR SPRING,FRONT	2	10	1.3L 411	
	42	55218-10600	CAP-BRACKET,REAR SPRING,FRONT	2	5	1.3L 411	
	43	55219-10602	WASHER-FRONT,REAR SPRING	2	5	1.3L 411	
	44	00912-44910	NUT	2	50	1.3L 411	
	45	55046-10610	BUSHING-REAR,REAR SPRING	8	10	1.3L 411	
	46	55220-10600	ASSY-SHACKLE,REAR SPRING	2	2	1.3L 411	
	47	55221-10600	SHACKLE-REAR SPRING	2	5	1.3L 411	
	48	00912-44710	NUT	4		1.3L 411	
	49	55240-13200	ASSY-BUMPER,REAR AXLE	2	1	1.3L 411	
	50	55247-10600	CLIP-REAR SPRING	4	2	1.3L 411	
	51	00912-34610	NUT	8	50	411	
	52	55054-04101	PLATE-LOCATION,REAR SPRING	4	1	1.3L 411	
	53	55243-04100	PAD-SEAT,REAR SPRING	4	2	411	
	54	55262-16500	ASSY-SEAT,LOWER,REAR SPRING(R.H.)	1	1	1.3L 411	
	55	55266-16500	ASSY-SEAT,LOWER,REAR SPRING(L.H.)	1	1	1.3L 411	

REVISED: SEPTEMBER,1968

Printed in Japan

S	KEY NO.	PART NO.	PART NAME	Q'TY	SALES UNIT	MODEL	ICA
	56	56210-13225	KIT-ABSORBER,SHOCK,REAR	2		1.3L 411 (EXC.UTK)	
	57	56210-13226	KIT-ABSORBER,SHOCK,REAR(FOR HEAVY DUTY)	2		OP,1.3L 411 (EXC. UTK)	
	58	56210-15825	KIT-ABSORBER,SHOCK,REAR(TO C/# RL411-670432)	2		UTK,1.6L 411	
	59	56210-13225	KIT-ABSORBER,SHOCK,REAR(FROM C/# RL411-670433)	2		UTK,1.6L 411	N
	60	56210-19625	KIT-ABSORBER,SHOCK,REAR(FROM APR.-'66)	2		WAGON 411	
	61	56112-09400	BUSHING-RUBBER,SHOCK ABSORBER	4		411	
	62	56113-09400	WASHER,SPECIAL,OUTER	4	10	411	
	63	56113-18800	WASHER-SPECIAL,OUTER	4	1	411	Y
	64	56114-09400	WASHER-SPECIAL,INNER	2	10	411	
	65	00911-14610	NUT	2		411	
	66	00911-34610	NUT	2	50	411	
	67	56119-32201	BUSHING-RUBBER,SHOCK ABSORBER MOUNTING	4		411	
	68	56121-32201	WASHER-FRONT,SHOCK ABSORBER MOUNTING	2	10	411	
	69	56225-10601	WASHER-SPECIAL,SHOCK ABSORBER MOUNTING	2	50	411	
	70	00912-34710	NUT	2	100	411	
	71	55021-11699	LEAF-REAR SPRING NO.1(OFF-SET)	2		OP,411	
	72	55020-24500	ASSY-SPRING,REAR	2		411 RL-UAK ,RL-UTK	
	73	55020-13200	ASSY-SPRING,REAR(FROM C/# RL411-670433)	2		411 RL-UTK	N
	74	55020-24500	ASSY-SPRING,REAR	2		411 RL-UAK RL-UTK	

Printed in Japan

REVISED: SEPTEMBER,1968

S	KEY NO.	PART NO.	PART NAME	Q'TY	SALES UNIT	MODEL	ICA
	75	55020-20200	ASSY-SPRING,REAR(FROM C/# RL411-670433)	2		411 RL-UAK	N
	76	55020-24600	ASSY-SPRING,REAR	2		411 WRL-UTK,WRL-UAK	
	77	55054-24500	PLATE-LOCATION,REAR SPRING	2	1	411 RL-UAK,RL-UTK	
	78	55054-24700	PLATE-LOCATION,REAR SPRING(TO C/# RL411-670432)	2	1	411 WRL-UAK,WRL-UTK	
	79	55054-14600	PLATE-LOCATION,REAR SPRING(FROM C/# RL411-670433)	2	1	411 RL-UTK	
	80	55054-24501	PLATE-LOCATION,REAR SPRING(FROM C/# RL411-670433)	2	10	411 RL-UAK	
	81	55055-24500	SPACER-SEAT,REAR SPRING	2	1	411 RL-UAK,WRL-UAK	
	82	55240-24500	ASSY-BUMPER,REAR AXLE	2	1	1.6L 411	
	83	55240-15800	ASSY-BUMPER,REAR AXLE	2	1	1.6L 411	Y
	84	55243-24500	ASSY-SEAT,REAR SPRING, LOWER	4		411 RL-UAK RL-UTK	
	85	55243-04100	SEAT-PAD(FROM C/# RL411-670433)	4	2	411 RL-UTK	N
	86	55243-24500	ASSY-SEAT,REAR SPRING LOWER	4		411 RL-UAK RL-UTK	
	87	55243-20200	SEAT-PAD(FROM C/# RL411-670433)	4	1	411 RL-UAK	N
	88	55243-24701	PAD-SEAT,REAR SPRING	4	1	411 WRL-UTK,WRL-UAK	
	89	55247-24601	CLIP-REAR SPRING	4	2	411 WRL-UTK,WRL-UAK	
	90	55262-24500	ASSY-SEAT,LOWER,REAR SPRING(R.H.)	1	5	1.6L 411	
	91	55266-24500	ASSY-SEAT,LOWER,REAR SPRING(L.H.)	1	5	1.6L 411	

Printed in Japan

REVISED: SEPTEMBER,1968

NOTE

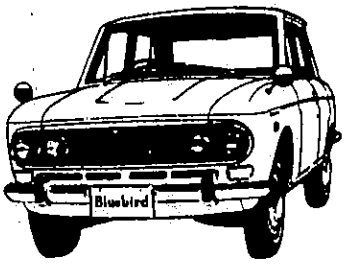

NOTE

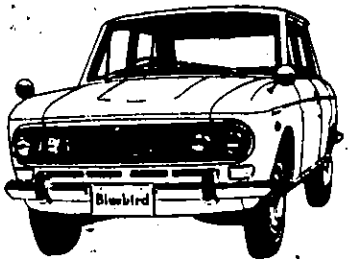

STEERING WHEEL

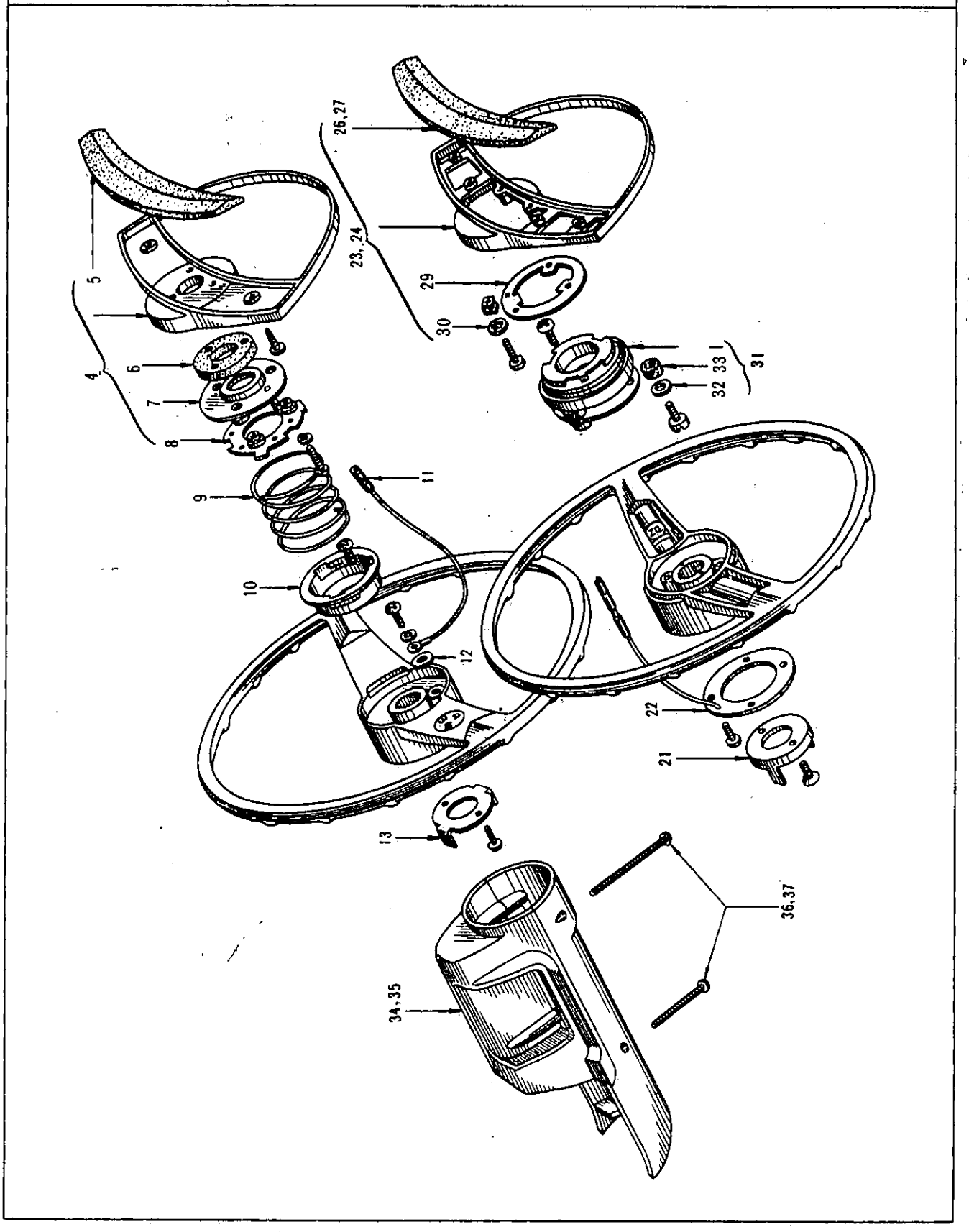

S	KEY NO.	PART NO.	PART NAME	Q'TY	SALES UNIT	MODEL	ICA
			STEERING WHEEL				
*	1	48400-13200	ASSY-WHEEL,STEERING(BLACK)(TO MAR-66)	1		1.3L 411 (EXC.UTK)	
*	2	48400-16500	ASSY-WHEEL,STEERING(BLACK)(FROM APR.-'66)	1	1	1.3L 411 (EXC.UTK)	Y
	3	48400-18500	ASSY-WHEEL,STEERING(BLACK)RUBBER	1	1	1.3L 411	Y
	4	48420-13200	ASSY-RING,HORN(BLACK)	1		1.3L 411(EXC.UTK)	
	5	48422-13205	PAD-HORN RING(BLACK)	1		1.3L 411(EXC.UTK)	
	6	48423-10600	CUSHION-CONTACT PLATE	1		1.3L 411(EXC.UTK)	
	7	48451-13205	PLATE-CONTACT	1	5	1.3L 411(EXC.UTK)	
	8	48425-10600	SEAT-SPRING	1	5	1.3L 411(EXC.UTK)	
	9	48426-10600	SPRING-HORN RING	1	10	1.3L 411(EXC.UTK)	
	10	48427-10600	CUP-SEAT SPRING	1	5	1.3L 411(EXC.UTK)	
	11	48428-10600	CORD-HORN	1	10	1.3L 411(EXC.UTK)	
	12	48466-13205	INSULATOR-HORN CORD	1	50	1.3L 411(EXC.UTK)	
	13	48430-10600	CAN-CELLING CAM	1	10	1.3L 411(EXC.UTK)	
	14	00310-62020	SCREW	3		1.3L 411(EXC.UTK)	
	15	00915-10610	WASHER	3		1.3L 411(EXC.UTK)	

Printed in Japan

REVISED: SEPTEMBER, 1968

S	KEY NO.	PART NO.	PART NAME	Q'TY	SALES UNIT	MODEL	ICA
*	16	48400-13200	ASSY-WHEEL,STEERING(BLACK)(TO MAR-66)	1		1.3L(EXC.UTK)411	
*	17	48400-16500	ASSY-WHEEL,STEERING(BLACK)(FROM APR.-'66)	1	1	1.3L(EXC.UTK)411	Y
	18	48400-18500	ASSY-WHEEL,STEERING(BLACK)RUBBER	1	1	411 (EXC. UTK)	Y
*	19	48400-15800	ASSY-WHEEL,STEERING(BLACK)	1	1	UTK 411	
*	20	48400-19400	ASSY-WHEEL,STEERING(BLACK)	1	1	UTK 411	Y
	21	48430-10610	CAM-CANCELLING	1	5	411	
	22	48429-10610	ASSY-RING,SRIP	1	5	411	
	23	48420-13200	ASSY-RING,HORN(BLACK)(TO MAR-66)	1		1.3L 411 (EXC.UTK)	
	24	48420-16510	ASSY-RING,HORN(BLACK)(FROM APR.-'66)	1	1	1.3L 411 (EXC.UTK)	N
	25	48420-15800	ASSY-BAR,HORN(BLACK)	1	1	UTK 411	
	26	48422-13210	COVER-HORN RING(BLACK)	1	1	411(EXC.UTK)	
	27	48423-15810	COVER-HORN RING	1		UTK 411	
	28	48422-15810	BUTTON-HORN	1	5	UTK 411	
	29	48431-10610	PLATE-CLAMP	1	10	411	
	30	48432-10610	BUSHING-HORN RING(NYLON)	4		411	
	31	48450-10610	ASSY-CONTACT,HORN	1	5	411	
	32	48451-10610	BUSHING-HORN SEAT	3	5	411	
	33	48452-10610	CUSHION-BUSHING	3	10	411	
	34	48327-10651	SET-SHELL,STEERING(BLACK)	1	10	R DRIVE,3 SPEED 411	
	35	48327-10851	SET-SHELL,STEERING(BLACK)	1	1	L DRIVE,3 SPEED 411	

Printed in Japan

REVISED: SEPTEMBER,1968

S	KEY NO.	PART NO.	PART NAME	Q'TY	SALES UNIT	MODEL	ICA
	36	00310-61010	SCREW(TO FIX SHELL)	4	50	3 SPEED 41 1	
	37	00330-61410	SCREW(TO FIX TURN SIGNAL SWITCH TO SHELL)	1	50	3 SPEED 41 1	
	38	48327-12450	SET-SHELL,STEERING(BLACK)	1	1	4 SPEED 41 1	
	39	00310-61610	SCREW TO FIX SHELL	4	50	4 SPEED 41 1	
	40	00915-10610	WASHER-LOCK TO FIX SHELL	4		4 SPEED 41 1	
	41	00330-61010	SCREW(TO FIX TURN SIGNAL SWITCH TO SHELL)	1	50	4 SPEED 41 1	

REVISED: SEPTEMBER,1968

Printed in Japan

NOTE

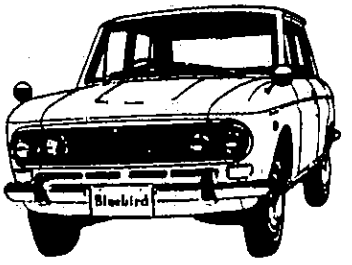

NOTE

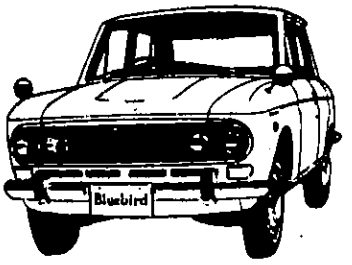

STEERING GEAR

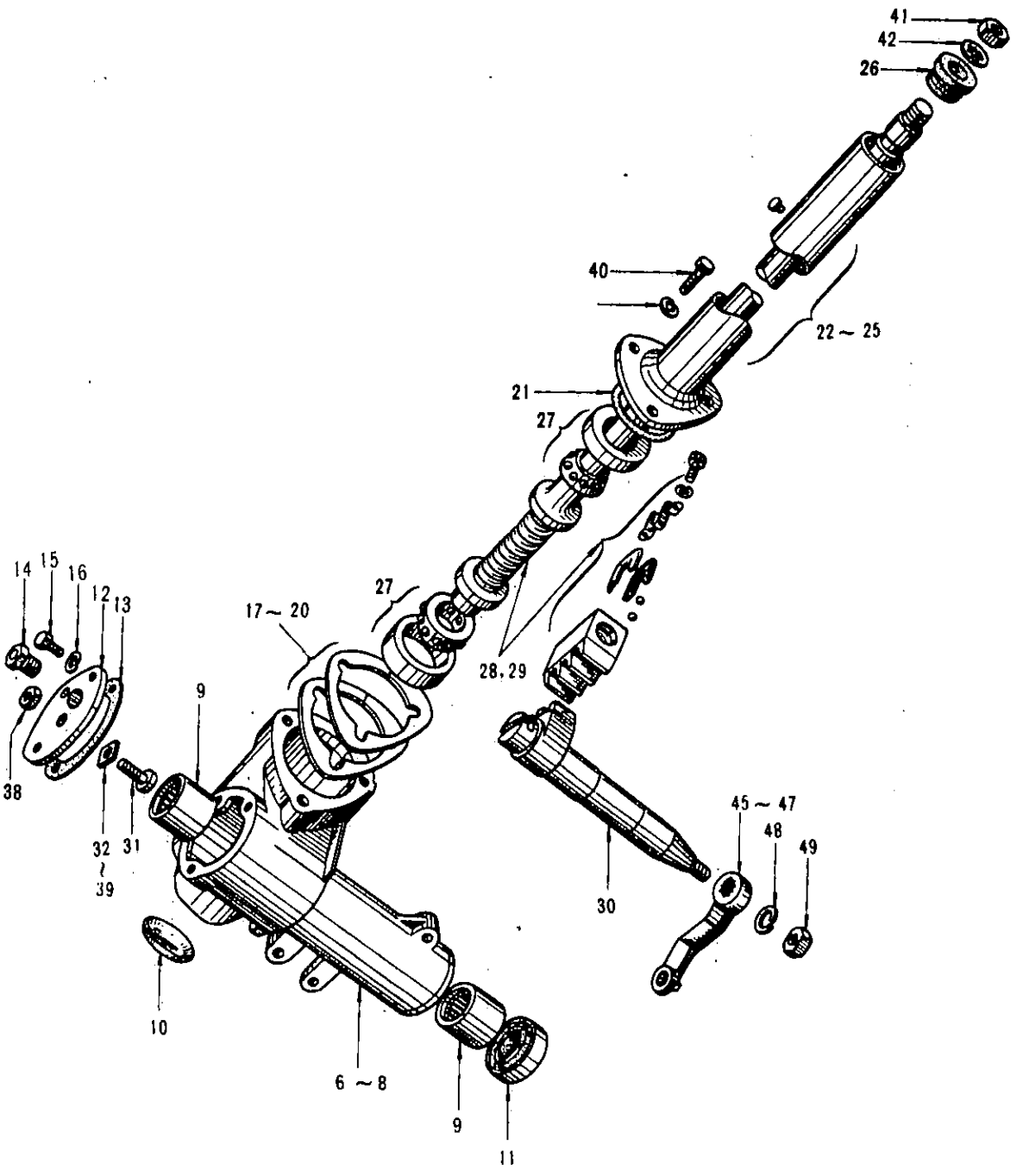

S	KEY NO.	PART NO.	PART NAME	Q'TY	SALES UNIT	MODEL	ICA
			STEERING GEAR				
*	1	48010-16550	ASSY-GEAR,STEERING	1	1	R DRIVE 1.3L 411	
	2	48010-16551	ASSY-GEAR,STEERING	1		R DRIVE 1.3L 411	Y
	3	48010-15851	ASSY-GEAR,STEERING	1	1	R DRIVE 1.6L 411	
*	4	48010-17050	ASSY-GEAR,STEERING	1	1	L DRIVE 1.3L 411	
	5	48010-16051	ASSY-GEAR,STEERING	1		L DRIVE 1.6L 411	
*	6	48011-16500	COMP.-HOUSING,STEERING	1	1	R DRIVE 411	
	7	48011-16501	COMP.-HOUSING,STEERING	1	1	R DRIVE 411	Y
*	8	48011-17000	COMP.-HOUSING,STEERING	1	1	L DRIVE 411	
*	9	48127-16700	COMP.-BEARING,NEEDLE	2	10	411	
	10	00933-33000	PLUG-EXPANSION	1	50	411	
	11	48137-16500	SEAL-OIL,SECTOR SHAFT	1	10	411	
	12	48201-16500	COVER-SECTOR SHAFT	1	1	411	
	13	48204-16500	GASKET-SECTOR SHAFT COVER	1	10	411	
	14	48064-16500	PLUG(POLYETHYLENE)	1	10	411	
	15	00124-51810	BOLT TO FIX SECTOR SHAFT COVER	3		411	
*	16	00915-11500	WASHER-LOCK TO FIX SECTOR SHAFT COVER	3	50	411	
	17	48029-71200	SHIM-ADJUSTING,WORM BEARING(0.762T)	AR	50	411	

Printed in Japan

REVISED: SEPTEMBER,1968

S	KEY NO.	PART NO.	PART NAME	Q'TY	SALES UNIT	MODEL	ICA
	18	48030-71200	SHIM-ADJUSTING,WORM BEARING(0.254T)	AR	10	411	
	19	48031-71200	SHIM-ADJUSTING,WORM BEARING(0.127T)	AR	10	411	
	20	48032-71200	SHIM-ADJUSTING,WORM BEARING(0.05T)	AR	10	411	
	21	48035-71200	"O"RING	1	10	411	
*	22	48050-16500	COMP.-JACKET,STEERING COLUMN(TO MAR-66)	1	1	R DRIVE 411	
	23	48050-16501	COMP.-JACKET,STEERING COLUMN(FROM APR.-'66)	1	1	R DRIVE 411	Y
*	24	48050-17000	COMP.-JACKET,STEERING COLUMN(TO MAR-66)	1	1	L DRIVE 411	
	25	48050-17001	COMP.-JACKET,STEERING COLUMN(FROM APR.-'66)	1	1	L DRIVE 411	Y
	26	48054-32200	ASSY-BEARING,STEERING COLUMN	1	4	411	
	27	48025-16500	BEARING-STEERING WORM	2	1	411	
	28	48024-16500	ASSY-COLUMN,STEERING	1	1	R DRIVE 411	
	29	48024-17000	ASSY-COLUMN,STEERING	1	1	L DRIVE 411	
	30	48103-16500	SHAFT-SECTOR,STEERING GEAR	1	1	411	
	31	48135-32200	SCREW-ADJUSTING,SECTOR SHAFT	1	50	411	
	32	48129-71200	SHIM-ADJUSTING,SECTOR SHAFT(1.600T)	AR	50	411	
	33	48130-71200	SHIM-ADJUSTING,SECTOR SHAFT(1.575T)	AR	10	411	
	34	48131-71200	SHIM-ADJUSTING,SECTOR SHAFT(1.550T)	AR	50	411	
	35	48132-71200	SHIM-ADJUSTING,SECTOR SHAFT(1.525T)	AR	10	411	

Printed in Japan

REVISED: SEPTEMBER,1968

S	KEY NO.	PART NO.	PART NAME	Q'TY	SALES UNIT	MODEL	ICA
	36	48133-71200	SHIM-ADJUSTING,SECTOR SHAFT(0.500T)	AR	10	411	
	37	48134-71200	SHIM-ADJUSTING,SECTOR SHAFT(1.475T)	AR	10	411	
	38	00911-24610	NUT-LOCK,SCREW ADJUSTI NG	1		411	
	39	00124-52010	BOLT TO FIX JACKET TO HOUSING	3		411	
*	40	00915-11500	WASHER-LOCK TO FIX JAC KET TO HOUSING	3	50	411	
	41	48405-30800	NUT TO FIX STEERING WH EEL	1	10	411	
	42	00916-12000	WASHER-LOCK,INTERNAL T OOTH TO FIX STEERING W HEEL	2	50	411	
	43	48418-30800	COLLAR TO FIX STEERING WHEEL	2	5	411	
	44	48419-30800	WIRE TO FIX STEERING W HEEL	1		411	
*	45	48502-16500	ARM-SECTOR SHAFT	1	1	1.3L R DRI VE 411	
*	46	48502-15800	ARM-SECTOR SHAFT	1		1.6L 411	
*	47	48502-17000	ARM-SECTOR SHAFT	1	1	L DRIVE 41 1	
	48	00915-42200	WASHER-LOCK TO FIX SEC TOR SHAFT ARM	1		411	
	49	00911-25210	NUT TO FIX SECTOR SHAF T ARM	1		411	
	50	48215-10600	BOLT TO FIX GEAR HOUSI NG	3	10	411	
	51	00912-64710	TO FIX GEAR HOUSING	3		411	
	52	67810-16500	GROMMET-STEERING	1	1	411	
	53	68643-00800	BUMPER-COMPARTMENT LID	1	50	UTK 411	

Printed in Japan

REVISED: SEPTEMBER,1968

NOTE

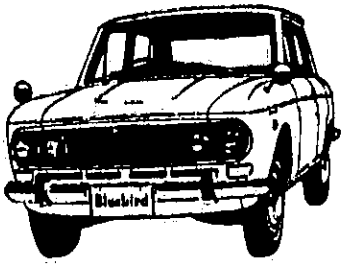

NOTE

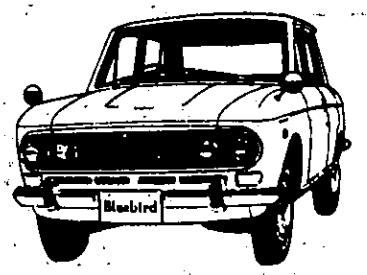

STEERING LINKAGE

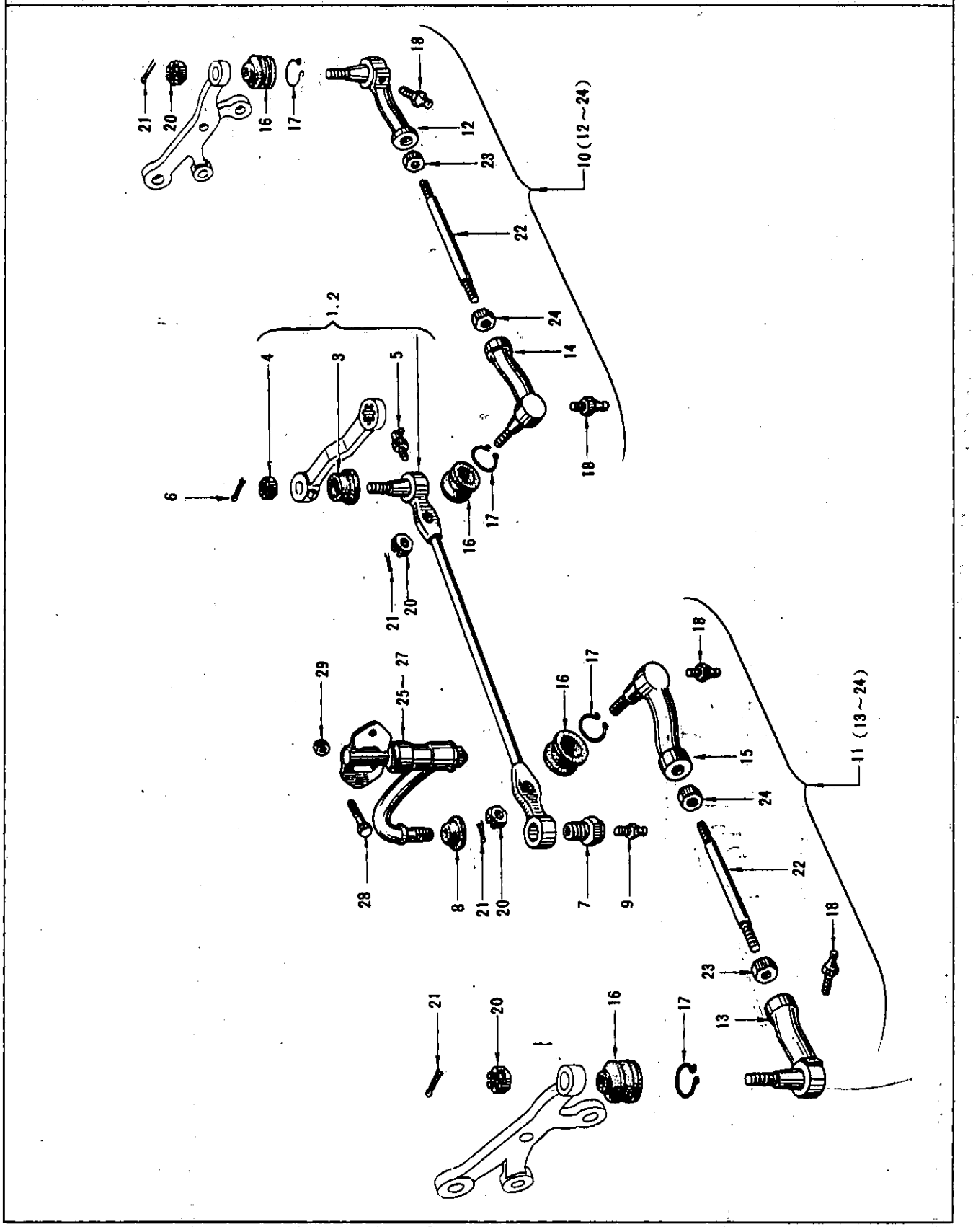

S	KEY NO.	PART NO.	PART NAME	Q'TY	SALES UNIT	MODEL	ICA
			STEERING LINKAGE				
	1	48560-16500	ASSY-ROD,CROSS	1	1	R DRIVE 41 1	
	2	48560-17000	ASSY-ROD,CROSS	1	1	L DRIVE 41 1	
	3	48577-13200	SEAL-DUST,CROSS ROD SOCKET	1	10	411	
	4	00911-04710	TO FIX BALL STUD	1		411	
	5	00932-20200	NIPPLE-GREASE TO FIX BALL STUD	1	100	411	
	6	00921-32210	PIN-COTTER TO FIX BALL STUD	1		411	
	7	48581-13201	COMP.-BUSHING,THREADED	1	10	411	
	8	48587-13200	SEAL-DUST,THREADED BUSH	1	10	411	
	9	00932-10200	NIPPLE-GREASE	1	100	411	
	10	48510-16500	ASSY-ROD,SIDE(R.H.)	1	1	411	
	11	48630-16500	ASSY-ROD,SIDE(L.H.)	1	1	411	
	12	48520-16500	ASSY-SOCKET,SIDE ROD,OUTER(R.H.)	1	1	411	
	13	48640-16500	ASSY-SOCKET,SIDE ROD,OUTER(L.H.)	1	2	411	
	14	48521-16500	ASSY-SOCKET,SIDE ROD,INNER(R.H.)	1	1	411	
	15	48641-16500	ASSY-SOCKET,SIDE ROD,	1	2	411	
	16	48522-16501	COVER-DUST,BALL SOCKET	4	5	411	
	17	40081-04100	CLAMP-DUST COVER	4	50	411	
	18	00932-10200	NIPPLE-GREASE	4	100	411	
	19	40103-13200	CAP-GREASE NIPPLE	4	10	411	

REVISED: SEPTEMBER,1968

Printed in Japan

S	KEY NO.	PART NO.	PART NAME	Q'TY	SALES UNIT	MODEL	ICA
	20	00911-04700	NUT TO FIX BALL JOINT	4		411	
	21	00921-32210	PIN-COTTER TO FIX BALL JOINT	4		411	
	22	48512-10600	BAR-SIDE ROD	2	1	411	
	23	00911-34910	NUT TO LOCK BALL JOINT TO BAR	2	100	411	
	24	48514-61000	NUT TO LOCK BALL JOINT TO BAR	2	10	411	
	25	48530-13201	ASSY-IDLER,WITH ARM	1	1	1.3L R DRIVE 411	
	26	48530-15801	ASSY-IDLER,WITH ARM	1	1	1.6L 411	
	27	48530-13901	ASSY-IDLER,WITH ARM	1	1	L DRIVE 411	
	28	00124-76510	BOLT TO FIX IDLER TO BODY	2	10	411	
*	29	00912-64700	NUT TO FIX IDLER TO BODY	2	50	411	

REVISED: SEPTEMBER,1968

Printed in Japan

NOTE

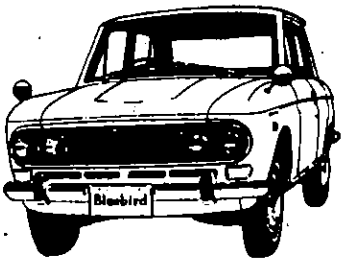

FRONT OUTSIDE VIEW

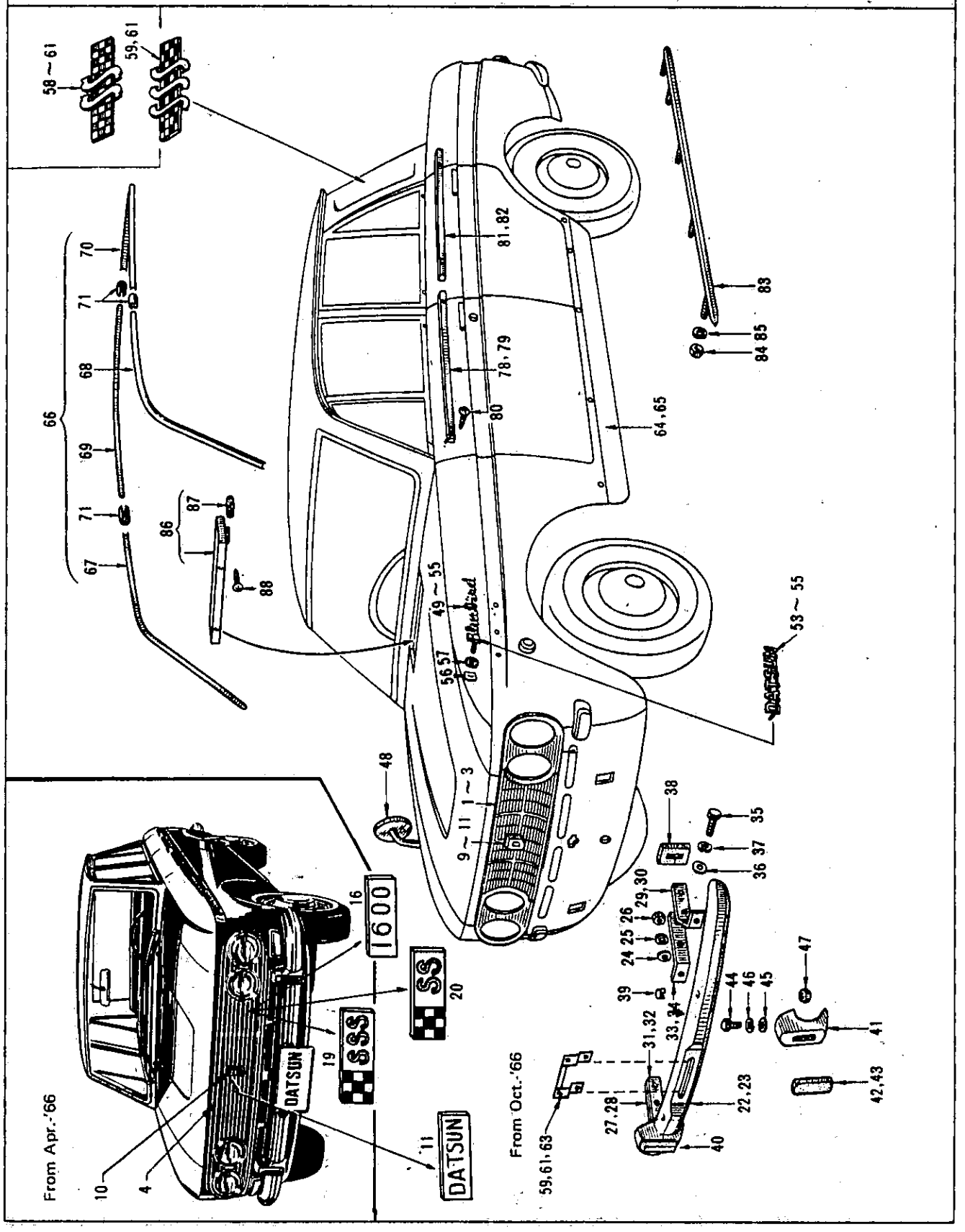

FRONT OUTSIDE VIEW

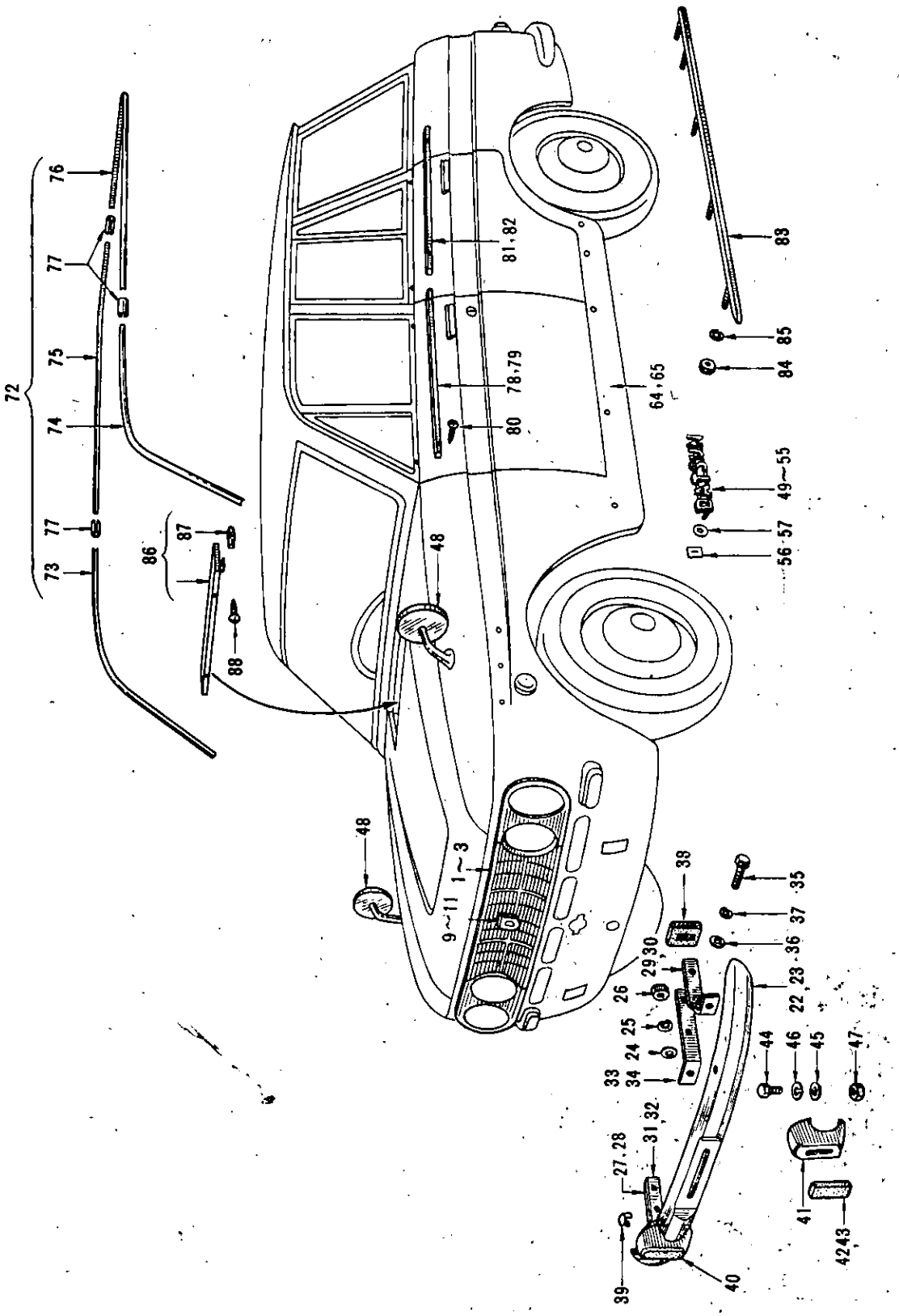

S	KEY NO.	PART NO.	PART NAME	Q'TY	SALES UNIT	MODEL	ICA
			FRONT OUTSIDE VIEW				
	1	62300-13200	ASSY-GRILLE,RADIATOR(TO MAR-66)	1	1	411	
	2	62300-18400	ASSY-GRILLE,RADIATOR (FROM'66-APR,)	1	1	411 EXC UTK	N
	3	62300-13200	ASSY-GRILLE,RADIATOR (TO MAR-66)	1	1	411	
	4	62300-19400	ASSY-GRILLE,RADIATOR (FROM APR-66)	1	1	411 UTK, 1.6L	
	5	00314-41210	SCREW TO FIX BRACKET	4	50	411	
	6	00915-41410	WASHER-PLAIN TO FIX BRACKET	4		411	
	7	00915-11410	WASHER-LOCK TO FIX BRACKET	4		411	
	8	62332-13200	WASHER-VINYL TO FIX BRACKET	4	1	411	
	9	62800-13200	ASSY-EMBLEM,RADIATOR GRILLE(TO MAR-66)	1	2	1.3L 411	
	10	62800-18401	ASSY-EMBLEM,RADIATOR GRILLE(FROM APR.-'66)	1	2	411 (EXC. UTK)	N
	11	62800-19400	ASSY-EMBLEM,RADIATOR GRILLE(FROM APR.-'66)	1	2	UTK,1.6l 411	
	12	00911-10810	NUT TO FIX EMBLEM	2	50	411	
	13	00915-40810	WASHER-PLAIN TO FIX EMBLEM	2		411	
	14	00915-10810	WASHER-LOCK TO FIX EMBLEM	2		411	
	15	00918-10500	NUT-PUSH ON FIX TYPE	2	50	411	Y
	16	00911-10610	NUT	2		411	N
	17	00915-10610	SPRING-LOCK WASHER	2		411	

Printed in Japan

REVISED: SEPTEMBER,1968

S	KEY NO.	PART NO.	PART NAME	Q'TY	SALES UNIT	MODEL	ICA
	18	00915-40610	WASHER-PLAIN	2		411	
	19	62810-19400	BADGE-"SS"(FROM APR.-'66)	1	10	UTK 411	
	20	62810-18900	BADGE-"1600"(FROM SEPT.-'66)	1	1	1.6L 411	
	21	62810-18800	BADGE-"SSS"	1	2	1.6L 411	
	22	62650-13200	ASSY-BUMPER,FRONT	1		R DRIVE 411	
	23	62650-13900	ASSY-BUMPER,FRONT	1		L DRIVE 411	
	24	00915-51610	WASHER-PLAIN TO FIX BUMPER TO STAY	4		411	
	25	00915-11610	WASHER-LOCK TO FIX BUMPER TO STAY	4		411	
	26	00911-14610	NUT TO FIX BUMPER TO STAY	4		411	
*	27	62671-10600	STAY-FRONT BUMPER,OUTER(R.H.)(TO MAR-66)	1	2	411	
	28	62671-16500	STAY-FRONT BUMPER,OUTER(R.H.)(FROM APR.-'66)	1	10	411	Y
*	29	62672-10600	STAY-FRONT BUMPER,OUTER(L.H.)(TO MAR-66)	1	1	411	
	30	62672-16500	STAY-FRONT BUMPER,OUTER(L.H.)(FROM APR.-'66)	1	1	411	Y
*	31	62673-10600	STAY-FRONT BUMPER,INNER(R.H.)(TO MAR-66)	1		411	
	32	62673-16500	STAY-FRONT BUMPER,INNER(R.H.)(FROM APR.-'66)	1	1	411	Y
*	33	62674-10600	STAY-FRONT BUMPER,INNER(L.H.)(TO MAR-66)	1		411	
	34	62674-16500	STAY-FRONT BUMPER,INNER(L.H.)(FROM APR.-'66)	1	10	411	Y
	35	85227-10600	BOLT TO FIX STAY TO SIDE MEMBER	4	10	411	

REVISED: SEPTEMBER,1968

Printed in Japan

S	KEY NO.	PART NO.	PART NAME	Q'TY	SALES UNIT	MODEL	ICA
	36	00915-51910	WASHER-PLAIN TO FIX STAY TO SIDE MEMBER	4		411	
	37	00915-11810	WASHER-LOCK TO FIX STAY TO SIDE MEMBER	4	50	411	
	38	62675-10602	RUBBER-SEALING,FRONT BUMPER STAY	2		411	
	39	62672-36700	PLUG-FOG LAMP HOLE	2	10	A,B TYPE 411	
	40	62665-13600	OVERRIDER-BUMPER,FRONT (R.H.)	1	1	411	
	41	62666-13600	OVERRIDER-BUMPER,FRONT (L.H.)	1		411	
	42	62670-13600	RUBBER-OVERRIDER(TO MAR-66)	2	2	411	
	43	62670-18400	RUBBER-OVERRIDER(FROM APR.-'66)	2	5	411	Y
	44	00114-52010	BOLT TO FIX OVERRIDER	4		411	
	45	00915-41510	WASHER-PLAIN TO FIX OVERRIDER	4		411	
	46	00915-11510	WASHER-LOCK TO FIX OVERRIDER	4		411	
	47	00911-14510	NUT TO FIX OVERRIDER	4		411	
	48	96301-13200	ASSY-BACK MIRROR,OUTSIDE	2	1	411	
	49	63806-10601	EMBLEM-BODY SIDE"BLUEBIRD"(SILVER)(TO MAR-66)	2	2	A,B TYPE 411 (EXC. U.S.A.& AUSTRALIA)	
	50	63806-18400	EMBLEM-BODY SIDE"BLUEBIRD"(SILVER)(FROM APR.-'66)	2	2	A,B TYPE 411 (EXC. U.S.A.& AUSTRALIA)	N
	51	63806-11401	EMBLEM-BODY SIDE"BLUEBIRD"(GOLD)(TO MAR-66)	2	2	C TYPE 411 (EXC,U.S.A.& AUSTRALIA)	

REVISED: SEPTEMBER,1968

Printed in Japan

S	KEY NO.	PART NO.	PART NAME	QTY	SALES UNIT	MODEL	ICA
	52	63806-18500	EMBLEM-BODY SIDE"BLUEBIRD"(GOLD)(FROM APR.-'66)	2	2	C TYPE 411 (EXC.U.S.A.& AUSTRALIA)	N
	53	63806-17200	EMBLEM-BODY SIDE"DATSUN"(SILVER)	2	2	411(U.S.A.& AUSTRALIA)	
	54	63806-10802	EMBLEM-BODY SIDE"DATSUN"(GOLD)	2	2	411(U.S.A.& AUSTRALIA)	
	55	63806-18900	EMBLEM-BODY SIDE"DATSUN"(GOLD)	2	2	411(U.S.A.& AUSTRALIA)	Y
*	56	00918-10500	NUT-SPIRE TO FIX BODY SIDE EMBLEM	6	50	411	
	57	97331-32200	WASHER-VINYL TO FIX BODY SIDE EMBLEM	6	1	411	
	58	76882-12410	MARK-SS(R.H.)	1	1	UTK 411	
	59	76882-15800	MARK-SSS(R.H.)	1	10	1.6L 411	
	60	76883-12410	MARK-SS(L.H.)	1	1	UTK 411	
	61	76883-15800	MARK-SSS(L.H.)	1	10	1.6L 411	
	62	97331-32200	WASHER-VINYL	1	1	UTK 411	
*	63	96230-24000	BRACKET-NUMBER PLATE	1	1	411	
	64	76404-10631	ASSY-SILL,BODY(R.H.)	1		411	
	65	76405-10631	ASSY-SILL,BODY(L.H.)	1		411	
	66	73810-11400	SET-MOULDING,ROOF DRIP	1	1	SEDAN 411	
	67	73811-11400	MOULDING-ROOF DRIP,FRONT(R.H.)	1	1	SEDAN 411	
	68	73812-11400	MOULDING-ROOF DRIP,FRONT(L.H.)	1	1	SEDAN 411	
	69	73813-11400	MOULDING-ROOF DRIP,REAR(R.H.)	1	1	SEDAN 411	
	70	73814-11400	MOULDING-ROOF DRIP,REAR(L.H.)	1	10	SEDAN 411	

Printed in Japan

REVISED: SEPTEMBER,1968

S	KEY NO.	PART NO.	PART NAME	Q'TY	SALES UNIT	MODEL	ICA
	71	73815-11400	CLIP-MOULDING,ROOF DRIP	3	20	SEDAN 411	
	72	73810-10900	SET-MOULDING,ROOF DRIP	1	1	WAGON 411	
	73	73811-11400	MOULDING-ROOF DRIP(R.H.)	1		WAGON 411	
	74	73812-11400	MOULDING-ROOF DRIP(L.H.)	1	1	WAGON 411	
	75	73813-10900	MOULDING-ROOF DRIP,REAR(R.H.)	1	1	WAGON 411	
	76	73814-10900	MOULDING-ROOF DRIP,REAR(L.H.)	1	1	WAGON 411	
	77	73815-11400	CLIP-MOULDING,ROOF DRIP	3	20	WAGON 411	
	78	80970-10600	MOULDING-FRONT DOOR OUTSIDE(R.H.)	1	1	411	
	79	80971-10600	MOULDING-FRONT DOOR OUTSIDE(L.H.)	1	1	411	
	80	80972-10600	SCREW(TO FIX DOOR MOULDING)	8		411	
	81	82970-10600	MOULDING-REAR DOOR,OUTSIDE(R.H.)	1	2	411	
	82	82971-10600	MOULDING-REAR DOOR,OUTSIDE(L.H.)	1	1	411	
	83	76482-10651	SET-MOULDING,BODY SILL	2	1	411	
	84	00911-14410	NUT TO FIX BODY SILL MOULDING	4		411	
	85	00915-11410	WASHER-LOCK TO FIX BODY SILL MOULDING	4		411	
	86	66330-10650	ASSY-GRILLE,COWL TOP	1	1	411	
	87	66312-10600	CAP-COWL GRILLE CLIP	2	10	411	
	88	00511-01010	SCREW	2	50	411	

Printed in Japan

REVISED: SEPTEMBER,1968

NOTE

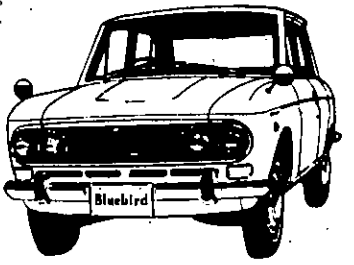

FRONT FENDER & HOOD

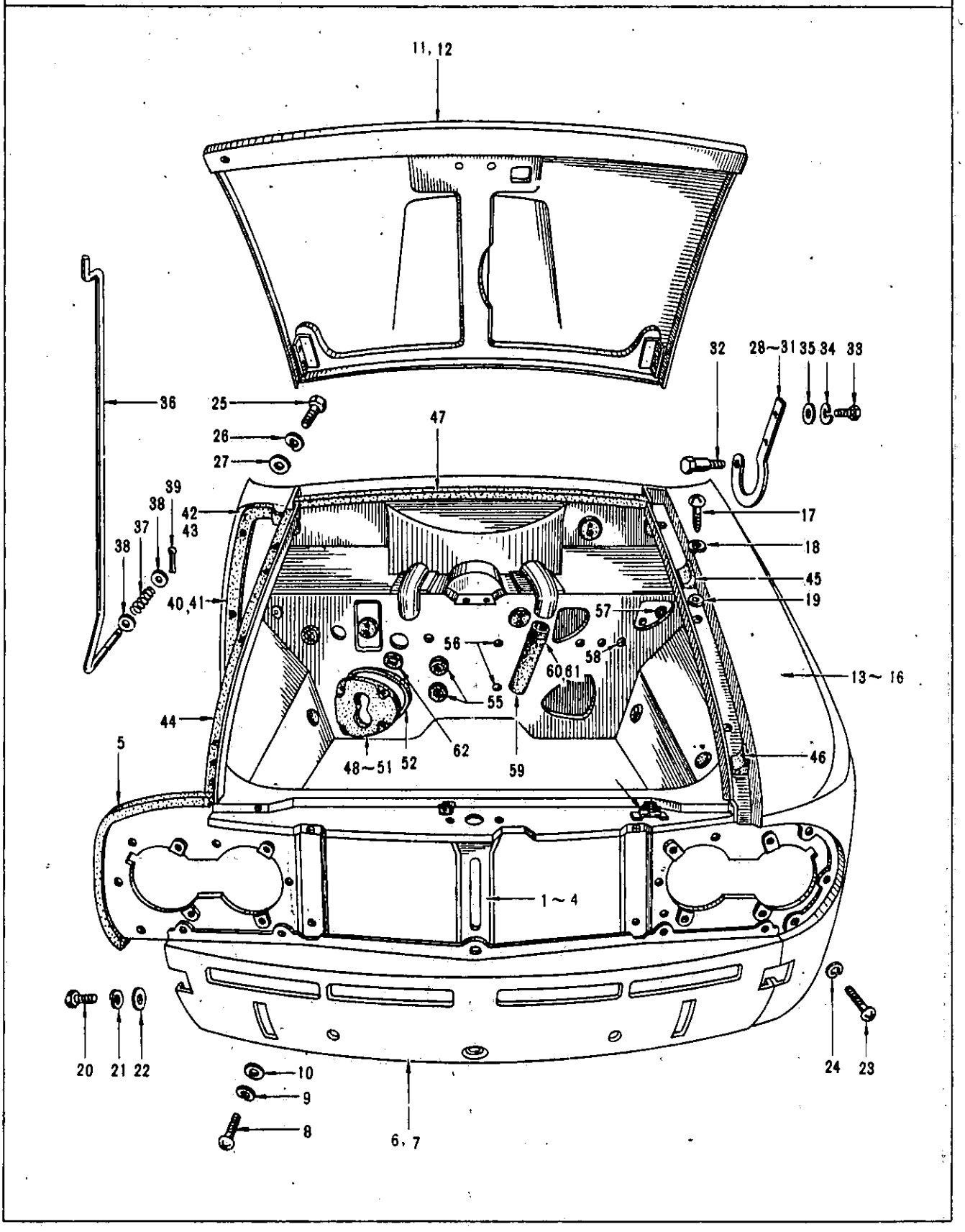

S	KEY NO.	PART NO.	PART NAME	QTY	SALES UNIT	MODEL	ICA
			FRONT FENDER & HOOD				
	1	62500-16530	ASSY-PANEL,FRONT	1	1	R DRIVE 411 (EXC. 1.6L)	
	2	62500-15830	ASSY-PANEL,FRONT	1	1	1.6L R DRIVE 411	
	3	62500-17030	ASSY-PANEL,FRONT	1	1	L DRIVE 411 EXC. 1.6L	
	4	62500-16030	ASSY-PANEL,FRONT	1	1	1.6L L DRIVE 411	
*	5	62811-10600	RUBBER-SEALING,FRONT PANEL	1	2	411	
*	6	62602-13231	ASSY-PANEL,FRONT APRON	1		R DRIVE 411	
	7	62602-13931	ASSY-PANEL,FRONT APRON	1		L DRIVE 411	
	8	00114-41610	BOLT TO FIX FRONT APRON TO FRONT MAIN PANEL	7	50	411	
	9	00915-11410	WASHER-LOCK TO FIX FRONT APRON TO FRONT MAIN PANEL	7		411	
	10	00915-41410	WASHER-PLAIN TO FIX FRONT APRON TO FRONT MAIN PANEL	7		411	
*	11	65100-10630	ASSY-PANEL,HOOD	1	1	411	
	12	65100-16530	ASSY-PANEL,HOOD(FROM OCT.-'65)	1		411	N
	13	63100-11632	ASSY-FENDER,FRONT(R.H.)	1		R DRIVE 411	
	14	63100-10832	ASSY-FENDER,FRONT(R.H.)	1		L DRIVE 411	

Printed in Japan

REVISED: SEPTEMBER,1968

S	KEY NO.	PART NO.	PART NAME	Q'TY	SALES UNIT	MODEL	ICA
	15	63101-11634	ASSY-FENDER,FRONT(L.H.)	1		R DRIVE 41 1	
	16	63101-10834	ASSY-FENDER,FRONT(L.H.)	1		L DRIVE 41 1	
	17	00344-51610	SCREW TO FIX FENDER TO HOOD LEDGE	6		411	
	18	00915-11510	WASHER-LOCK TO FIX FENDER TO HOOD LEDGE	6		411	
	19	00915-41510	WASHER-PLAIN TO FIX FENDER TO HOOD LEDGE	6		411	
	20	00114-51610	BOLT TO FIX FENDER TO FRONT APRON	4		411	
	21	00915-11510	WASHER-LOCK TO FIX FENDER TO FRONT APRON	4		411	
	22	00915-41510	WASHER-PLAIN TO FIX FENDER TO FRONT APRON	4		411	
	23	00314-41610	BOLT TO FIX FENDER TO FRONT PANEL	8	50	411	
	24	00915-11410	WASHER-LOCK TO FIX FENDER TO FRONT PANEL	8		411	
	25	00114-52010	BOLT TO FIX FENDER TO FRONT PILLAR	8		411	
	26	00915-11510	WASHER-LOCK TO FIX FENDER TO FRONT PILLAR	8		411	
	27	00915-41510	WASHER-PLAIN TO FIX FENDER TO FRONT PILLAR	8		411	
	28	65405-10600	HINGE-HOOD(R.H.)	1	10	411	
	29	65405-16500	HINGE-HOOD(R.H.)	1		411	N
	30	65406-10600	HINGE-HOOD(L.H.)	1	10	411	
	31	65406-16500	HINGE-HOOD(L.H.)	1	50	411	N
	32	65409-10600	PIN-HOOD HINGE	2	10	411	
	33	00114-41610	BOLT TO FIX HOOD HINGE	4	50	411	

REVISED: SEPTEMBER,1968

Printed in Japan

S	KEY NO.	PART NO.	PART NAME	Q'TY	SALES UNIT	MODEL	ICA
	34	00915-11410	WASHER-LOCK TO FIX HOOD HINGE	4		411	
	35	00915-41410	WASHER-PLAIN TO FIX HOOD HINGE	4		411	
	36	65710-10601	ROD-HOOD SUPPORT	1	1	411	
	37	65715-10601	SPRING-HOOD SUPPORT	1	10	411	
	38	65716-10600	WASHER-SPECIAL	2		411	
	39	00921-01510	PIN-COTTER	1	50	411	
	40	63145-10601	RUBBER-FRONT FENDER,REAR(TO MAR-66)	2	10	411	
	41	63145-18400	RUBBER-FRONT FENDER,REAR(FROM APR.-'66)	2		411	Y
	42	63146-10601	RUBBER-FRONT FENDER,UPPER(R.H.)	1	1	411	
	43	63147-10601	RUBBER-FRONT FENDER,UPPER(L.H.)	1	5	411	
	44	63148-10600	RUBBER-FRONT FENDER,SIDE	2		411	
	45	65157-10600	BUMPER-HOOD	2		411	
	46	65158-10600	BUMPER-HOOD SIDE	2	10	411	
	47	67853-10600	RUBBER-SEALING,HOOD REAR	1	1	411	
	48	67810-16500	ASSY-GROMMET,STEERING COLUMN	1	1	R DRIVE 411	
	49	67810-24000	ASSY-GROMMET,STEERING COLUMN	1	1	R DRIVE 411	Y
	50	67810-17000	ASSY-GROMMET,STEERING COLUMN	1	1	L DRIVE 411	
	51	67810-18701	ASSY-GROMMET,STEERING COLUMN	1	1	L DRIVE 411	Y
	52	67813-12400	PLUG-GROMMET,STEERING POST	1	5	4 SPEED 411	
	53	00114-41210	BOLT TO FIX GROMMET	4		411	

REVISED: SEPTEMBER,1968

Printed in Japan

S	KEY NO.	PART NO.	PART NAME	Q'TY	SALES UNIT	MODEL	ICA
	54	00915-41410	WASHER-PLAIN TO FIX GROMMET	4		411	
	55	67831-32200	PLUG-WATER PIPE HOLE,ROOM HEATER	2		411	
	56	66174-01500	PLUG-RUBBER(7 D)	7		411	
	57	67875-10600	PLUG-RUBBER(15 D)	1	1	411	
	58	67874-10600	PLUG-RUBBER,SERVOMOTOR HOLE(9 D)	1	10	411	
	59	27167-10602	HOSE-DRAIN,AIR BOX(NR 610,3.0T)	2	5	411	
	60	21504-30050	CLAMP-HOSE	2		3 SPEED 411	
	61	67815-12401	CLAMP-DRAIN,HOSE	1	5	4 SPEED UTK,1.6L 411	
	62	27363-04100	GROMMET-WATER PIPE,ROOM HEATER	2	10	411	

Printed in Japan

REVISED: SEPTEMBER,1968

NOTE

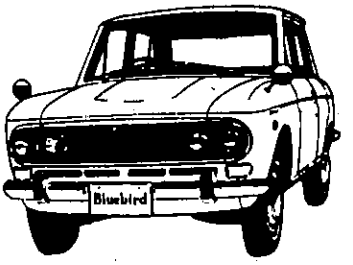

HOOD LOCK CONTROL

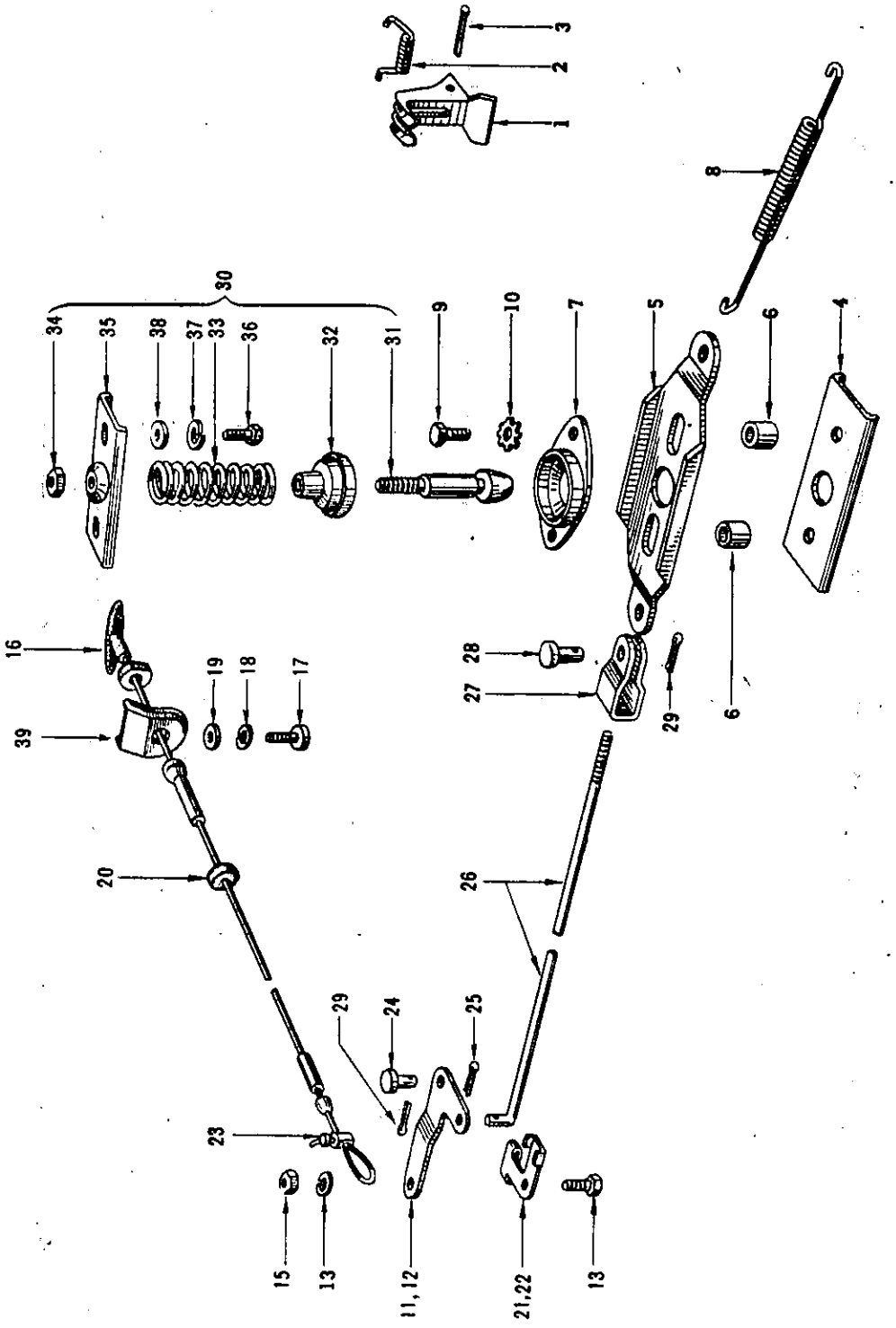

S	KEY NO.	PART NO.	PART NAME	Q'TY	SALES UNIT	MODEL	ICA
			HOOD LOCK CONTROL				
	1	65642-10600	HOOK-SAFETY CATCH	1	1	411	
	2	65644-16500	SPRING-SAFETY CATCH HOOK	1	5	411	
	3	00921-43510	PIN-COTTER	1	50	411	
	4	65618-04100	ASSY-BODY,HOOD LOCK	1	5	411	
	5	65621-04100	LEVER-HOOD LOCK	1		411	
	6	65628-26260	COLLAR-LEVER	2	100	411	
	7	65630-01300	PLATE-GUIDE,DOVETAIL BOLT	1	1	411	
	8	65622-10600	SPRING-HOOD L/CK LEVER	1	5	411	
	9	00114-42510	BOLT	2	50	411	
	10	00916-31410	WASHER	2	50	411	
	11	65658-10601	BELL CRANK-HOOD LOCK	1	1	R DRIVE 411	
	12	65658-10800	BELL CRANK-HOOD LOCK	1	10	L DRIVE 411	
	13	00114-51610	BOLT	1		411	
	14	00915-11510	WASHER-LOCK	1		411	
	15	00911-14510	NUT	1		411	
	16	65640-13200	ASSY-CABLE,HOOD LOCK CONTROL	1	5	411	
	17	00314-41410	SCREW	2	50	411	
	18	00915-11410	WASHER-LOCK	2		411	
	19	00915-41410	WASHER-PLAIN	2		411	
	20	24050-27160	INSULATOR-RUBBER	1		411	

Printed in Japan

REVISED: SEPTEMBER,1968

S	KEY NO.	PART NO.	PART NAME	Q'TY	SALES UNIT	MODEL	ICA
	21	65666-10600	CLIP-HOOD LOCK CONTROL CABLE	1	5	R DRIVE 41 1	
	22	65666-10800	CLIP-HOOD LOCK CONTROL CABLE	1	1	L DRIVE 41 1	
	23	65663-30001	COMP.-CLAMP,CABLE	1	10	411	
	24	65659-04100	RIVET-BELL CRANK	1	5	411	
	25	00921-11210	PIN-COTTER	1		411	
	26	65660-10600	ROD-HOOD LOCK TO BELL CRANK	1	5	411	
	27	65662-04100	CLAMP-HOOD LOCK LEVER	1	100	411	
	28	65663-04100	PIN-HOOD LOCK LEVER	1	10	411	
	29	00921-11210	PIN-COTTER	2		411	
	30	65601-10600	ASSY-LOCK,HOOD MALE	1	2	411	
	31	65604-04101	BOLT-DOVETAIL,HOOD LOCK	1		411	
	32	65605-01300	RETAINER-LIFT SPRING	1		411	
	33	65608-26260	SPRING-LIFT,HOOD LOCK	1	5	411	
	34	00911-14610	NUT	1		411	
	35	65609-10600	ASSY-SEAT,DOVETAIL BOLT	1	5	411	
	36	00114-41610	BOLT TO FIX DOVETAIL BOLT SEAT	2	50	411	
	37	00915-11410	WASHER-LOCK TO FIX DOVETAIL BOLT SEAT	2		411	
	38	00915-41410	WASHER-PLAIN TO FIX DOVETAIL BOLT SEAT	2		411	
	39	65661-10601	BRACKET-HOOD LOCK CONTROL	1	1	411	

Printed in Japan

REVISED: SEPTEMBER,1968

NOTE

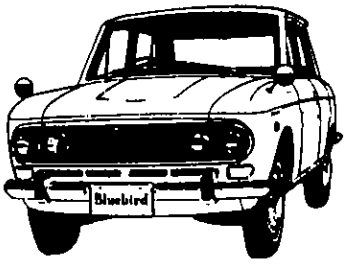

WINDSHIELD GLASS

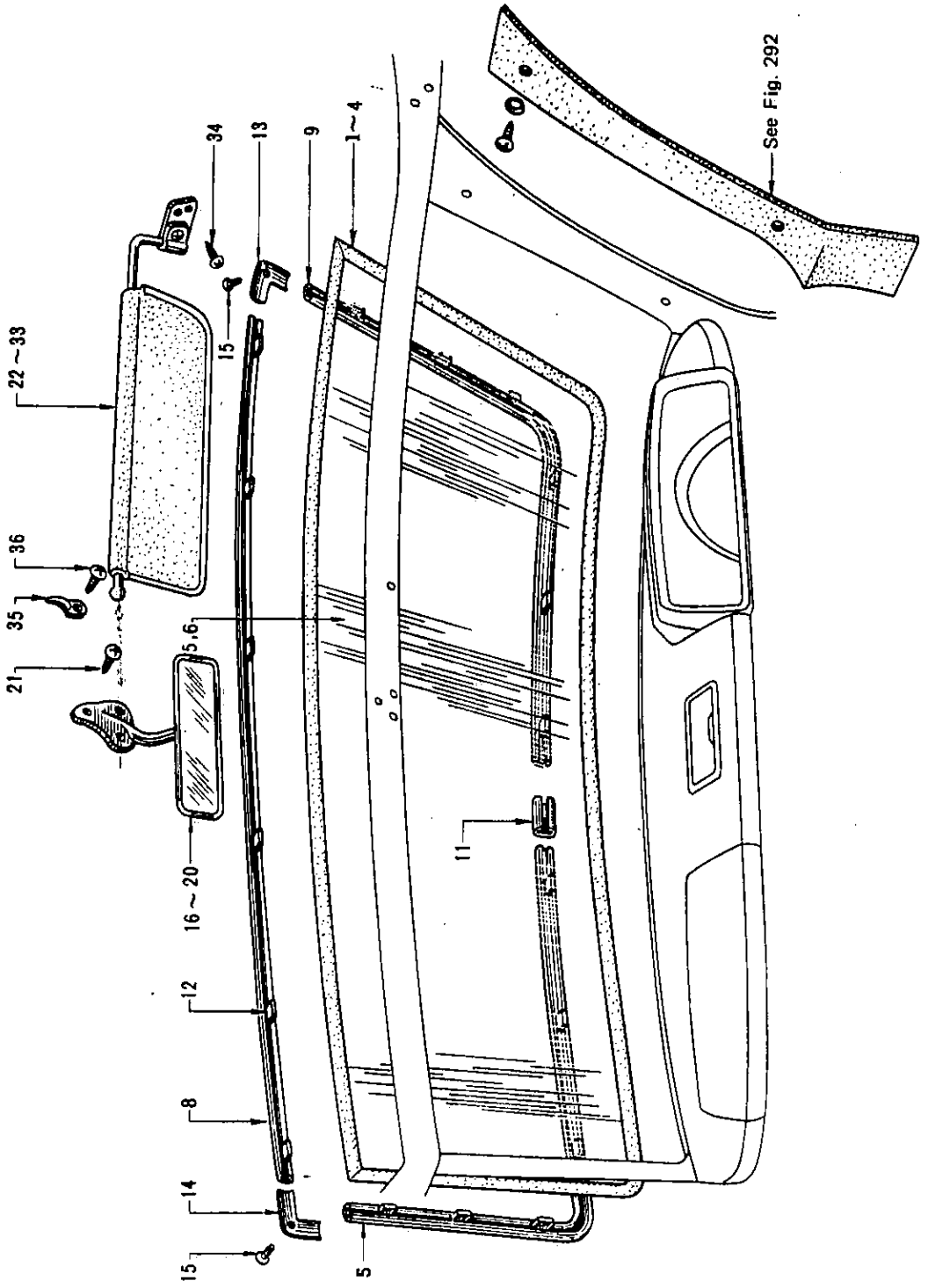

S	KEY NO.	PART NO.	PART NAME	Q'TY	SALES UNIT	MODEL	ICA
			WINDSHIELD GLASS				
	1	72610-13600	WEATHERSTRIP-WINDSHIELD FOR MOULDING	1	1	411 EXC.A TYPE	
	2	72610-13600	WEATHERSTRIP-WINDSHIED FOR MOULDING	1	1	SEDAN 411 EXC.A TYPE	C
	3	72610-19600	WEATHERSTRIP-WINDSHIELD FOR MOULDING	1	1	WAGON 411 EXC.A TYPE	C
	4	72610-10600	WEATHERSTRIP-WINDSHIELD	1	1	A TYPE 411	
	5	72613-10800	GLASS-WINDSHIELD(LAMINATED)	1		A & B TYPE 411	
	6	72613-10801	GLASS-WINDSHIELD(LAMINATED,ANTI-SUN)	1		C TYPE 411	
	7	72810-13600	SET-MOULDING,WINDSHIELD	1		411	
	8	72811-13600	MOULDING-WINDSHIELD(TOP)	1	1	411	
	9	72812-13600	MOULDING-WINDSHIELD,SIDE(R.H.)	1	1	411	
	10	72813-13600	MOULDING-WINDSHIELD,SIDE(L.H.)	1	1	411	
	11	72814-13600	CLIP-MOULDING,WINDSHIELD	6	10	411	
	12	72819-11401	CLIP-MOULDING,INSIDE	17	1	411	
	13	72815-13600	CORNER-MOULDING(R.H.)	1		411	
	14	72816-13600	CORNER-MOULDING(L.H.)	1		411	
	15	00533-62620	SCREW	2		411	
	16	96321-16500	ASSY-MIRROR,BACK,INSIDE	1		SEDAN 411	
	17	96321-16600	ASSY-MIRROR,BACK,INSIDE	1		OP.SEDAN 411	

Printed in Japan

REVISED: SEPTEMBER,1968

S	KEY NO.	PART NO.	PART NAME	Q'TY	SALES UNIT	MODEL	ICA
	18	96321-17400	ASSY-MIRROR,BACK,INSIDE	1		WAGON 411	
*	19	96321-19600	ASSY-MIRROR,BACK,INSIDE	1		WAGON 411	Y
	20	96321-17401	ASSY-MIRROR,BACK,INSIDE	1		OP.WAGON 411	
*	21	00334-01220	SCREW	3	50	411	
	22	96400-10600	ASSY-SUN VISOR(R.H.)(TO SEP-65)	1		A.B TYPE 411	
*	23	96400-16500	ASSY-SUN VISOR(R.H.)(FROM OCT-65 TO SEP-66)	1	1	A.B TYPE 411	Y
	24	96400-24100	ASSY-SUN VISOR(RH)(FROM OCT-66)	1	1	411	Y
*	25	96400-11400	ASSY-SUN VISOR(R.H.)(TO SEP-65)	1	1	C TYPE 411	
	26	96400-16600	ASSY-SUN VISOR(R.H.)(FROM OCT-65 TO SEP-66)	1	1	C TYPE 411	Y
	27	96400-24100	ASSY-SUN VISOR(R.H.)(OCT.-'66)	1	1	411	Y
	28	96400-10800	ASSY-SUN VISOR(L.H.)(TO SEP-65)	1	1	A.B TYPE 411	
*	29	96400-17000	ASSY-SUN VISOR(L.H.)(FROM OCT-65 TO SEP-66)	1	1	A.B TYPE 411	Y
	30	96401-24100	ASSY-SUN VISOR(LH)(FROM OCT-66)	1	1	411	Y
*	31	96401-11400	ASSY-SUN VISOR(L.H.)(TO SEP-65)	1		C TYPE 411	
	32	96401-16600	ASSY-SUN VISOR(L.H.)(FROM OCT-65 TO SEP-66)	1	1	C TYPE 411	Y
	33	96401-24100	ASSY-SUN VISOR(L.H.)(FROM OCT.-'66)	1	1	411	Y
	34	00434-01620	SCREW	AR	50	411	
	35	96409-10601	HOLDER-SUN VISOR	1	1	411	
	36	00531-01610	SCREW	AR		411	

Printed in Japan

REVISED: SEPTEMBER,1968

NOTE

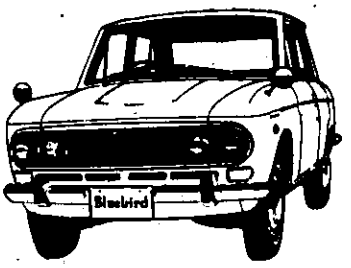

INSTRUMENT PANEL & FITTING

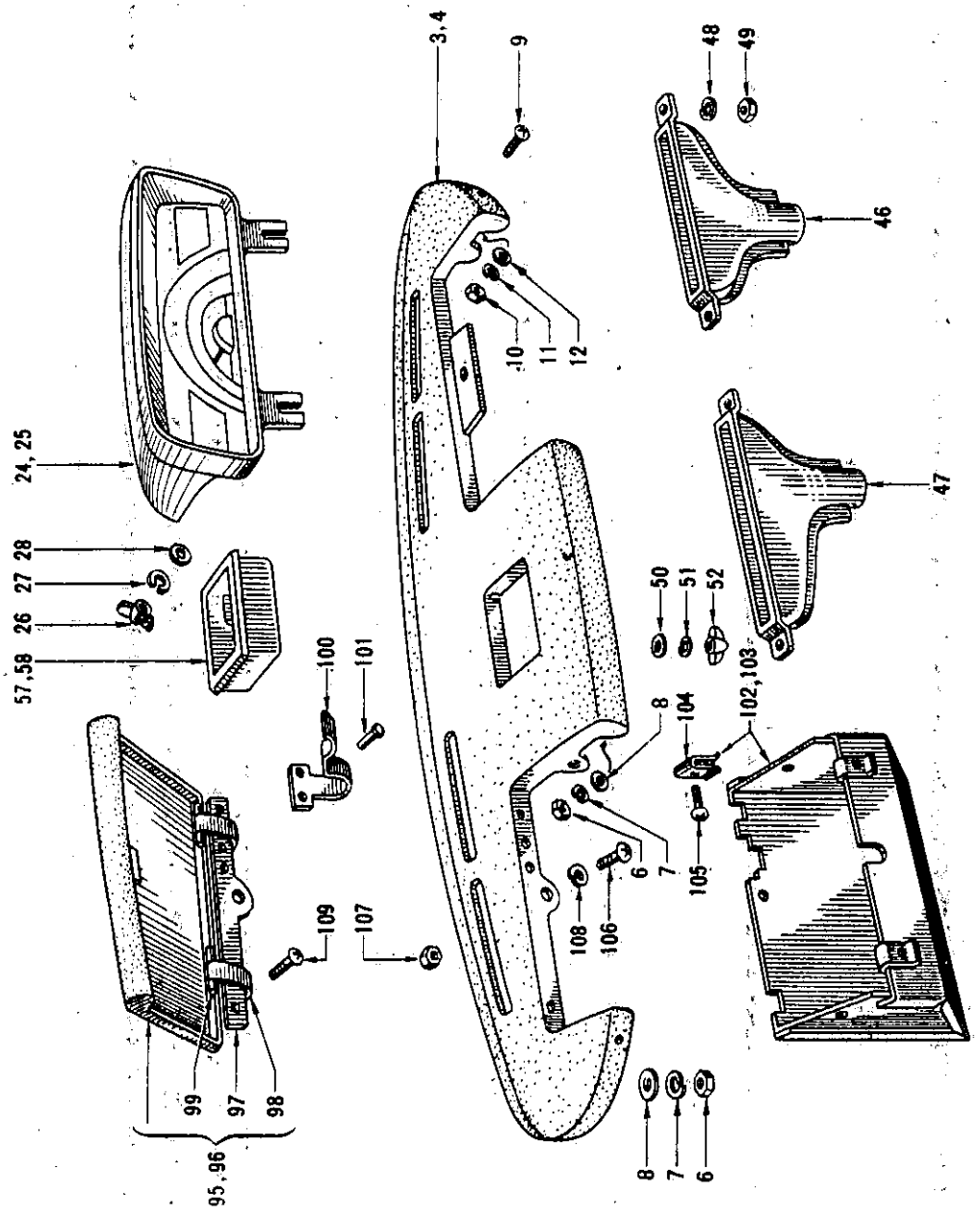

INSTRUMENT PANEL & FITTING

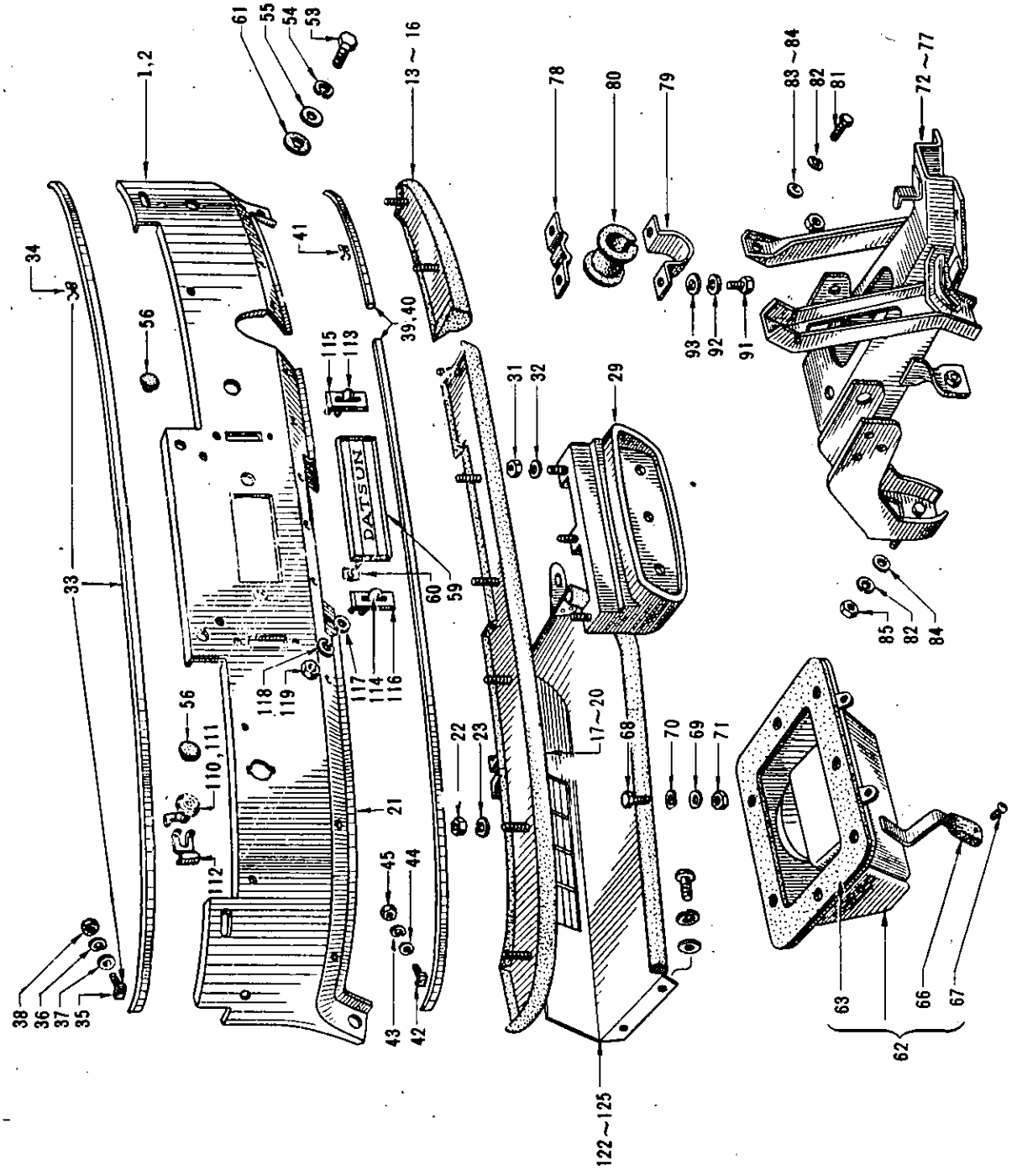

S	KEY NO.	PART NO.	PART NAME	Q'TY	SALES UNIT	MODEL	ICA
			INSTRUMENT PANEL & FITTING				
	1	68100-13230	ASSY-PANEL,INSTRUMENT	1		R DRIVE 41 1	
	2	68100-13930	ASSY-PANEL,INSTRUMENT	1	1	L DRIVE 41 1	
	3	68300-10600	ASSY-PAD,INSTRUMENT,UPPER	1		R DRIVE 41 1	
	4	68300-10850	ASSY-PAD,INSTRUMENT,UPPER.	1		L DRIVE 41 1	
	5	68230-10600	FINISH-DEMISTER NOZZLE	4		411	
	6	00911-14010	NUT TO FIX INSTRUMENT PANEL	4		411	
	7	00915-11010	WASHER-LOCK TO FIX INSTRUMENT PANEL	4	100	411	
	8	00915-41010	WASHER-PLAIN TO FIX INSTRUMENT PANEL	4		411	
	9	00314-01210	SCREW TO FIX INSTRUMENT PAD,UPPER	2	50	411	
	10	00911-14010	NUT TO FIX INSTRUMENT PAD,UPPER	2		411	
	11	00915-11010	WASHER-LOCK TO FIX INSTRUMENT PAD,UPPER	2	100	411	
	12	00915-41010	WASHER-PLAIN TO FIX INSTRUMENT PAD,UPPER	2		411	
*	13	68350-10600	ASSY-PAD,INSTRUMENT,LOWER(R.H.)	1		R DRIVE 41 1	
	14	68350-16500	ASSY-PAD,INSTRUMENT,LOWER(R.H.)	1	1	R DRIVE 41 1	Y
*	15	68350-10800	ASSY-PAD,INSTRUMENT,LOWER(R.H.)	1	1	L DRIVE 41 1	
	16	68350-17000	ASSY-PAD,INSTRUMENT,LOWER(R.H.)	1		L DRIVE 41 1	Y

Printed in Japan

REVISED: SEPTEMBER,1968

S	KEY NO.	PART NO.	PART NAME	Q'TY	SALES UNIT	MODEL	ICA
*	17	68351-10600	ASSY-PAD,INSTRUMENT,LOWER(L.H.)	1		R DRIVE 411	
	18	68351-16500	ASSY-PAD,INSTRUMENT,LOWER(L.H.)	1	1	R DRIVE 411	Y
	19	68351-10800	ASSY-PAD,INSTRUMENT,LOWER(L.H.)	1		L DRIVE 411	
	20	68351-17000	ASSY-PAD,INSTRUMENT,LOWER(L.H.)	1	5	L DRIVE 411	Y
	21	68354-16500	PROTECTOR-INSTRUMENT LOWER PAD	1	1	411	
	22	00911-14010	NUT	8		411	
	23	00915-11010	WASHER-LOCK	8	100	411	
	24	68401-13200	ASSY-METER COVER(TO APR-66)	1	1	411	
	25	25010-16500	ASSY-METER COVER(FROM MAY-'66)	1	1	411	N
	26	00913-44410	NUT-WING TO FIX METER COVER	3		411	
	27	00915-11410	WASHER-LOCK TO FIX METER COVER	3		411	
	28	00915-41410	WASHER-PLAIN TO FIX METER COVER	2		411	
	29	68831-13200	BRACKET-FIXING KNOB	1	1	411	
	30	68143-16500	PLUG-HEATER KNOB	1		411	
	31	00911-14410	NUT TO FIX KNOB BRACKET	3		411	
	32	00915-11410	WASHER-LOCK TO FIX KNOB BRACKET	3		411	
	33	68860-10650	SET-MOULDING,INSTRUMENT,UPPER	1		411	
	34	68865-10600	CLIP-MOULDING,INSTRUMENT	6	1	411	
	35	68866-10600	RETAINER-MOULDING,INSTRUMENT	2	10	411	

Printed in Japan

REVISED: SEPTEMBER,1968

S	KEY NO.	PART NO.	PART NAME	Q'TY	SALES UNIT	MODEL	ICA
	36	00915-10610	WASHER-LOCK TO FIX MOULDING,UPPER	2		411	
	37	00915-40610	WASHER-PLAIN TO FIX MOULDING,UPPER	2		411	
	38	00911-10610	NUT TO FIX MOULDING,UPPER	2		411	
	39	68861-10650	SET-MOULDING,INSTRUMENT,LOWER	1	1	R DRIVE 411	
	40	68861-10850	SET-MOULDING,INSTRUMENT,LOWER	1	1	L DRIVE 411	
	41	68865-10600	CLIP-MOULDING,INSTRUMENT	2	1	411	
	42	68866-10600	RETAINER-MOULDING,INSTRUMENT	1	10	411	
	43	00915-10610	WASHER-LOCK TO FIX MOULDING,LOWER	2		411	
	44	00915-40610	WASHER-PLAIN TO FIX MOULDING,LOWER	2		411	
	45	00911-10610	NUT TO FIX MOULDING,LOWER	2		411	
*	46	27040-10600	ASSY-NOZZLE,DEMISTER(R.H.)	1	1	411	
*	47	27041-10600	ASSY-NOZZLE,DEMISTER(L.H.)	1	1	411	
	48	00915-11010	WASHER-LOCK TO FIX NOZZLE	2	100	411	
	49	00911-14010	NUT TO FIX NOZZLE	2		411	
	50	00915-41410	WASHER-PLAIN TO FIX INSTRUMENT ASSY,UPPER	3		411	
	51	00915-11410	WASHER-LOCK TO FIX INSTRUMENT ASSY,UPPER	3		411	
	52	00913-44410	NUT-WING TO FIX INSTRUMENT ASSY,UPPER	3		411	
	53	00114-41210	BOLT TO FIX INSTRUMENT ASSY,SIDE	2		411	

Printed in Japan

REVISED: SEPTEMBER,1968

S	KEY NO.	PART NO.	PART NAME	Q'TY	SALES UNIT	MODEL	ICA
	54	00915-11410	WASHER-LOCK TO FIX INSTRUMENT ASSY,SIDE	2		411	
	55	00915-41410	WASHER-PLAIN TO FIX INSTRUMENT ASSY,SIDE	2		411	
	56	68871-10600	PLUG-INSTRUMENT	2	1	A,B TYPE 411	
*	57	96500-13200	ASSY-ASH TRAY(BLACK)	1	1	411	
*	58	96500-10600	ASSY-ASH TRAY	1	2	411	Y
	59	68880-10600	MASK-RADIO APERTURE	1	1	411	
*	60	00918-10500	SPIRE-FIXING	2	50	411	
	61	68875-10600	WASHER-INSTRUMENT	5	5	411	
	62	66501-10600	ASSY-CONTROL BOX,AIR VENTILATOR	1	1	411	
	63	66510-10600	PACKING-AIR VENTILATOR	1	1	411	
	64	66513-10601	SPRING-AIR VENTILATOR LID	1	1	411	
	65	66514-10600	BUMPER-AIR VENTILATOR LID	1	1	411	
	66	66515-10600	KNOB-AIR VENTILATOR LEVER	1	1	411	
	67	66569-32200	SCREW	1	2	411	
	68	00469-01210	SCREW TO FIX CONTROL BOX	7	50	411	
	69	00915-41010	WASHER-PLAIN TO FIX CONTROL BOX	7		411	
	70	00915-11010	WASHER-LOCK TO FIX CONTROL BOX	7	100	411	
	71	00911-14010	NUT TO FIX CONTROL BOX	7		411	
*	72	46470-10600	ASSY-BRACKET,PEDAL & STEERING COLUMN(FROM OCT.-'66)	1		R DRIVE 1.3L EXC. UTK	

REVISED: SEPTEMBER,1968

Printed in Japan

S	KEY NO.	PART NO.	PART NAME	Q'TY	SALES UNIT	MODEL	ICA
	73	46470-15830	ASSY-BRACKET,PEDAL & STEERING COLUMN(FROM OCT.-'66)	1	1	R DRIVE 1.6L UTK 411	
	74	46470-10850	ASSY-BRACKET,PEDAL & STEERING COLUMN(TO SEP-66)	1	1	L DRIVE 1.3L 411	
	75	46470-18701	ASSY-BRACKET,PEDAL & STEERING COLUMN(FROM OCT-66)	1		L DRIVE 1.3L 411	
	76	46470-16030	ASSY-BRACKET,PEDAL & STEERING COLUMN(TO SEP-66) U-817765,WPL411-U(T)-813770 TO FIX BRAKE DISC	1		L DRIVE 1.6L 411	
	77	46470-19501	ASSY-BRACKET,PEDAL & STEERING COLUMN(FROM OCT.-'66)	1	1	L DRIVE 1.6L 411	N
	78	48324-10600	CLAMP-STEERING COLUMN UPPER	1	1	411	
	79	48326-10600	CLAMP-STEERING COLUMN LOWER	1		411	
	80	48325-04100	PACKING-RUBBER,STEERING COLUMN	1	5	411	
	81	00114-41410	BOLT TO FIX STEERING BRACKET TO DASH UPPER	8	50	R DRIVE 411	
	82	00915-11410	WASHER-LOCK TO FIX STEERING BRACKET TO DASH UPPER	8		R DRIVE 411	
	83	00915-41410	WASHER-PLAIN TO FIX STEERING BRACKET TO DASH UPPER	3		R DRIVE 411	
	84	00915-51410	WASHER-PLAIN TO FIX STEERING BRACKET TO DASH UPPER	5		R DRIVE 411	
	85	00911-11410	NUT TO FIX STEERING BRACKET TO DASH UPPER	2		R DRIVE 411	
	86	00114-41610	BOLT TO FIX STEERING BRACKET TO DASH UPPER	5	50	L DRIVE 411	

Printed in Japan

REVISED: SEPTEMBER,1968

S	KEY NO.	PART NO.	PART NAME	Q'TY	SALES UNIT	MODEL	ICA
	87	00915-11410	WASHER-LOCK TO FIX STEERING BRACKET TO DASH UPPER	5		L DRIVE 411	
	88	00915-41410	WASHER-PLAIN TO FIX STEERING BRACKET TO DASH UPPER	2		L DRIVE 411	
	89	00915-51410	WASHER-PLAIN TO FIX STEERING BRACKET TO DASH UPPER	3		L DRIVE 411	
	90	00911-11410	NUT TO FIX STEERING BRACKET TO DASH UPPER	2		L DRIVE 411	
	91	00114-41810	BOLT TO FIX STEERING BRACKET TO IN-STRUMENT PANEL	2	100	411	
	92	00915-11410	WASHER-LOCK TO FIX STEERING BRACKET TO IN-STRUMENT PANEL	2		411	
	93	00915-41410	WASHER-PLAIN TO FIX STEERING BRACKET TO IN-STRUMENT PANEL	2		411	
	94	67830-10600	SEAL-AIR BOX SIDE	2	10	411	
	95	68600-10600	ASSY-PANEL,GLOVE BOX LID	1		R DRIVE 411	
	96	68600-10800	ASSY-PANEL,GLOVE BOX LID	1		L DRIVE 411	
	97	68228-10601	HINGE-GLOVE BOX LID,FEMALE	1	10	411	
	98	68609-10600	ROLLER-GLOVE BOX LID	2	1	411	
	99	68332-10600	PIN-HINGE,GLOVE BOX LID	2	1	411	
	100	68608-10600	SPRING-GLOVE BOX LID	1		411	
	101	00610-30400	RIVET	2		411	
*	102	68601-13250	BOX-GLOVE	1	1	R DRIVE 411	
*	103	68601-13350	BOX-GLOVE	1		L DRIVE 411	

Printed in Japan

REVISED: SEPTEMBER,1968

S	KEY NO.	PART NO.	PART NAME	Q'TY	SALES UNIT	MODEL	ICA
*	104	68635-09400	NUT-U TYPE.	4		411	
	105	00514-01010	SCREW TO FIX GLOVE BOX	4	50	411	
	106	00314-01210	SCREW TO FIX GLOVE BOX	1	50	411	
	107	00911-14010	NUT TO FIX GLOVE BOX	1		411	
	108	00915-41010	WASHER-PLAIN TO FIX GLOVE BOX	1		411	
	109	00314-01210	SCREW(TO FIX GLOVE BOX LID HINGE)	2	50	411	
	110	68630-11400	ASSY-LOCK,GLOVE BOX LID	1	5	R DRIVE 411 EXC.A TYPE	
	111	68630-10800	ASSY-LOCK,GLOVE BOX LID	1		L DRIVE 411 EXC.A TYPE	
	112	80590-10601	CLIP-RETAINING,CYLINDER LOCK	1	10	411	
	113	27135-10600	ASSY-LEVER,HEATER CONTROL(R.H.)	1		411	
	114	27145-10600	ASSY-LEVER,ROOM DEFROSTER(L.H.)	1	1	411	
	115	27155-10600	ASSY-ESCUTCHEON,HEATER CONTROL(R.H.)	1	5	411	
	116	27156-10600	ASSY-ESCUTCHEON,ROOM DEFROSTER(L.H.)	1	1	411	
	117	00915-40810	WASHER-PLAIN	4		411	
	118	00915-10810	WASHER-LOCK	4		411	
	119	00911-10810	NUT	4	50	411	
	120	68835-10600	FILLER-INSTRUMENT SIDE	2	1	411	
	121	85107-09400	CLIP	4		411	
*	122	96800-13200	ASSY-PACKAGE TRAY	1		R DRIVE 411	
	123	96800-16500	ASSY-PACKAGE TRAY	1	1	R DRIVE 411	Y

Printed in Japan

REVISED: SEPTEMBER,1968

S	KEY NO.	PART NO.	PART NAME	Q'TY	SALES UNIT	MODEL	ICA
*	124	96800-13300	ASSY-PACKAGE TRAY	1		L DRIVE 41 1	
	125	96800-17000	ASSY-PACKAGE TRAY	1	1	L DRIVE 41 1	Y

REVISED: SEPTEMBER,1968

Printed in Japan

NOTE

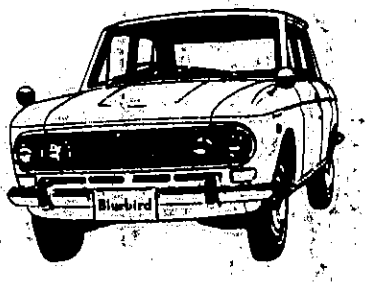

NOTE

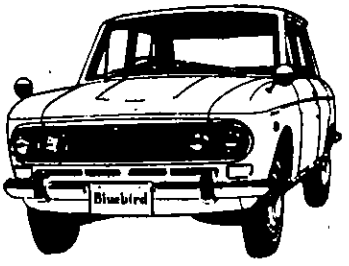

DASH TRIMMING

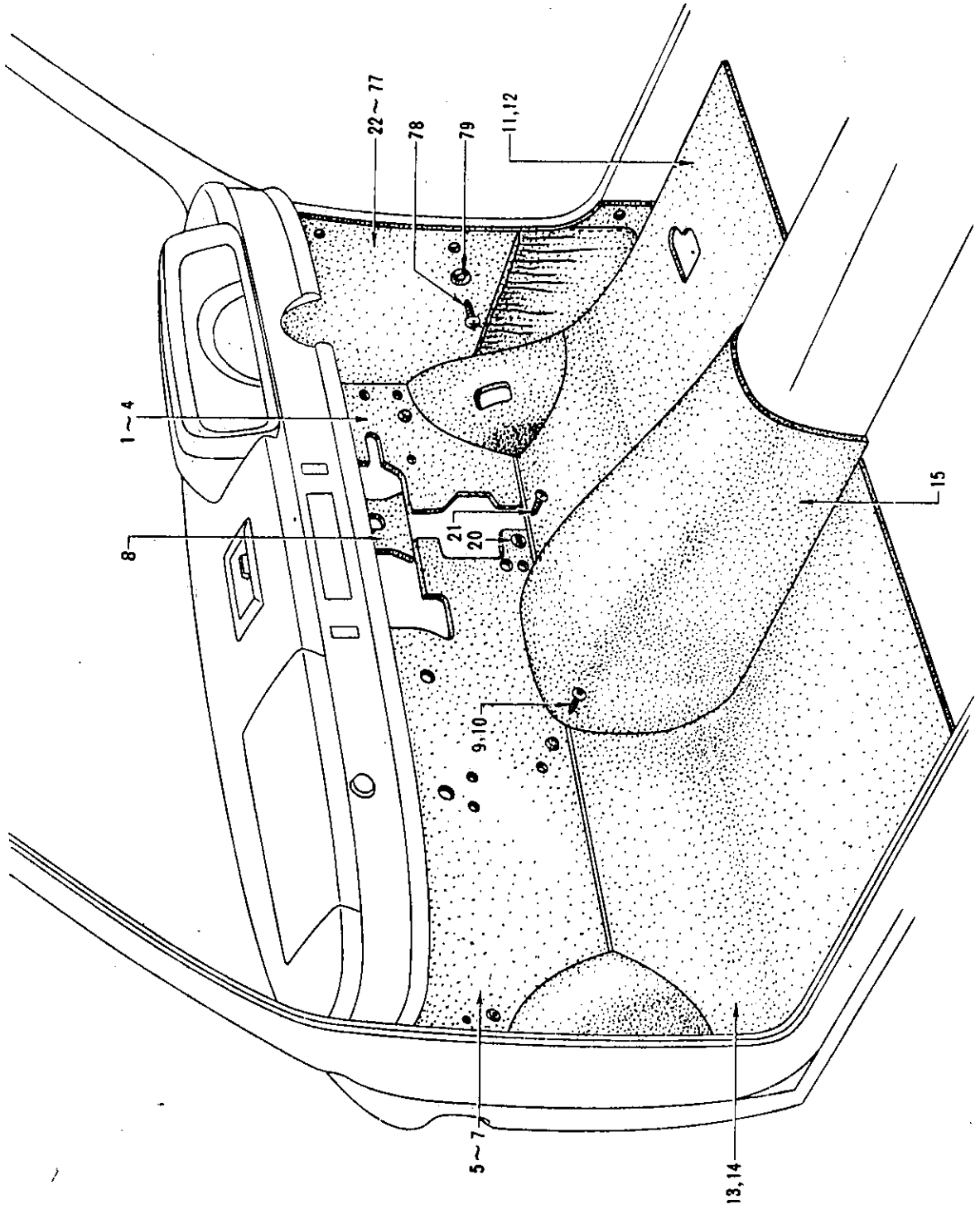

S	KEY NO.	PART NO.	PART NAME	Q'TY	SALES UNIT	MODEL	ICA
			DASH TRIMMING				
	1	67900-16500	ASSY-TRIM,DASH(R.H.)	1	1	R DRIVE 411	
	2	67900-17000	ASSY-TRIM,DASH(R.H.)(TO SEP-66)	1	1	L DRIVE 411	
	3	67900-18700	ASSY-TRIM,DASH(R.H.)(FROM OCT.-'66)	1		L DRIVE 411(EXC.RL-UAK,WRL-UAK)	N
	4	67900-24500	ASSY-TRIM,DASH(R.H.)	1	1	RL-UAK.WRL-UAK 411	
	5	67901-16500	ASSY-TRIM,DASH(L.H.)(TO SEP-66)	1	1	R DRIVE 411	
	6	67901-24000	ASSY-TRIM,DASH(L.H.)(FROM OCT.-'66)	1	1	R DRIVE 411	N
	7	67901-17000	ASSY-TRIM,DASH(L.H.)	1	1	L DRIVE 411	
	8	67902-10600	ASSY-TRIM,DASH PEDAL BRACKET	1		R DRIVE 411	
	9	67931-08700	FASTENER-TRIM	7	10	R DRIVE 411	
	10	67931-08700	FASTENER-TRIM	8	10	L DRIVE 411	
	11	67905-10600	INSULATOR-DASH UPPER,A(R.H.)	1		R DRIVE 411	
	12	67905-10800	INSULATOR-DASH UPPER,A(R.H.)	1	1	L DRIVE 411	
	13	67906-10600	INSULATOR-DASH UPPER,A(L.H.)	1	1	R DRIVE 411	
	14	67906-10800	INSULATOR-DASH UPPER,A(L.H.)	1	1	L DRIVE 411	
	15	67907-10800	INSULATOR-DASH UPPER,A(CENTER)	1		L DRIVE 411	

Printed in Japan

REVISED: SEPTEMBER,1968

S	KEY NO.	PART NO.	PART NAME	Q'TY	SALES UNIT	MODEL	ICA
	16	67908-10600	INSULATOR-DASH UPPER,B (R.H.)	1	1	R DRIVE 41 1	
	17	67908-10800	INSULATOR-DASH UPPER,B (R.H.)	1	1	L DRIVE 41 1	
	18	67909-10600	INSULATOR-DASH UPPER,B (L.H.)	1	1	R DRIVE 41 1	
	19	67909-10800	INSULATOR-DASH UPPER,B (L.H.)	1	1	L DRIVE 41 1	
	20	74933-30000	FASTENER-MALE	4		411	
	21	00530-61010	SCREW	4	50	411	
*	22	66900-13200	ASSY-TRIM,DASH SIDE WITH POCKET(R.H.)RED	1		R DRIVE 41 1	
	23	66900-16500	ASSY-TRIM,DASH SIDE WITH POCKET(R.H.)RED(TO SEP-66)	1	1	R DRIVE 41 1	Y
	24	66900-24000	ASSY-TRIM,DASH SIDE WITH POCKET(R.H.)RED(FROM OCT.-'66)	1	1	R DRIVE 41 1	N
	25	66901-13200	ASSY-TRIM,DASH SIDE WITHOUT POCKET(L.H.)RED	1	1	R DRIVE 41 1	
	26	66901-16500	ASSY-TRIM,DASH SIDE WITHOUT POCKET(L.H.)RED(TO SEP-66)	1	1	R DRIVE 41 1	Y
	27	66901-24000	ASSY-TRIM,DASH SIDE WITHOUT POCKET(L.H.)RED(FROM OCT.-'66)	1	1	R DRIVE 41 1	N
	28	66900-13201	ASSY-TRIM,DASH SIDE WITH POCKET(R.H.)BLUE	1		R DRIVE 41 1	
	29	66900-16501	ASSY-TRIM,DASH SIDE WITH POCKET(R.H.)BLUE(TO SEP-66)	1	1	R DRIVE 41 1	Y
	30	66900-24001	ASSY-TRIM,DASH SIDE WITH POCKET(R.H.)BLUE(FROM OCT.-'66)	1	1	R DRIVE 41 1	N
*	31	66901-13201	ASSY-TRIM,DASH SIDE WITHOUT POCKET(L.H.)BLUE	1	1	R DRIVE 41 1	

Printed in Japan

REVISED: SEPTEMBER,1968

S	KEY NO.	PART NO.	PART NAME	Q'TY	SALES UNIT	MODEL	ICA
	32	66901-16501	ASSY-TRIM,DASH SIDE WITHOUT POCKET(L.H.)BLUE (TO SEP-66)	1	1	R DRIVE 41 1	Y
	33	66901-24001	ASSY-TRIM,DASH SIDE WITHOUT POCKET(L.H.)BLUE (FROM OCT.-'66)	1	1	R DRIVE 41 1	N
	34	66900-13202	ASSY-TRIM,DASH SIDE WITH POCKET(R.H.)BROWN	1		R DRIVE 41 1	
	35	66900-16502	ASSY-TRIM,DASH SIDE WITH POCKET(R.H.)BROWN(TO SEP-66)	1	1	R DRIVE 41 1	N
	36	66900-24002	ASSY-TRIM,DASH SIDE WITH POCKET(R.H.)BROWN(FROM OCT.-'66)	1	1	R DRIVE 41 1	Y
	37	66901-13202	ASSY-TRIM,DASH SIDE WITHOUT POCKET(L.H.)BROWN	1	1	R DRIVE 41 1	
	38	66901-16502	ASSY-TRIM,DASH SIDE WITHOUT POCKET(L.H.)BROWN(TO SEP-66)	1	1	R DRIVE 41 1	Y
	39	66901-24002	ASSY-TRIM,DASH SIDE WITHOUT POCKET(L.H.)BROWN(FROM OCT.-'66)	1	1	R DRIVE 41 1	N
•	40	66900-13203	ASSY-TRIM,DASH SIDE WITH POCKET(R.H.)GREEN	1		R DRIVE 41 1	
	41	66900-16503	ASSY-TRIM,DASH SIDE WITH POCKET(R.H.)GREEN(TO SEP-66)	1	1	R DRIVE 41 1	Y
	42	66900-24003	ASSY-TRIM,DASH SIDE WITH POCKET(R.H.)GREEN(FROM OCT.-'66)	1	1	R DRIVE 41 1	N
	43	66901-13203	ASSY-TRIM,DASH SIDE WITHOUT POCKET(L.H.)GREEN	1		R DRIVE 41 1	
	44	66901-16503	ASSY-TRIM,DASH SIDE WITHOUT POCKET(L.H.)GREEN(TO SEP-66)	1	1	R DRIVE 41 1	Y

REVISED: SEPTEMBER,1968

Printed in Japan

S	KEY NO.	PART NO.	PART NAME	QTY	SALES UNIT	MODEL	ICA
	45	66901-24003	ASSY-TRIM,DASH SIDE WI THOUT POCKET(L.H.)GREE N(FROM OCT.-'66)	1	1	R DRIVE 41 1	N
*	46	66900-13300	ASSY-TRIM,DASH SIDE,WI THOUT POCKET(R.H.)RED	1		L DRIVE 41 1	
	47	66900-17000	ASSY-TRIM,DASH SIDE,WI THOUT POCKET(R.H.)RED(TO SEP-66)	1	1	L DRIVE 41 1	Y
	48	66900-18700	ASSY-TRIM,DASH SIDE,WI THOUT POCKET(R.H.)RED(FROM OCT.-'66)	1	1	L DRIVE 41 1	N
	49	66901-13300	ASSY-TRIM,DASH SIDE,WI TH POCKET(L.H.)RED	1		L DRIVE 41 1	
	50	66901-17000	ASSY-TRIM,DASH SIDE,WI TH POCKET(L.H.)RED(TO SEP-66)	1	1	L DRIVE 41 1	Y
	51	66901-18700	ASSY-TRIM,DASH SIDE,WI TH POCKET(L.H.)RED(FRO M OCT.-'66)	1	1	L DRIVE 41 1	N
	52	66900-13301	ASSY-TRIM,DASH SIDE,WI THOUT POCKET(R.H.)BLUE	1		L DRIVE 41 1	
	53	66900-17001	ASSY-TRIM,DASH SIDE,WI THOUT POCKET(R.H.)BLUE (TO SEP-	1	1	L DRIVE 41 1	Y
	54	66900-18701	ASSY-TRIM,DASH SIDE,WI THOUT POCKET(R.H.)BLUE (FROM OCT.-'66)	1	1	L DRIVE 41 1	N
	55	66901-13301	ASSY-TRIM,DASH SIDE,WI TH POCKET(L.H.)BLUE	1		L DRIVE 41 1	
	56	66901-17001	ASSY-TRIM,DASH SIDE,WI TH POCKET(L.H.)BLUE(TO SEP-66)	1	1	L DRIVE 41 1	Y
	57	66901-18701	ASSY-TRIM,DASH SIDE,WI TH POCKET(L.H.)BLUE(FR OM OCT.-'66)	1	1	L DRIVE 41 1	N
*	58	66900-13302	ASSY-TRIM,DASH SIDE,WI THOUT POCKET(R.H.)BROW N	1		L DRIVE 41 1	

Printed in Japan

REVISED: SEPTEMBER,1968

S	KEY NO.	PART NO.	PART NAME	Q'TY	SALES UNIT	MODEL	ICA
	59	66900-17002	ASSY-TRIM,DASH SIDE,WITHOUT POCKET(R.H.)BROWN(TO SEP-66)	1	1	L DRIVE 411	Y
	60	66900-18702	ASSY-TRIM,DASH SIDE,WITHOUT POCKET(R.H.)BROWN(FROM OCT.-'66)	1	1	L DRIVE 411	N
	61	66901-13302	ASSY-TRIM,DASH SIDE,WITH POCKET(L.H.)BROWN	1		L DRIVE 411	
	62	66901-17002	ASSY-TRIM,DASH SIDE,WITH POCKET(L.H.)BROWN(TO SEP-66)	1	1	L DRIVE 411	Y
	63	66901-18702	ASSY-TRIM,DASH SIDE,WITH POCKET(L.H.)BROWN(FROM OCT.-'66)	1		L DRIVE 411	N
	64	66900-13303	ASSY-TRIM,DASH SIDE,WITHOUT POCKET(R.H.)GREEN	1		L DRIVE 411	
	65	66900-17003	ASSY-TRIM,DASH SIDE,WITHOUT POCKET(R.H.)GREEN(TO SEP-66)	1	1	L DRIVE 411	Y
	66	66900-18703	ASSY-TRIM,DASH SIDE,WITHOUT POCKET(R.H.)GREEN(FROM OCT.-'66)	1	1	L DRIVE 411	N
	67	66901-13303	ASSY-TRIM,DASH SIDE,WITH POCKET(L.H.)GREEN	1		L DRIVE 411	
	68	66901-17003	ASSY-TRIM,DASH SIDE,WITH POCKET(L.H.)GREEN(TO SEP-66)	1	1	L DRIVE 411	Y
	69	66901-18703	ASSY-TRIM,DASH SIDE,WITH POCKET(L.H.)GREEN(FROM OCT.-'66)	1	1	L DRIVE 411	N
	70	66900-13900	ASSY-TRIM,DASH SIDE,WITH POCKET(R.H.)RICH BLACK	1	1	411 USA	
	71	66900-16002	ASSY-TRIM,DASH SIDE,WITH POCKET(R.H.)RICH BLACK	1	1	411 USA	Y

Printed in Japan

REVISED: SEPTEMBER,1968

S	KEY NO.	PART NO.	PART NAME	Q'TY	SALES UNIT	MODEL	ICA
	72	66901-13900	ASSY-TRIM,DASH SIDE,WITH POCKET(L.H.)RICH BLACK	1	1	411 USA	
	73	66901-16002	ASSY-TRIM,DASH SIDE,WITH POCKET(L.H.)RICH BLACK	1	1	411 USA	Y
	74	66900-16000	ASSY-TRIM,DASH SIDE,WITH POCKET(R.H.)RICH RED	1	1	411 USA	
	75	66900-16001	ASSY-TRIM,DASH SIDE,WITH POCKET(R.H.)RICH RED	1		411 USA	Y
	76	66901-16000	ASSY-TRIM,DASH SIDE,WITH POCKET(L.H.)RICH RED	1		411 USA	
	77	66901-16001	ASSY-TRIM,DASH SIDE,WITH POCKET(L.H.)RICH RED	1		411 USA	Y
	78	00530-61620	SCREW FIXING DASH SIDE TRIM	6		411	
	79	00915-80620	WASHER FIXING DASH SIDE TRIM	6	50	411	

NOTE

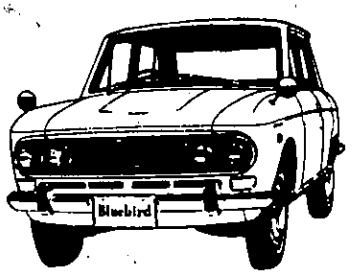

ROOF TRIMMING

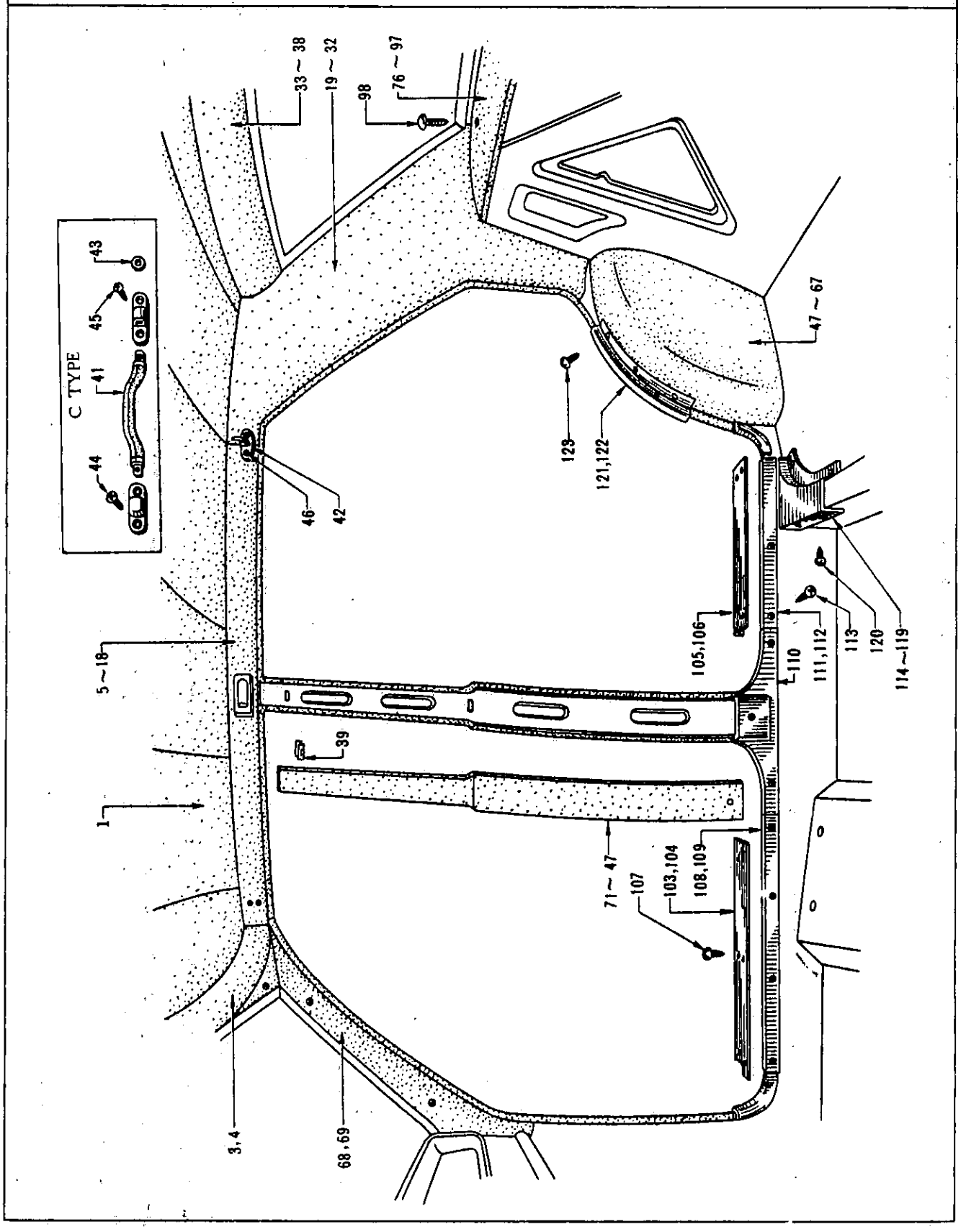

S	KEY NO.	PART NO.	PART NAME	Q'TY	SALES UNIT	MODEL	ICA
			ROOF TRIMMING				
	1	73910-10600	CLOTH-HEAD LINING	1		411	
	2	73910-10900	ASSY-CLOTH,HEAD LINING	1		WAGON 411	
	3	73911-10600	MOULDING-GARNISH,ROOF FRONT(GRAY)(TO C/# P411-196752,PL411-056484,R411-034541,RL411-009823)(WAGON TO JUNE-67)	1	1	411	
	4	73911-24000	MOULDING-GARNISH,ROOF FRONT(GRAY)(FROM C/# P411-196753,PL411-056485,R411-034542,RL411-009824)(WAGON FROM JULY-'67)	1	1	411	N
	5	73912-13200	MOULDING-GARNISH,ROOF SIDE(R.H.)(GRAY)(TO C/# P411-196752 PL411-056484,R411-034541,RL411-009823)	1	1	SEDAN A.B TYPE 411	
	6	73912-24000	MOULDING-GARNISH,ROOF SIDE(R.H.)(GRAY)(FROM C/# P411-196753,PL411-056485,R411-034542,RL411-009824)	1	1	SEDAN A.B TYPE 411	N
	7	73912-13600	MOULDING-GARNISH,ROOF SIDE(R.H.)(GRAY)(TO C/# P411-196752,PL411-056485)	1	1	SEDAN C TYPE 411	
	8	73912-24100	MOULDING-GARNISH,ROOF SIDE(R.H.)(GRAY)(FROM C/# P411-196753,PL411-056485)	1	1	SEDAN C TYPE 411	N
*	9	73912-10902	MOULDING-GARNISH,ROOF SIDE(R.H.)(TO C/# WP411-804158,WPL411-801239)	1		WAGON 411	

Printed in Japan

REVISED: SEPTEMBER,1968

S	KEY NO.	PART NO.	PART NAME	Q'TY	SALES UNIT	MODEL	ICA
	10	73912-17500	MOULDING-GARNISH,ROOF SIDE(R.H.)(FROM C/# WP 411-804159,WPL411-801240)	1	1	WAGON 411	Y
	11	73912-19800	MOULDING-GARNISH,ROOF SIDE(R.H.)(FROM JULY-'67)	1	1	WAGON 411	N
	12	73913-13200	MOULDING-GARNISH,ROOF SIDE(L.H.)(GRAY)(TO C/# P411-196752 PL411-056484 R411-034541 RL411-009823)	1	1	SEDAN A.B TYPE 411	
	13	73913-24000	MOULDING-GARNISH,ROOF SIDE(GRAY)(FROM C/# P411-196753,PL411-056485,R411-034542,RL411-009824)	1		SEDAN A.B TYPE 411	N
	14	73913-13600	MOULDING-GARNISH,ROOF SIDE(L.H.)(GRAY)(TO C/# P411-196752 PL411-056484)	1	1	SEDAN C TYPE 411	
	15	73913-24100	MOULDING-GARNISH,ROOF SIDE(L.H.)(GRAY)(FROM C/# P411-196753,PL411-056485)	1	1	C TYPE 411	N
	16	73913-10902	MOULDING-GARNISH,ROOF SIDE(L.H.)(TO C/# WP411-804158,WPL411-801239)	1	1	WAGON 411	
	17	73913-17500	MOULDING-GARNISH,ROOF SIDE(L.H.)(FROM C/# WP 411-804159,WPL411-801240)(TO JUNE-67)	1	1	WAGON 411	Y
	18	73913-19800	MOULDING-GARNISH,ROOF SIDE(L.H.)(FROM JULY-'67)	1		WAGON 411	N
	19	73914-13200	MOULDING-GARNISH,ROOF SIDE(R.H.)(GRAY)(TO C/# P411-196752 PL411-056484,R411-034541 RL411-009823)	1	1	SEDAN A & B TYPE 411	

Printed in Japan

REVISED: SEPTEMBER.1968

S	KEY NO.	PART NO.	PART NAME	QTY	SALES UNIT	MODEL	ICA
	20	73914-24000	MOULDING-GARNISH,REAR CORNER(R.H.)(GRAY)(FROM C/# P411-196753,PL411-056485,R411-034542,RL411-009824)	1	1	SEDAN A & B TYPE 411	N
	21	73914-13600	MOULDING-GARNISH,REAR CORNER(R.H.)(GRAY)(TO C/# P411-196752 PL411-056484)	1	1	SEDAN C TYPE 411	
	22	73914-24100	MOULDING-GARNISH,REAR CORNER(R.H.)(GRAY)(FROM C/# P411-196753,PL411-056485)	1	1	SEDAN C TYPE 411	N
*	23	73914-10902	MOULDING-GARNISH,REAR SIDE(R.H.)(TO C/# WP411-804158,WPL411-801239)	1		WAGON 411	
	24	73914-17500	MOULDING-GARNISH,REAR SIDE(R.H.)(FROM C/# WP411-804159,WPL411-801240)(TO JUNE-67)	1	1	WAGON 411	Y
	25	73914-19800	MOULDING-GARNISH,REAR SIDE(R.H.)(FROM JULY-'67)	1		WAGON 411	N
	26	73915-13200	MOULDING-GARNISH,REAR CORNER(L.H.)(GRAY)(TO C/# P411-196752,PL411-056484,R411-034541,RL411-009823)	1	1	SEDAN A & B TYPE 411	
	27	73915-24000	MOULDING-GARNISH,REAR CORNER(L.H.)(GRAY)(FROM C/# P411-196753,PL411-056485,R411-034542,RL411-009824)	1	1	SEDAN A & B TYPE 411	N
	28	73915-13600	MOULDING-GARNISH,REAR CORNER(L.H.)(GRAY)	1	1	SEDAN C TYPE 411	
	29	73915-24100	MOULDING-GARNISH,REAR CORNER(L.H.)(GRAY)(TO C/# P411-196752 PL411-056484)(FROM C/# P411-196753,PL411-056485)	1	1	SEDAN C TYPE 411	N

Printed in Japan

REVISED: SEPTEMBER,1968

S	KEY NO.	PART NO.	PART NAME	Q'TY	SALES UNIT	MODEL	ICA
*	30	73915-10902	MOULDING-GARNISH,REAR SIDE(L.H.)(TO C/# WP411-804158,WPL411-801239)	1		WAGON 411	
	31	73915-17500	MOULDING-GARNISH,REAR SIDE(L.H.)(FROM C/# WP411-804159,WPL411-801240 TO JUNE-67)	1	1	WAGON 411	Y
	32	73915-19800	MOULDING-GARNISH,REAR SIDE(L.H.)(FROM JULY-'67)	1	1	WAGON 411	N
	33	73916-10600	MOULDING-GARNISH,ROOF REAR(TO A)(TO SEP-65)	1	1	SEDAN 411	
*	34	73916-16500	MOULDING-GARNISH,ROOF REAR(FROM OCT.-'65 TO MAR-66)	1	1	SEDAN 411	N
	35	73916-18400	MOULDING-GARNISH,ROOF REAR(FROM APR.-'66)	1	1	SEDAN 411	Y
*	36	73916-10900	MOULDING-GARNISH,ROOF TAIL(TO C/# WP411-804158,WPL411-804158,WPL411-801239)	1		WAGON 411	
	37	73916-17400	MOULDING-GARNISH,ROOF TAIL(FROM C/# WP411-804159,WPL411-801240 TO MAR-67)	1	1	WAGON 411	Y
	38	73916-19600	MOULDING-GARNISH,ROOF TAIL(FROM JULY-'67)	1	1	WAGON 411	N
	39	73918-10601	FASTENER-GARNISH MOULDING	28	1	411	
	40	80999-11100	WASHER-TRIM	3	50	411	
	41	96700-11400	ASSY-ASSIST STRAP	2	1	UTK, 1.6L 411	
	42	96750-32201	HANGER-COAT	2	5	411(EXC.UTK & 1.6L)	
	43	96750-13600	HANGER-COAT	2	2	UTK,1.6L 411	
	44	00530-61620	SCREW-TAPPING	4	50	411	

Printed in Japan

REVISED: SEPTEMBER,1968

S	KEY NO.	PART NO.	PART NAME	Q'TY	SALES UNIT	MODEL	ICA
	45	00434-01620	SCREW	4	50	UTK,1.6L 411	
	46	00434-02510	SCREW	2		UTK,1.6L 411	
	47	76905-18400	ASSY-TRIM,REAR WHEEL HOUSE(R.H.)GRAY	1	1	SEDAN 411	
	48	76906-18400	ASSY-TRIM,REAR WHEEL HOUSE(L.H.)GRAY	1	1	SEDAN 411	
	49	76905-18401	ASSY-TRIM,REAR WHEEL HOUSE(R.H.)BLUE	1		SEDAN 411	
	50	76906-18401	ASSY-TRIM,REAR WHEEL HOUSE(L.H.)BLUE	1		SEDAN 411	
	51	76905-18402	ASSY-TRIM,REAR WHEEL HOUSE(R.H.)GREEN	1		SEDAN 411	
	52	76906-18402	ASSY-TRIM,REAR WHEEL HOUSE(L.H.)GREEN	1		SEDAN 411	
*	53	76906-18800	ASSY-TRIM,REAR WHEEL HOUSE(L.H.)RICH BLACK(TO SEP-66)	1	10	SEDAN 411(U.S.A.)	
	54	76905-18803	ASSY-TRIM,REAR WHEEL HOUSE,RICH BLACK(FROM OCT.-'66)	2	1	SEDAN 411(U.S.A.)	N
*	55	76905-18801	ASSY-TRIM,REAR WHEEL HOUSE(R.H.)RICH RED	1	2	SEDAN 411(U.S.A.)	
*	56	76906-18801	ASSY-TRIM,REAR WHEEL HOUSE(L.H.)RICH RED(TO SEP-66)	1	1	SEDAN 411(U.S.A.)	
	57	76905-18802	ASSY-TRIM,REAR SHEEL HOUSE,RICH RED(FROM OCT -'66)	2	2	SEDAN 411(U.S.A.)	N
	58	76905-10906	ASSY-TRIM,REAR WHEEL HOUSE R.H. BLUE	1		WAGON 411	
	59	76906-10906	ASSY-TRIM,REAR WHEEL HOUSE L.H.BLUE	1		WAGON 411	
	60	76905-10907	ASSY-TRIM,REAR WHEEL HOUSE R.H.BROWN	1		WAGON 411	

Printed in Japan

REVISED: SEPTEMBER,1968

S	KEY NO.	PART NO.	PART NAME	Q'TY	SALES UNIT	MODEL	ICA
	61	76906-10907	ASSY-TRIM,REAR WHEEL HOUSE L.H.BROWN	1		WAGON 411	
	62	76905-10908	ASSY-TRIM,REAR WHEEL HOUSE R.H.GREEN	1		WAGON 411	
	63	76906-10908	ASSY-TRIM,REAR WHEEL HOUSE L.H.GREEN	1		WAGON 411	
	64	76905-11002	ASSY-TRIM,REAR WHEEL HOUSE R.H.RICH BLACK	1		WAGON 411(U.S.A.)	
	65	76906-11002	ASSY-TRIM,REAR WHEEL HOUSE L.H.RICH BLACK	1		WAGON 411(U.S.A.)	
	66	76905-17501	ASSY-TRIM,REAR WHEEL HOUSE R.H.RICH RED	1		WAGON 411(U.S.A.)	
	67	76906-17501	ASSY-TRIM,REAR WHEEL HOUSE L.H.RICH RED	1		WAGON 411(U.S.A.)	
	68	76911-13200	MOULDING-GARNISH,WINDSHIELD PILLAR(R.H.)	1	1	411	
	69	76912-13200	MOULDING-GARNISH,WINDSHIELD PILLAR(L.H.)	1	1	411	
	70	00530-61320	SCREW-TAPPING	4	50	411	
	71	76921-13204	MOULDING-GARNISH,CENTER PILLAR(R.H.)GRAY(TO C/# P411-196752,PL411-056484,R411-034541,RL411-009823)(WAGON JUN-67)	1	1	411	
	72	76921-24000	MOULDING-GARNISH,CENTER PILLAR(R.H.)GRAY(FROM C/# P411-196753,PL411-056485,R411-034542,RL411-009824)(WAGON JULY-'67)	1	1	411	
	73	76922-13204	MOULDING-GARNISH,CENTER PILLAR(L.H.)GRAY(TO C/# P411-196752,PL411-056484,R411-034541,RL411-009823)(WAGON JUNE-67)	1	1	411	

Printed in Japan

REVISED: SEPTEMBER,1968

S	KEY NO.	PART NO.	PART NAME	Q'TY	SALES UNIT	MODEL	ICA
	74	76922-24000	MOULDING-GARNISH,CENTE R PILLAR(L.H.)GRAY(FRO M C/# P411-196753,PL41 1-056485,R411-034542,R L411-009824)(WAGON JUL Y-'67)	1	1	411	
	75	73918-10601	FASTENER-TRIM	10	1	411	
	76	79910-13200	ASSY-FINISH,PARCEL SHE LF(GRAY)(FROM APR-65 T O SEP-65)	1		SEDAN A &B TYPE 411 (EXC,RL-UA K,RL-UTK)	
	77	79910-13201	ASSY-FINISH,PARCEL SHE LF(BLUE)(FROM APR-65 T O SEP-65)	1		SEDAN A &B TYPE 411 (EXC,RL-UA K,RL-UTK)	
	78	79910-13203	ASSY-FINISH,PARCEL SHE LF(GREEN)(FROM APR-65 TO SEP-65)	1		SEDAN A &B TYPE 411 (EXC,RL-UA K,RL-UTK)	
	79	79910-13900	ASSY-FINISH,PARCEL SHE LF(BLACK)(FROM APR-65 TO SEP-65)	1		SEDAN A &B TYPE 411 (EXC,RL-UA K,RL-UTK)	
*	80	79910-13604	ASSY-FINISH,PARCEL SHE LF(GRAY)(FROM APR-65 T O SEP-65)	1	1	SEDAN C TYPE 411 (EXC,RL-UA K,RL-UTK)	
	81	79910-13605	ASSY-FINISH,PARCEL SHE LF(BLUE)(FROM APR-65 T O SEP-65)	1		SEDAN 411 (EXC,RL-UA K,RL-UTK)	
	82	79910-13606	ASSY-FINISH,PARCEL SHE LF(GREEN)(FROM APR-65 TO SEP-65)	1		SEDAN C TYPE 411 (EXC,RL-UA K,RL-UTK)	
	83	79910-16500	ASSY-FINISH,PARCEL SHE LF(GRAY)(FROM OCT-65 T O SEP-66)	1	1	SEDAN A &B TYPE 411 (EXC,RL-UA ,RL-UT)	
	84	79910-16501	ASSY-FINISH,PARCEL SHE LF(BLUE)(FROM OCT-65 T O SEP-66	1	1	SEDAN A &B 411 (EXC. RL-UA,RL-U T)	

Printed in Japan

REVISED: SEPTEMBER.1968

S	KEY NO.	PART NO.	PART NAME	QTY	SALES UNIT	MODEL	ICA
	85	79910-16502	ASSY-FINISH,PARCEL SHELF(GREEN)(FROM OCT-65 TO SEP-66)	1	1	SEDAN A &B TYPE 411 (EXC,RL-UA,RL-UT)	
	86	79910-17000	ASSY-FINISH,PARCEL SHELF(BLACK)(FROM OCT-65 TO SEP-66)	1	1	SEDAN A &B TYPE 411 (EXC.RL-UA.RL-UT)	
	87	79910-17001	ASSY-FINISH,PARCEL SHELF(RED)(FROM OCT-65 TO SEP-66)	1	1	SEDAN A &B TYPE 411 (EXC.RL-UA,RL-UT)	
	88	79910-16600	ASSY-FINISH,PARCEL SHELF(GRAY)(FROM OCT-65 TO SEP-66)	1		SEDAN C TYPE 411 (EXC.RL-UA,RL-UT)	
	89	79910-16601	ASSY-FINISH,PARCEL SHELF(BLUE)(FROM OCT-65 TO SEP-66)	1		SEDAN C TYPE 411 (EXC,RL-UA.RL-UT)	
	90	79910-16602	ASSY-FINISH,PARCEL SHELF(GREEN)(FROM OCT-65 TO SEP-66)	1	1	SEDAN C TYPE 411 (EXC.RL-UA,RL-UT)	
	91	79910-24000	ASSY-FINISH,PARCEL SHELF(RED)(FROM OCT-66)	1	1	411(EXC.U.S.A.)	
	92	79910-24001	ASSY-FINISH,PARCEL SHELF(BLUE)(FROM OCT-66)	1	1	411(EXC.U.S.A.)	
	93	79910-24002	ASSY-FINISH,PARCEL SHELF(BROWN)(FROM OCT-66)	1	1	411(EXC.U.S.A.)	
	94	79910-24003	ASSY-FINISH,PARCEL SHELF(GREEN)(FROM OCT-66)	1	1	411(EXC.U.S.A.)	
	95	79910-18801	ASSY-FINISH,PARCEL SHELF(RICH BLACK)(FROM OCT-66)	1	1	411(U.S.A.)	
	96	79910-18800	ASSY-FINISH,PARCEL SHELF(RICH RED)(FROM OCT-66)	1	1	411(U.S.A.)	
	97	80919-32200	CLIP-FINISH(FROM OCT-66)	5	10	411	

Printed in Japan

REVISED: SEPTEMBER,1968

S	KEY NO.	PART NO.	PART NAME	Q'TY	SALES UNIT	MODEL	ICA
	98	79915-10600	FASTENER-TRIM(FROM OCT -66)	7		411	
	99	79930-10600	SEALING-ASPHALT BOARD(FROM OCT-66)	1	1	411	
	100	00510-61010	SCREW-TAPPING(FROM OCT -66)	11	50	411	
	101	00530-61320	SCREW(FROM OCT-66)	2	50	411	
	102	00915-80620	WASHER-FINISH(FROM OCT -66)	2	50	411	
	103	76931-10600	PLATE-SCUFF,FRONT(R.H.)	1		411	
	104	76932-10600	PLATE-SCUFF,FRONT(L.H.)	1		411	
	105	76933-10601	PLATE-SCUFF,REAR(R.H.)	1	1	411	
*	106	76934-10601	PLATE-SCUFF,REAR(L.H.)	1		411	
	107	00510-61010	SCREW	22	50	411	
	108	76935-10600	RETAINER-SCUFF,FRONT(R .H.)	1	1	411	
	109	76936-10600	RETAINER-SCUFF,FRONT(L .H.)	1	1	411	
	110	76937-10601	RETAINER-SCUFF,CENTER	2	1	411	
	111	76939-10602	RETAINER-SCUFF,REAR(R. H.)	1		411	
	112	76940-10602	RETAINER-SCUFF,REAR(L. H.)	1		411	
	113	00530-61010	SCREW	18	50	411	
	114	76941-10601	FINISHER-CROSS MEMBER SIDE REAR(R.H.)	1	1	SEDAN 411	
	115	76942-10601	FINISHER-CROSS MEMBER SIDE REAR(L.H.)	1	1	SEDAN 411	
	116	76941-10901	FINISHER-CROSS MEMBER SIDE REAR(R.H.)	1	1	WAGON 411	

Printed in Japan

REVISED: SEPTEMBER,1968

J	KEY NO.	PART NO.	PART NAME	QTY	SALES UNIT	MODEL	ICA
	117	76941-10902	FINISHER-CROSS MEMBER SIDE REAR(R.H.)	1	1	WAGON 411	Y
	118	76942-10901	FINISHER-CROSS MEMBER SIDE REAR(L.H.)	1		WAGON 411	
	119	76942-10902	FINISHER-CROSS MEMBER SIDE REAR(L.H.)	1	1	WAGON 411	Y
	120	00510-61010	SCREW	8	50	411	
	121	76945-10600	RETAINER-WEATHERSTRIP, REAR WHEEL HOUSE(R.H.)	1		411	
	122	76946-10600	RETAINER-WEATHERSTRIP, REAR WHEEL HOUSE(L.H.)	1	10	411	
	123	00530-61310	SCREW	6	50	411	
	124	66174-01500	PLUG-RUBBER 7	1		411	
	125	86350-10600	PLUG-RUBBER(FOR DOOR SWITCH HOLE)	1		411	

Printed in Japan

REVISED: SEPTEMBER,1968

NOTE

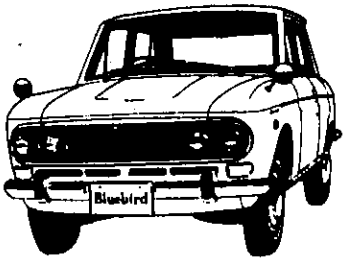

FLOOR TRIMMING (TO SEP-65)

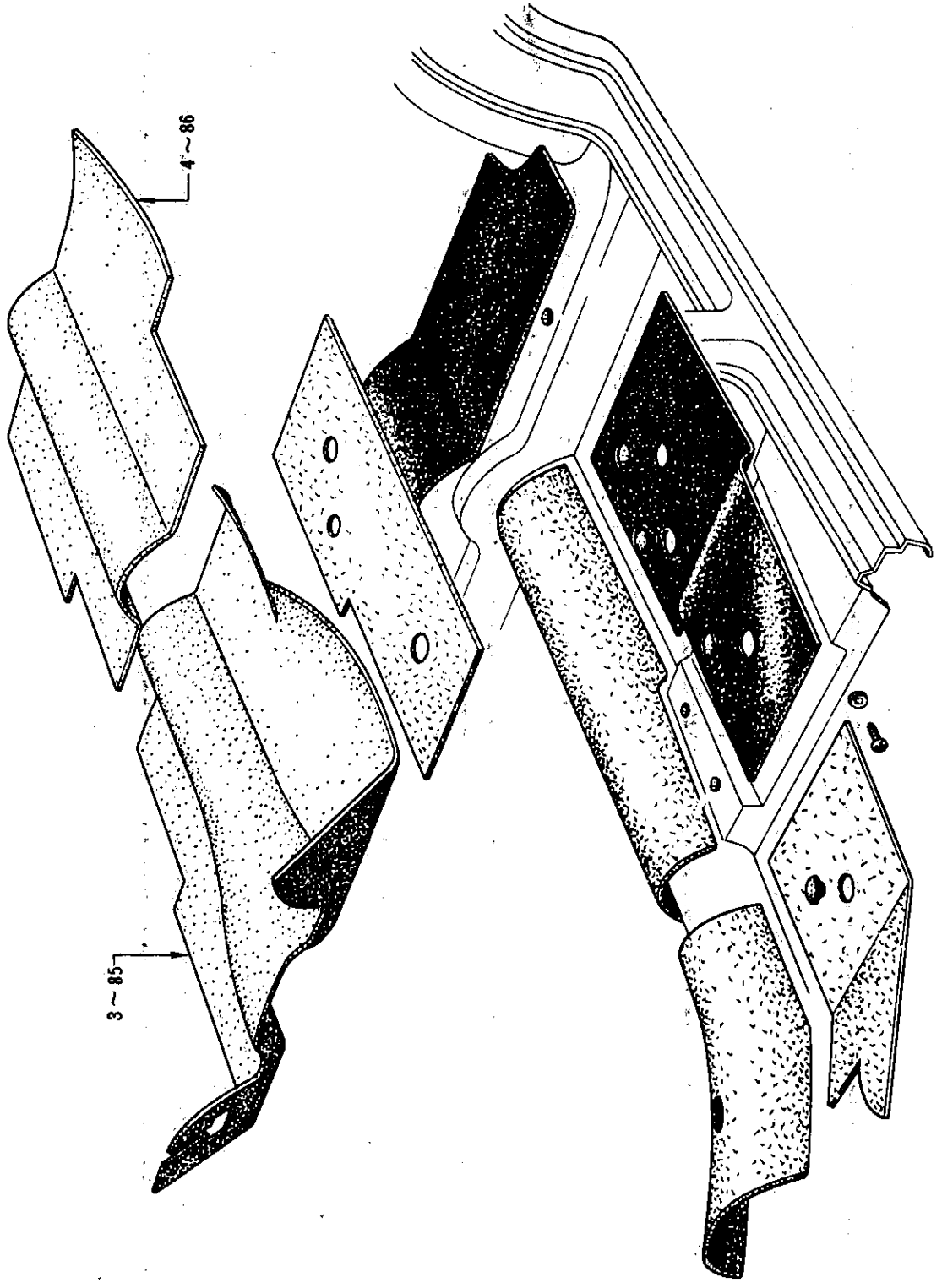

S	KEY NO.	PART NO.	PART NAME	Q'TY	SALES UNIT	MODEL	ICA
			FLOOR TRIMMING (TO SEP-65)				
	1	74902-16500	MAT-FRONT FLOOR VINYL FOR BENCH SEAT	1		411 U	
	2	74907-13200	MAT-REAR FLOOR VINYL FOR BENCH SEAT	1		411 U	
	3	74902-16608	CARPET-FRONT FLOOR RED FOR BENCH SEAT	1		411 U	
	4	74907-16600	CARPET-REAR FLOOR RED FOR BENCH SEAT	1		411 U	
	5	74902-16609	CARPET-FRONT FLOOR BLUE FOR BENCH SEAT	1		411 U	
	6	74907-16601	CARPET-REAR FLOOR BLUE FOR BENCH SEAT	1		411 U	
	7	74902-16610	CARPET-FRONT FLOOR BROWN FOR BENCH SEAT	1		411 U	
	8	74907-16602	CARPET-REAR FLOOR BROWN FOR BENCH SEAT	1		411 U	
	9	74902-16611	CARPET-FRONT FLOOR GREEN FOR BENCH SEAT	1		411 U	
	10	74907-16603	CARPET-REAR FLOOR GREEN FOR BENCH SEAT	1		411 U	
	11	74902-17900	MAT-FRONT FLOOR VINYL FOR SEPARATE SEAT	1		411 U	
	12	74907-11100	MAT-REAR FLOOR VINYL FOR SEPARATE SEAT	1	1	411 U	
	13	74902-16612	CARPET-FRONT FLOOR RED FOR SEPARATE SEAT	1		411 U	
	14	74907-16604	CARPET-REAR FLOOR RED FOR SEPARATE SEAT	1		411 U	
	15	74902-16613	CARPET-FRONT FLOOR BLUE FOR SEPARATE SEAT	1		411 U	

Printed in Japan

REVISED: SEPTEMBER,1968

S	KEY NO.	PART NO.	PART NAME	Q'TY	SALES UNIT	MODEL	ICA
	16	74907-16605	CARPET-REAR FLOOR BLUE FOR SEPARATE SEAT	1		411 U	
	17	74902-16614	CARPET-FRONT FLOOR BROWN FOR SEPARATE SEAT	1	1	411 LU	
	18	74907-16606	CARPET-REAR FLOOR BROWN FOR SEPARATE SEAT	1		411 LU	
	19	74902-16615	CARPET-FRONT FLOOR GREEN FOR SEPARATE SEAT	1	1	411 LU	
	20	74907-16607	CARPET-REAR FLOOR GREEN FOR SEPARATE SEAT	1	1	411 LU	
	21	74902-17000	MAT-FRONT FLOOR VINYL FOR BENCH SEAT	1	1	411 LU	
	22	74907-13200	MAT-REAR FLOOR VINYL FOR BENCH SEAT	1		411 LU	
	23	74902-17011	CARPET-FRONT FLOOR RED FOR BENCH SEAT	1	1	411 LU	
	24	74907-16600	CARPET-REAR FLOOR RED FOR BENCH SEAT	1		411 LU	
	25	74902-17012	CARPET-FRONT FLOOR BLUE FOR BENCH SEAT	1		411 LU	
	26	74907-16601	CARPET-REAR FLOOR BLUE FOR BENCH SEAT	1		411 LU	
	27	74902-17013	CARPET-FRONT FLOOR BROWN FOR BENCH SEAT	1	1	411 LU	
	28	74907-16602	CARPET-REAR FLOOR BROWN FOR BENCH SEAT	1		411 LU	
	29	74902-17014	CARPET-FRONT FLOOR GREEN FOR BENCH SEAT	1	1	411 LU	
	30	74907-16603	CARPET-REAR FLOOR GREEN FOR BENCH SEAT	1		411 LU	
	31	74902-17020	CARPET-FRONT FLOOR BLACK FOR BENCH SEAT	1	1	411 LU	
	32	74907-17000	CARPET-REAR FLOOR BLACK FOR BENCH SEAT	1		411 LU	

Printed in Japan

REVISED: SEPTEMBER, 1968

S	KEY NO.	PART NO.	PART NAME	Q'TY	SALES UNIT	MODEL	ICA
	33	74902-17001	MAT-FRONT FLOOR VINYL FOR SEPARATE SEAT	1		411 LU	
	34	74907-11101	MAT-REAR FLOOR VINYL FOR SEPARATE SEAT	1		411 LU	
	35	74902-17015	CARPET-FRONT FLOOR RED FOR SEPARATE SEAT	1		411 LU	
	36	74907-16604	CARPET-REAR FLOOR RED FOR SEPARATE SEAT	1		411 LU	
	37	74902-17016	CARPET-FRONT FLOOR BLUE FOR SEPARATE SEAT	1		411 LU	
	38	74907-16605	CARPET-REAR FLOOR BLUE FOR SEPARATE SEAT	1		411 LU	
	39	74902-17017	CARPET-FRONT FLOOR BROWN FOR SEPARATE SEAT	1		411 LU	
	40	74907-16606	CARPET-REAR FLOOR BROWN FOR SEPARATE SEAT	1		411 LU	
	41	74902-17018	CARPET-FRONT FLOOR GREEN FOR SEPARATE SEAT	1		411 LU	
	42	74907-16607	CARPET-REAR FLOOR GREEN FOR SEPARATE SEAT	1	1	411 LU	
	43	74902-16946	MAT-FRONT FLOOR VINYL FOR BENCH SEAT	1		411 UT	
	44	74907-13200	MAT-REAR FLOOR VINYL FOR BENCH SEAT	1		411 UT	
	45	74902-16918	CARPET-FRONT FLOOR RED FOR BENCH SEAT	1		411 UT	
	46	74907-16600	CARPET-REAR FLOOR RED FOR BENCH SEAT	1		411 UT	
	47	74902-16919	CARPET-FRONT FLOOR BLUE FOR BENCH SEAT	1		411 UT	
	48	74907-16601	CARPET-REAR FLOOR BLUE FOR BENCH SEAT	1		411 UT	
	49	74902-16920	CARPET-FRONT FLOOR BROWN FOR BENCH SEAT	1		411 UT	

REVISED: SEPTEMBER, 1968

Printed in Japan

S	KEY NO.	PART NO.	PART NAME	Q'TY	SALES UNIT	MODEL	ICA
	50	74907-16602	CARPET-REAR FLOOR BROWN FOR BENCH SEAT	1		411 UT	
	51	74902-16921	CARPET-FRONT FLOOR GREEN FOR BENCH SEAT	1		411 UT	
	52	74907-16603	CARPET-REAR FLOOR GREEN FOR BENCH SEAT	1		411 UT	
	53	74902-16947	MAT-FRONT FLOOR VINYL FOR SEPARATE SEAT	1		411 UT	
	54	74907-11101	MAT-REAR FLOOR VINYL FOR SEPARATE SEAT	1		411 UT	
	55	74902-16922	CARPET-FRONT FLOOR RED FOR SEPARATE SEAT	1		411 UT	
	56	74907-16604	CARPET-REAR FLOOR RED FOR SEPARATE SEAT	1		411 UT	
	57	74902-16923	CARPET-FRONT FLOOR BLUE FOR SEPARATE SEAT	1		411 UT	
	58	74907-16605	CARPET-REAR FLOOR BLUE FOR SEPARATE SEAT	1		411 UT	
	59	74902-16924	CARPET-FRONT FLOOR BROWN FOR SEPARATE SEAT	1		411 UT	
	60	74907-16606	CARPET-REAR FLOOR BROWN FOR SEPARATE SEAT	1		411 UT	
	61	74902-16925	CARPET-FRONT FLOOR GREEN FOR SEPARATE SEAT	1	1	411 UT	
	62	74907-16607	CARPET-REAR FLOOR GREEN FOR SEPARATE SEAT	1	1	411 UT	
	63	74902-17146	MAT-FRONT FLOOR VINYL FOR BENCH SEAT	1		411 LUT	
	64	74907-13200	MAT-REAR FLOOR VINYL FOR BENCH SEAT	1		411 LUT	
	65	74902-17120	CARPET-FRONT FLOOR FOR BENCH SEAT	1		411 LUT	
	66	74907-16600	CARPET-REAR FLOOR RED FOR BENCH SEAT	1		411 LUT	

Printed in Japan

REVISED: SEPTEMBER, 1968

S	KEY NO.	PART NO.	PART NAME	Q'TY	SALES UNIT	MODEL	ICA
	67	74902-17121	CARPET-FRONT FLOOR BLUE FOR SEPARATE SEAT	1		411 LUT	
	68	74907-16601	CARPET-REAR FLOOR BLUE FOR SEPARATE SEAT	1		411 LUT	
	69	74902-17122	CARPET-FRONT FLOOR BROWN FOR SEPARATE SEAT	1		411 LUT	
	70	74907-16602	CARPET-REAR FLOOR BROWN FOR SEPARATE SEAT	1		411 LUT	
	71	74902-17123	CARPET-FRONT FLOOR GREEN FOR SEPARATE SEAT	1		411 LUT	
	72	74907-16603	CARPET-REAR FLOOR GREEN FOR SEPARATE SEAT	1		411 LUT	
	73	74902-17129	CARPET-FRONT FLOOR BLACK FOR SEPARATE SEAT	1	1	411 LUT	
	74	74907-17000	CARPET-REAR FLOOR BLACK FOR SEPARATE SEAT	1		411 LUT	
	75	74902-17131	MAT-FRONT FLOOR VINYL FOR SEPARATE SEAT	1	1	411 LUT	
	76	74907-11101	MAT-REAR FLOOR VINYL FOR SEPARATE SEAT	1		411 LUT	
	77	74902-17124	CARPET-FRONT FLOOR RED FOR SEPARATE SEAT	1		411 LUT	
	78	74907-16604	CARPET-REAR FLOOR RED FOR SEPARATE SEAT	1		411 LUT	
	79	74902-17125	CARPET-FRONT FLOOR BLUE FOR SEPARATE SEAT	1		411 LUT	
	80	74907-16605	CARPET-REAR FLOOR BLUE FOR SEPARATE SEAT	1		411 LUT	
	81	74902-17126	CARPET-FRONT FLOOR BROWN FOR SEPARATE SEAT	1		411 LUT	
	82	74907-16606	CARPET-REAR FLOOR BROWN FOR SEPARATE SEAT	1		411 LUT	
	83	74902-17127	CARPET-FRONT FLOOR GREEN FOR SEPARATE SEAT	1		411 LUT	

Printed in Japan

REVISED: SEPTEMBER, 1968

S	KEY NO.	PART NO.	PART NAME	Q'TY	SALES UNIT	MODEL	ICA
	84	74907-16607	CARPET-REAR FLOOR GREEN FOR SEPARATE SEAT	1	1	411 LUT	
	85	74902-17128	CARPET-FRONT FLOOR BLACK FOR SEPARATE SEAT	1		411 LUT	
	86	74907-17000	CARPET-REAR FLOOR BLACK FOR SEPARATE SEAT	1		411 LUT	

Printed in Japan

REVISED: SEPTEMBER,1968

NOTE

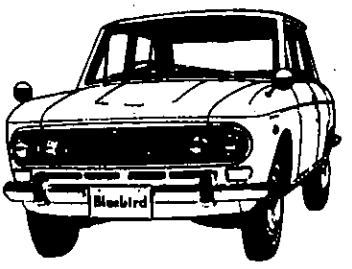

FLOOR TRIMMING (FROM OCT-65 TO SEP-66)

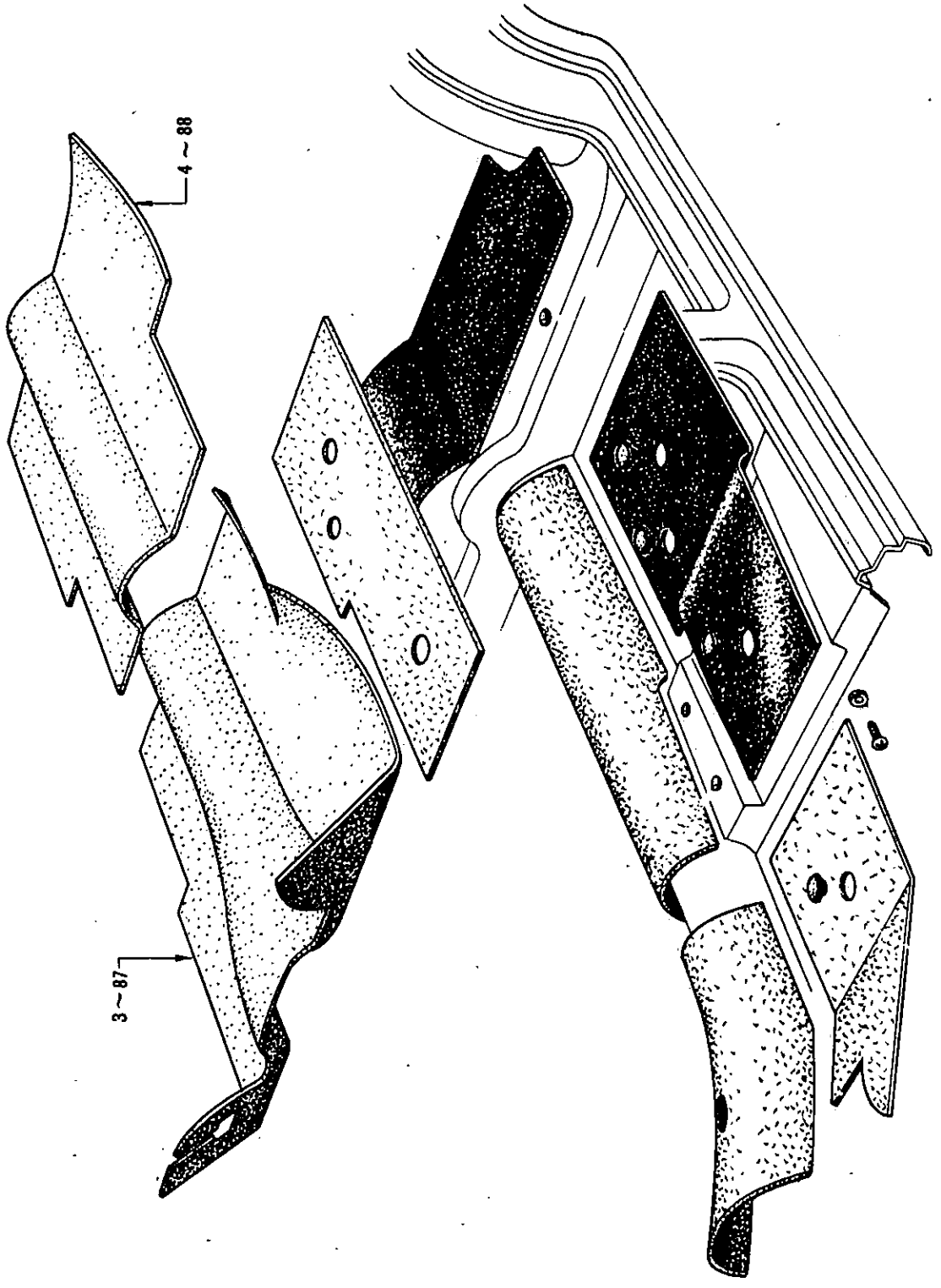

S	KEY NO.	PART NO.	PART NAME	Q'TY	SALES UNIT	MODEL	ICA
			FLOOR TRIMMING (FROM OCT-65 TO SEP-66)				
	1	74902-16500	MAT-FRONT FLOOR VINYL FOR BENCH SEAT(FROM OCT-65 TO SEP-66)	1		411 U	
	2	74907-13200	MAT-REAR FLOOR VINYL FOR BENCH SEAT(FROM OCT-65 TO SEP-66)	1		411 U	
	3	74902-16608	CARPET-FRONT FLOOR RED FOR BENCH SEAT(FROM OCT-65 TO SEP-66)	1		411 U	
	4	74907-16600	CARPET-REAR FLOOR RED FOR BENCH SEAT(FROM OCT-65 TO SEP-66)	1		411 U	
	5	74902-16609	CARPET-FRONT FLOOR BLUE FOR BENCH SEAT(FROM OCT-65 TO SEP-66)	1		411 U	
	6	74907-16601	CARPET-REAR FLOOR BLUE FOR BENCH SEAT(FROM OCT-65 TO SEP-66)	1		411 U	
	7	74902-16610	CARPET-FRONT FLOOR BROWN FOR BENCH SEAT(FROM OCT-65 TO SEP-66)	1		411 U	
	8	74907-16602	CARPET-REAR FLOOR BROWN FOR BENCH SEAT(FROM OCT-65 TO SEP-66)	1		411 U	
	9	74902-16611	CARPET-FRONT FLOOR GREEN FOR BENCH SEAT(FROM OCT-65 TO SEP-66)	1		411 U	
	10	74907-16603	CARPET-REAR FLOOR GREEN FOR BENCH SEAT(FROM OCT-65 TO SEP-66)	1		411 U	
	11	74902-17900	MAT-FRONT FLOOR VINYL FOR SEPARATE SEAT(FROM OCT-65 TO SEP-66)	1		411 U	

Printed in Japan

REVISED: SEPTEMBER, 1968

S	KEY NO.	PART NO.	PART NAME	Q'TY	SALES UNIT	MODEL	ICA
	12	74907-11100	MAT-REAR FLOOR VINYL FOR SEPARATE SEAT(FROM OCT-65 TO SEP-66)	1	1	411 U	
	13	74902-16612	CARPET-FRONT FLOOR RED FOR SEPARATE SEAT(FROM OCT-65 TO SEP-66)	1		411 U	
	14	74907-16604	CARPET-REAR FLOOR RED FOR SEPARATE SEAT(FROM OCT-65 TO SEP-66)	1		411 U	
	15	74902-16613	CARPET-FRONT FLOOR BLUE FOR SEPARATE SEAT(FROM OCT-65 TO SEP-66)	1		411 U	
	16	74907-16605	CARPET-REAR FLOOR BLUE FOR SEPARATE SEAT(FROM OCT-65 TO SEP-66)	1		411 U	
	17	74902-16614	CARPET-FRONT FLOOR BROWN FOR SEPARATE SEAT(FROM OCT-65 TO SEP-66)	1	1	411 U	
	18	74907-16606	CARPET-REAR FLOOR BROWN FOR SEPARATE SEAT(FROM OCT-65 TO SEP-66)	1		411 U	
	19	74902-16615	CARPET-FRONT FLOOR GREEN FOR SEPARATE SEAT(FROM OCT-65 TO SEP-66)	1	1	411 U	
	20	74907-16607	CARPET-REAR FLOOR GREEN FOR SEPARATE SEAT(FROM OCT-65 TO SEP-66)	1	1	411 U	
	21	74902-17000	MAT-FRONT FLOOR VINYL FOR BENCH SEAT(FROM OCT-65 TO SEP-66)	1	1	411 LU	
	22	74907-13200	MAT-REAR FLOOR VINYL FOR BENCH SEAT(FROM OCT-65 TO SEP-66)	1		411 LU	
	23	74902-17011	CARPET-FRONT FLOOR RED FOR BENCH SEAT(FROM OCT-65 TO SEP-66)	1	1	411 LU	
	24	74907-16600	CARPET-REAR FLOOR RED FOR BENCH SEAT(FROM OCT-65 TO SEP-66)	1		411 LU	

Printed in Japan

REVISED: SEPTEMBER,1968

S	KEY NO.	PART NO.	PART NAME	Q'TY	SALES UNIT	MODEL	ICA
	25	74902-17012	CARPET-FRONT FLOOR BLUE FOR BENCH SEAT(FROM OCT-65 TO SEP-66)	1		411 LU	
	26	74907-16601	CARPET-REAR FLOOR BLUE FOR BENCH SEAT(FROM OCT-65 TO SEP-66)	1		411 LU	
	27	74902-17013	CARPET-FRONT FLOOR BROWN FOR BENCH SEAT(FROM OCT-65 TO SEP-66)	1	1	411 LU	
	28	74907-16602	CARPET-REAR FLOOR BROWN FOR BENCH SEAT(FROM OCT-65 TO SEP-66)	1		411 LU	
	29	74902-17014	CARPET-FRONT FLOOR GREEN FOR BENCH SEAT(FROM OCT-65 TO SEP-66)	1	1	411 LU	
	30	74907-16603	CARPET-REAR FLOOR GREEN FOR BENCH SEAT(FROM OCT-65 TO SEP-66)	1		411 LU	
	31	74902-17001	MAT-FRONT FLOOR VINYL FOR SEPA-RATE SEAT(FROM OCT-65 TO SEP-66)	1		411 LU	
	32	74907-11101	MAT-REAR FLOOR VINYL FOR SEPA-RATE SEAT(FROM OCT-65 TO SEP-66)	1		411 LU	
	33	74902-17015	CARPET-FRONT FLOOR RED FOR SEPA-RATE SEAT(FROM OCT-65 TO SEP-66)	1		411 LU	
	34	74907-16604	CARPET-REAR FLOOR RED FOR SEPA-RATE SEAT(FROM OCT-65 TO SEP-66)	1		411 LU	
	35	74902-17016	CARPET-FRONT FLOOR BLUE FOR SEPA-RATE SEAT(FROM OCT-65 TO SEP-66)	1		411 LU	
	36	74907-16605	CARPET-REAR FLOOR BLUE FOR SEPA-RATE SEAT(FROM OCT-65 TO SEP-66)	1		411 LU	
	37	74902-17017	CARPET-FRONT FLOOR BROWN FOR SEPA-RATE SEAT(FROM OCT-65 TO SEP-66)	1		411 LU	

Printed in Japan

REVISED: SEPTEMBER,1968

S	KEY NO.	PART NO.	PART NAME	Q'TY	SALES UNIT	MODEL	ICA
	38	74907-16606	CARPET-REAR FLOOR BROWN FOR SEPA-RATE SEAT(FROM OCT-65 TO SEP-66)	1		411 LU	
	39	74902-17018	CARPET-FRONT FLOOR GREEN FOR SEPA-RATE SEAT(FROM OCT-65 TO SEP-66)	1		411 LU	
	40	74907-16607	CARPET-REAR FLOOR GREEN FOR SEPA-RATE SEAT(FROM OCT-65 TO SEP-66)	1	1	411 LU	
	41	74902-16900	MAT-FRONT FLOOR VINYL FOR BENCH SEAT(FROM OCT-65 TO SEP-66)	1	1	411 UT	
	42	74907-13200	MAT-REAR FLOOR VINYL FOR BENCH SEAT(FROM OCT-65 TO SEP-66)	1		411 UT	
	43	74902-16910	CARPET-FRONT FLOOR RED FOR BENCH SEAT(FROM OCT-65 TO SEP-66)	1		411 UT	
	44	74907-16600	CARPET-REAR FLOOR RED FOR BENCH SEAT(FROM OCT-65 TO SEP-66)	1		411 UT	
	45	74902-16911	CARPET-FRONT FLOOR BLUE FOR BENCH SEAT(FROM OCT-65 TO SEP-66)	1	1	411 UT	
	46	74907-16601	CARPET-REAR FLOOR BLUE FOR BENCH SEAT(FROM OCT-65 TO SEP-66)	1		411 UT	
	47	74902-16912	CARPET-FRONT FLOOR BROWN FOR BENCH SEAT(FROM OCT-65 TO SEP-66)	1		411 UT	
	48	74907-16602	CARPET-REAR FLOOR BROWN FOR BENCH SEAT(FROM OCT-65 TO SEP-66)	1		411 UT	
	49	74902-16913	CARPET-FRONT FLOOR GREEN FOR BENCH SEAT(FROM OCT-65 TO SEP-66)	1		411 UT	
	50	74907-16603	CARPET-REAR FLOOR GREEN FOR BENCH SEAT(FROM OCT-65 TO SEP-66)	1		411 UT	

Printed in Japan

REVISED: SEPTEMBER,1968

S	KEY NO.	PART NO.	PART NAME	QTY	SALES UNIT	MODEL	ICA
	51	74902-16901	MAT-FRONT FLOOR VINYL FOR SEPARATE SEAT(FROM OCT-65 TO SEP-66)	1		411 UT	
	52	74907-11101	MAT-REAR FLOOR VINYL FOR SEPARATE SEAT(FROM OCT-65 TO SEP-66)	1		411 UT	
	53	74902-16914	CARPET-FRONT FLOOR RED FOR SEPA-RATE SEAT(FROM OCT-65 TO SEP-66)	1		411 UT	
	54	74907-16604	CARPET-REAR FLOOR RED FOR SEPA-RATE SEAT(FROM OCT-65 TO SEP-66)	1		411 UT	
	55	74902-16915	CARPET-FRONT FLOOR BLUE FOR SEPARATE SEAT(FROM OCT-65 TO SEP-66)	1		411 UT	
	56	74907-16605	CARPET-REAR FLOOR BLUE FOR SEPARATE SEAT(FROM OCT-65 TO SEP-66)	1		411 UT	
	57	74902-16916	CARPET-FRONT FLOOR BROWN FOR SEPARATE SEAT(FROM OCT-65 TO SEP-66)	1		411 UT	
	58	74907-16606	CARPET-REAR FLOOR BROWN FOR SEPARATE SEAT(FROM OCT-65 TO SEP-66)	1		411 UT	
	59	74902-16917	CARPET-FRONT FLOOR GREEN FOR SEPARATE SEAT(FROM OCT-65 TO SEP-66)	1		411 UT	
	60	74907-16607	CARPET-REAR FLOOR GREEN FOR SEPARATE SEAT(FROM OCT-65 TO SEP-66)	1	1	411 UT	
	61	74902-17100	MAT-FRONT FLOOR VINYL FOR BENCH SEAT(FROM OCT-65 TO SEP-66)	1		411 LUT	
	62	74907-13200	MAT-REAR FLOOR VINYL FOR BENCH SEAT(FROM OCT-65 TO SEP-66)	1		411 LUT	
	63	74902-17111	CARPET-FRONT FLOOR RED FOR BENCH SEAT(FROM OCT-65 TO SEP-66)	1		411 LUT	

REVISED: SEPTEMBER,1968

Printed in Japan

S	KEY NO.	PART NO.	PART NAME	Q'TY	SALES UNIT	MODEL	ICA
	64	74907-16600	CARPET-REAR FLOOR RED FOR BENCH SEAT(FROM OCT-65 TO SEP-66)	1		411 LUT	
	65	74902-17112	CARPET-FRONT FLOOR BLUE FOR BENCH SEAT(FROM OCT-65 TO SEP-66)	1		411 LUT	
	66	74907-16601	CARPET-REAR FLOOR BLUE FOR BENCH SEAT(FROM OCT-65 TO SEP-66)	1		411 LUT	
	67	74902-17113	CARPET-FRONT FLOOR BROWN FOR BENCH SEAT(FROM OCT-65 TO SEP-66)	1		411 LUT	
	68	74907-16602	CARPET-REAR FLOOR BROWN FOR BENCH SEAT(FROM OCT-65 TO SEP-66)	1		411 LUT	
	69	74902-17114	CARPET-FRONT FLOOR GREEN FOR BENCH SEAT(FROM OCT-65 TO SEP-66)	1		411 LUT	
	70	74907-16603	CARPET-REAR FLOOR GREEN FOR BENCH SEAT(FROM OCT-65 TO SEP-66)	1		411 LUT	
	71	74902-17101	MAT-FR FLOOR VINYL FOR SEPARATE(FROM OCT-65 TO SEP-66	1		411 LUT	
	72	74907-11101	MAT-RR FLOOR VINYL FOR SEPARATE(FROM OCT-65 TO SEP-66	1		411 LUT	
	73	74902-17115	CARPET-FR FLOOR RED SEPARATE(FROM OCT-65 TO SEP-66)	1		411 UT	
	74	74907-16604	CARPET-RR FLOOR RED SEPARATE(FROM OCT-65 TO SEP-66)	1		411 UT	
	75	74902-17116	CARPET-FRONT FLOOR BLUE FOR SEPARATE SEAT(FROM OCT-65 TO SEP-66)	1		411 LUT	
	76	74907-16605	CARPET-REAR FLOOR BLUE FOR SEPARATE SEAT(FROM OCT-65 TO SEP-66)	1		411 LUT	

Printed in Japan

REVISED: SEPTEMBER, 1968

S	KEY NO.	PART NO.	PART NAME	Q'TY	SALES UNIT	MODEL	ICA
	77	74902-17117	CARPET-FRONT FLOOR BROWN FOR SEPARATE SEAT(FROM OCT-65 TO SEP-66)	1		411 LUT	
	78	74907-16606	CARPET-REAR FLOOR BROWN FOR SEPARATE SEAT(FROM OCT-65 TO SEP-66)	1		411 LUT	
	79	74902-17118	CARPET-FRONT FLOOR GREEN FOR SEPARATE SEAT(FROM OCT-65 TO SEP-66)	1		411 LUT	
	80	74907-16607	CARPET-REAR FLOOR GREEN FOR SEPARATE SEAT(FROM OCT-65 TO SEP-66)	1	1	411 LUT	
	81	74902-17119	CARPET-FRONT FLOOR BLACK FOR SEPARATE SEAT(FROM OCT-65 TO SEP-66)	1		411 LUT	
	82	74907-13900	CARPET-REAR FLOOR BLACK FOR SEPARATE SEAT(FROM OCT-65 TO SEP-66)	1		411 LUT	
	83	74902-15802	CARPET-FR FLOOR RED SEPARATE(FROM OCT-65 TO SEP-66)	1		411 UTK	
	84	74907-16604	CARPET-RR FLOOR RED SEPARATE(FROM OCT-65 TO SEP-66)	1		411 UTK	
	85	74902-17206	CARPET-FR FLOOR BLUE SEPARATE(FROM OCT-65 TO SEP-66)	1		411 UTK	
	86	74907-16605	CARPET-RR FLOOR BLUE SEPARATE(FROM OCT-65 TO SEP-66)	1		411 UTK	
	87	74902-17207	CARPET-FR FLOOR BROWN SEPARATE(FROM OCT-65 TO SEP-66	1		411 UTK	
	88	74907-16606	CARPET-RR FLOOR BROWN SEPARATE(FROM OCT-65 TO SEP-66	1		411 UTK	

Printed in Japan

REVISED: SEPTEMBER,1968

NOTE

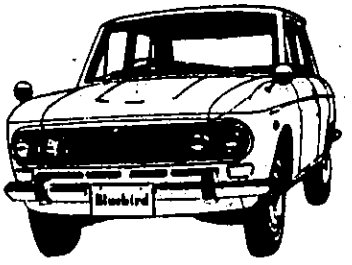

NOTE

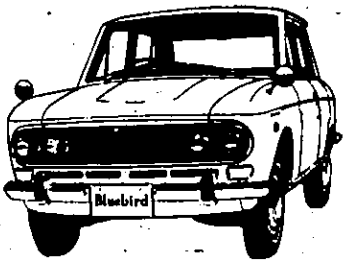

FLOOR TRIMMING (FROM OCT-66)

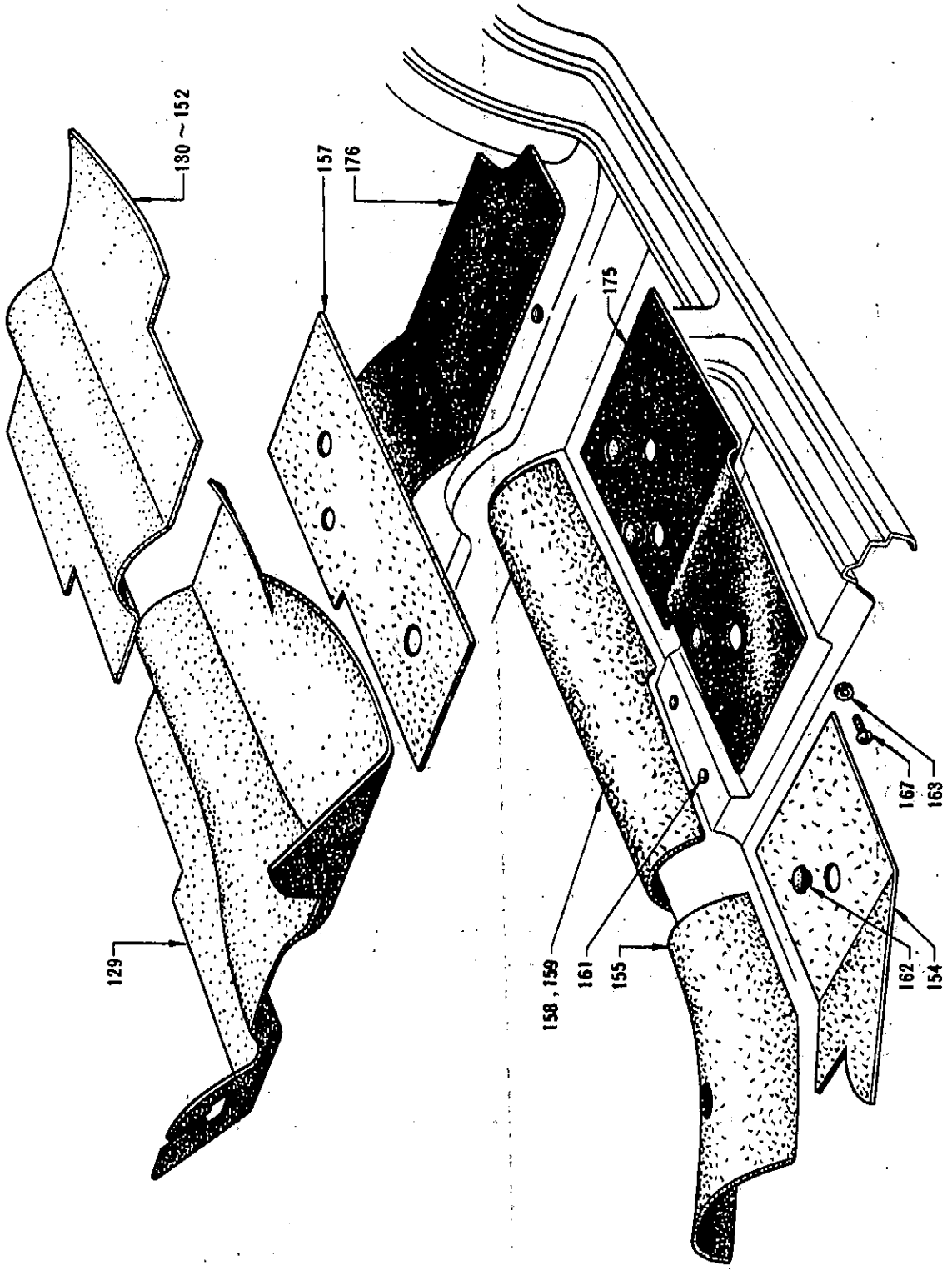

S	KEY NO.	PART NO.	PART NAME	Q'TY	SALES UNIT	MODEL	ICA
			FLOOR TRIMMING (FROM OCT-66)				
	1	74902-24000	MAT-FRONT FLOOR VINYL FOR BENCH SEAT(FROM OCT-66) 5 TO SEP-66)	1		411 U	
	2	74907-24000	MAT-REAR FLOOR VINYL FOR BENCH SEAT(FROM OCT-66)	1		411 U	
	3	74902-24100	CARPET-FRONT FLOOR RED FOR BENCH SEAT(FROM OCT-66)	1	1	411 U	
	4	74907-16600	CARPET-REAR FLOOR RED FOR BENCH SEAT(FROM OCT-66)	1		411 U	
	5	74902-24101	CARPET-FRONT FLOOR BLUE FOR BENCH SEAT(FROM OCT-66)	1		411 U	
	6	74907-16601	CARPET-REAR FLOOR BLUE FOR BENCH SEAT(FROM OCT-66)	1		411 U	
	7	74902-24102	CARPET-FRONT FLOOR BROWN FOR BENCH SEAT(FROM OCT-66)	1		411 U	
	8	74907-16602	CARPET-REAR FLOOR BROWN FOR BENCH SEAT(FROM OCT-66)	1		411 U	
	9	74902-24103	CARPET-FRONT FLOOR GREEN FOR BENCH SEAT(FROM OCT-66)	1		411 U	
	10	74907-24100	CARPET-REAR FLOOR GREEN FOR BENCH SEAT(FROM OCT-66)	1		411 U	
	11	74902-24300	MAT-FRONT FLOOR VINYL FOR SEPARATE SEAT(FROM OCT-66)	1		411 U	

Printed in Japan

REVISED: SEPTEMBER,1968

S	KEY NO.	PART NO.	PART NAME	Q'TY	SALES UNIT	MODEL	ICA
	12	74907-24300	MAT-REAR FLOOR VINYL FOR SEPARATE SEAT(FROM OCT-66)	1		411 U	
	13	74902-24104	CARPET-FRONT FLOOR RED FOR SEPARATE SEAT(TO C/# P411-057524)	1		411 U	
	14	74907-16604	CARPET-REAR FLOOR RED FOR SEPARATE SEAT(TO C/# P411-057524)	1		411 U	
	15	74902-24105	CARPET-FRONT FLOOR BLUE FOR SEPARATE SEAT(TO C/# P411-057524)	1		411 U	
	16	74907-16605	CARPET-REAR FLOOR BLUE FOR SEPARATE SEAT(TO C/# P411-057524)	1		411 U	
	17	74902-24106	CARPET-FRONT FLOOR BROWN FOR SEPARATE SEAT(TO C/# P411-057524)	1		411 U	
	18	74907-16606	CARPET-REAR FLOOR BROWN FOR SEPARATE SEAT(TO C/# P411-057524)	1		411 U	
	19	74902-24107	CARPET-FRONT FLOOR GREEN FOR SEPARATE SEAT(TO C/# P411-057524)	1		411 U	
	20	74907-24101	CARPET-REAR FLOOR GREEN FOR SEPARATE SEAT(TO C/# P411-057524)	1		411 U	
	21	74902-24400	CARPET-FRONT RED FOR SEPARATE SEAT(FROM C/# P411-057525)	1		411 U	
	22	74907-17900	CARPET-REAR RED FOR SEPARATE SEAT(FROM C/# P411-057525)	1		411 U	
	23	74902-24401	CARPET-FRONT BLUE FOR SEPARATE SEAT(FROM C/# P411-057525)	1		411 U	
	24	74907-17901	CARPET-REAR BLUE FOR SEPARATE SEAT(FROM C/# P411-057525)	1		411 U	

REVISED: SEPTEMBER,1968

Printed in Japan

S	KEY NO.	PART NO.	PART NAME	Q'TY	SALES UNIT	MODEL	ICA
	25	74902-24402	CARPET-FRONT BROWN FOR SEPARATE SEAT(FROM C/# P411-057525)	1		411 U	
	26	74907-17902	CARPET-REAR BROWN FOR SEPARATE SEAT(FROM C/# P411-057525)	1	1	411 U	
	27	74902-24403	CARPET-FRONT GREEN FOR SEPARATE SEAT(FROM C/# P411-057525)	1	1	411 U	
	28	74907-17903	CARPET-REAR GREEN FOR SEPARATE SEAT(FROM C/# P411-057525)	1		411 U	
	29	74902-18700	MAT-FRONT FLOOR VINYL FOR BENCH SEAT(FROM OCT-66)	1	1	411 LU	
	30	74907-24000	MAT-REAR FLOOR VINYL FOR BENCH SEAT(FROM OCT-66)	1		411 LU	
	31	74902-18705	CARPET-FRONT FLOOR RED FOR BENCH SEAT(FROM OCT-66)	1		411 LU	
	32	74907-16600	CARPET-REAR FLOOR RED FOR BENCH SEAT(FROM OCT-66)	1		411 LU	
	33	74902-18706	CARPET-FRONT FLOOR BLUE FOR BENCH SEAT(FROM OCT-66)	1		411 LU	
	34	74907-16601	CARPET-REAR FLOOR BLUE FOR BENCH SEAT(FROM OCT-66)	1		411 LU	
	35	74902-18707	CARPET-FRONT FLOOR BROWN FOR BENCH SEAT(FROM OCT-66)	1		411 LU	
	36	74907-16602	CARPET-REAR FLOOR BROWN FOR BENCH SEAT(FROM OCT-66)	1		411 LU	
	37	74902-18708	CARPET-FRONT FLOOR GREEN FOR BENCH SEAT(FROM OCT-66)	1	1	411 LU	

REVISED: SEPTEMBER,1968

Printed in Japan

S	KEY NO.	PART NO.	PART NAME	Q'TY	SALES UNIT	MODEL	ICA
	38	74907-24100	CARPET-REAR FLOOR GREEN FOR BENCH SEAT(FROM OCT-66)	1		411 LU	
	39	74902-18709	CARPET-FRONT FLOOR BLACK FOR BENCH SEAT(FROM OCT-66)	1	1	411 LU	
	40	74907-17000	CARPET-REAR FLOOR BLACK FOR BENCH SEAT(FROM OCT-66)	1		411 LU	
	41	74902-18701	MAT-FRONT FLOOR VINYL FOR SEPARATE SEAT(FROM OCT-66)	1	1	411 LU	
	42	74907-24300	MAT-REAR FLOOR VINYL FOR SEPARATE SEAT(FROM OCT-66)	1		411 LU	
	43	74902-18710	CARPET-FRONT FLOOR RED FOR SEPARATE SEAT(TO C/# PL411-200375)	1		411 LU	
	44	74907-16604	CARPET-REAR FLOOR RED FOR SEPARATE SEAT(TO C/# PL411-200375)	1		411 LU.	
	45	74902-18711	CARPET-FRONT FLOOR BLUE FOR SEPARATE SEAT(TO C/# PL411-200375)	1	1	411 LU	
	46	74907-16605	CARPET-REAR FLOOR BLUE FOR SEPARATE SEAT(TO C/# PL411-200375)	1		411 LU	
	47	74902-18712	CARPET-FRONT FLOOR BROWN FOR SEPARATE SEAT(TO C/# PL411-200375)	1		411 LU	
	48	74907-16606	CARPET-REAR FLOOR BROWN FOR SEPARATE SEAT(TO C/# PL411-200375)	1		411 LU	
	49	74902-18713	CARPET-FRONT FLOOR GREEN FOR SEPARATE SEAT(TO C/# PL411-200375)	1		411 LU	
	50	74907-24101	CARPET-REAR FLOOR GREEN FOR SEPARATE SEAT(TO C/# PL411-200375)	1		411 LU	

Printed in Japan

REVISED: SEPTEMBER, 1968

S	KEY NO.	PART NO.	PART NAME	Q'TY	SALES UNIT	MODEL	ICA
	51	74902-18714	CARPET-FRONT FLOOR BLACK FOR SEPARATE SEAT(TO C/# PL411-200375)	1		411 LU	
	52	74907-15800	CARPET-REAR FLOOR BLACK FOR SEPARATE SEAT(TO C/# PL411-200375)	1		411 LU	
	53	74902-18725	CARPET-FRONT RED FOR SEPARATE SEAT(FROM C/# PL411-200376)	1	1	411 LU	
	54	74907-17900	CARPET-REAR RED FOR SEPARATE SEAT(FROM C/# PL411-200376)	1		411 LU	
	55	74902-18726	CARPET-FRONT BLUE FOR SEPARATE SEAT(FROM C/# PL411-200376)	1	1	411 LU	
	56	74907-17901	CARPET-REAR BLUE FOR SEPARATE SEAT(FROM C/# PL411-200376)	1		411 LU	
	57	74902-18727	CARPET-FRONT BROWN FOR SEPARATE SEAT(FROM C/# PL411-200376)	1	1	411 LU	
	58	74907-17902	CARPET-REAR BROWN FOR SEPARATE SEAT(FROM C/# PL411-200376)	1	1	411 LU	
	59	74902-18728	CARPET-FRONT GREEN FOR SEPARATE SEAT(FROM C/# PL411-200376)	1	1	411 LU	
	60	74907-24400	CARPET-REAR GREEN FOR SEPARATE SEAT(FROM C/# PL411-200376)	1	1	411 LU	
	61	74902-18729	CARPET-FRONT BLACK FOR SEPARATE SEAT(FROM C/# PL411-200376)	1	1	411 LU	
	62	74907-15801	CARPET-REAR BLACK FOR SEPARATE SEAT(FROM C/# PL411-200376)	1	1	411 LU	
	63	74902-19100	MAT-FRONT FLOOR VINYL FOR BENCH SEAT(FROM OCT-66)	1	1	411 UT	

REVISED: SEPTEMBER,1968

Printed in Japan

S	KEY NO.	PART NO.	PART NAME	Q'TY	SALES UNIT	MODEL	ICA
	64	74907-24000	MAT-REAR FLOOR VINYL FOR BENCH SEAT(FROM OCT-66)	1		411 UT	
	65	74902-19102	CARPET-FRONT FLOOR RED FOR BENCH SEAT(FROM OCT-66)	1		411 UT	
	66	74907-16600	CARPET-REAR FLOOR RED FOR BENCH SEAT(FROM OCT-66)	1		411 UT	
	67	74902-19103	CARPET-FRONT FLOOR BLUE FOR BENCH SEAT(FROM OCT-66)	1		411 UT	
	68	74907-16601	CARPET-REAR FLOOR BLUE FOR BENCH SEAT(FROM OCT-66)	1		411 UT	
	69	74902-19104	CARPET-FRONT FLOOR BROWN FOR BENCH SEAT(FROM OCT-66)	1		411 UT	
	70	74907-16602	CARPET-REAR FLOOR BROWN FOR BENCH SEAT(FROM OCT-66)	1		411 UT	
	71	74902-19105	CARPET-FRONT FLOOR GREEN FOR BENCH SEAT(FROM OCT-66)	1		411 UT	
	72	74907-24100	CARPET-REAR FLOOR GREEN FOR BENCH SEAT(FROM OCT-66)	1		411 UT	
	73	74902-19101	MAT-FRONT FLOOR VINYL FOR SEPARATE SEAT(FROM OCT-66)	1		411 LUT	
	74	74907-24300	MAT-REAR FLOOR VINYL FOR SEPARATE SEAT(FROM OCT-66)	1		411 LUT	
	75	74902-19401	CARPET-FRONT RED FOR SEPARATE SEAT(TO C/# P411-057524,R411-034815)	1		411 UT	
	76	74907-16604	CARPET-REAR RED FOR SEPARATE SEAT(TO C/# P411-057524,R411-034815)	1		411 UT	

Printed in Japan

REVISED: SEPTEMBER,1968

S	KEY NO.	PART NO.	PART NAME	Q'TY	SALES UNIT	MODEL	ICA
	77	74902-19402	CARPET-FRONT BLUE FOR SEPARATE SEAT(TO C/# P411-057524,R411-034815)	1		411 UT	
	78	74907-16605	CARPET-REAR BLUE FOR SEPARATE SEAT(TO C/# P411-057524,R411-034815)	1		411 UT	
	79	74902-19403	CARPET-FRONT BROWN FOR SEPARATE SEAT(TO C/# P411-057524,R411-034815)	1		411 UT	
	80	74907-16606	CARPET-REAR BROWN FOR SEPARATE SEAT(TO C/# P411-057524,R411-034815)	1		411 UT	
	81	74902-19404	CARPET-FRONT GREEN FOR SEPARATE SEAT(TO C/# P411-057524,R411-034815)	1		411 UT	
	82	74907-24101	CARPET-REAR GREEN FOR SEPARATE SEAT(TO C/# P411-057524,R411-034815)	1		411 UT	
	83	74902-18800	CARPET-FRONT BLACK FOR SEPARATE SEAT(TO C/# P411-057524,R411-034815)	1		411 UT	
	84	74907-15800	CARPET-REAR BLACK FOR SEPARATE SEAT(TO C/# P411-057524,R411-034815)	1		411 UT	
	85	74902-19405	CARPET-FRONT RED FOR SEPARATE SEAT(FROM C/# P411-057525,R411-034816)	1		411 UT	
	86	74907-17900	CARPET-REAR RED FOR SEPARATE SEAT(FROM C/# P411-057525,R411-034816)	1		411 UT	

REVISED: SEPTEMBER,1968

Printed in Japan

S	KEY NO.	PART NO.	PART NAME	Q'TY	SALES UNIT	MODEL	ICA
	87	74902-19406	CARPET-FRONT BLUE FOR SEPARATE SEAT(FROM C/# P411-057525,R411-034816)	1		411 UT	
	88	74907-17901	CARPET-REAR BLUE FOR SEPARATE SEAT(FROM C/# P411-057525,R411-034816)	1		411 UT	
	89	74902-19407	CARPET-FRONT BROWN FOR SEPARATE SEAT(FROM C/# P411-057525,R411-034816)	1		411 UT	
	90	74907-17902	CARPET-REAR BROWN FOR SEPARATE SEAT(FROM C/# P411-057525,R411-034816)	1	1	411 UT	
	91	74902-19408	CARPET-FRONT GREEN FOR SEPARATE SEAT(FROM C/# P411-057525,R411-034816)	1		411 UT	
	92	74907-24400	CARPET-REAR GREEN FOR SEPARATE SEAT(FROM C/# P411-057525,R411-034816)	1	1	411 UT	
	93	74902-18702	MAT-FRONT FLOOR VINYL FOR BENCH SEAT(FROM OCT-66)	1	1	411 LUT	
	94	74907-24000	MAT-REAR FLOOR VINYL FOR BENCH SEAT(FROM OCT-66)	1		411 LUT	
	95	74902-18715	CARPET-FRONT FLOOR RED FOR BENCH SEAT(FROM OCT-66)	1		411 LUT	
	96	74907-16600	CARPET-REAR FLOOR RED FOR BENCH SEAT(FROM OCT-66)	1		411 LUT	
	97	74902-18716	CARPET-FRONT FLOOR BLUE FOR BENCH SEAT(FROM OCT-66)	1		411 LUT	

Printed in Japan

REVISED: SEPTEMBER,1968

S	KEY NO.	PART NO.	PART NAME	Q'TY	SALES UNIT	MODEL	ICA
	98	74907-16602	CARPET-REAR FLOOR BLUE FOR BENCH SEAT(FROM OCT-66)	1		411 LUT	
	99	74902-18717	CARPET-FRONT FLOOR BROWN FOR BENCH SEAT(FROM OCT-66)	1		411 LUT	
	100	74907-16602	CARPET-REAR FLOOR BROWN FOR BENCH SEAT(FROM OCT-66)	1		411 LUT	
	101	74902-18718	CARPET-FRONT FLOOR GREEN FOR BENCH SEAT(FROM OCT-66)	1		411 LUT	
	102	74907-24100	CARPET-REAR FLOOR GREEN FOR BENCH SEAT(FROM OCT-66)	1		411 LUT	
	103	74902-18719	CARPET-FRONT FLOOR BLACK FOR BENCH SEAT(FROM OCT-66)	1		411 LUT	
	104	74907-15800	CARPET-REAR FLOOR BLACK FOR BENCH SEAT(FROM OCT-66)	1		411 LUT	
	105	74902-18702	MAT-FRONT FLOOR VINYL FOR SEPARATE SEAT(FROM OCT-66)	1	1	411 LUT	
	106	74907-24300	MAT-REAR FLOOR VINYL FOR SEPARATE SEAT(FROM OCT-66)	1		411 LUT	
	107	74902-18720	CARPET-FRONT FLOOR RED FOR SEPARATE SEAT(TO C/# P411-200376)	1		411 LUT	
	108	74907-16604	CARPET-REAR FLOOR RED FOR SEPARATE SEAT(TO C/# P411-200376)	1		411 LUT	
	109	74902-18721	CARPET-FRONT FLOOR BLUE FOR SEPARATE SEAT(FROM OCT-66)	1		411 LUT	
	110	74907-16605	CARPET-REAR FLOOR BLUE FOR SEPARATE SEAT(FROM OCT-66)	1		411 LUT	

Printed in Japan

REVISED: SEPTEMBER,1968

S	KEY NO.	PART NO.	PART NAME	Q'TY	SALES UNIT	MODEL	ICA
	111	74902-18722	CARPET-FRONT FLOOR BROWN FOR SEPARATE SEAT(FROM OCT-66)	1		411 LUT	
	112	74907-16606	CARPET-REAR FLOOR BROWN FOR SEPARATE SEAT(FROM OCT-66)	1		411 LUT	
	113	74902-18723	CARPET-FRONT FLOOR GREEN FOR SEPARATE SEAT(FROM OCT-66)	1		411 LUT	
	114	74907-24101	CARPET-REAR FLOOR GREEN FOR SEPARATE SEAT(FROM OCT-66)	1		411 LUT	
	115	74902-18724	CARPET-FRONT FLOOR BLACK FOR SEPARATE SEAT(FROM OCT-66)	1	1	411 LUT	
	116	74907-15800	CARPET-REAR FLOOR BLACK FOR SEPARATE SEAT(FROM OCT-66)	1		411 LUT	
	117	74902-18730	CARPET-FRONT FOR SEPARATE SEAT(FROM C/# PL411-200377)	1	1	411 LUT	
	118	74907-17900	CARPET-REAR FOR SEPARATE SEAT(FROM C/# PL411-200377)	1		411 LUT	
	119	74902-18731	CARPET-FRONT FOR SEPARATE SEAT(FROM C/# PL411-200377	1	1	411 LUT	
	120	74907-17901	CARPET-REAR FOR SEPARATE SEAT(FROM C/# PL411-200377)	1		411 LUT	
	121	74902-18732	CARPET-FRONT FOR SEPARATE SEAT(FROM C/# PL411-200377	1	1	411 LUT	
	122	74907-17902	CARPET-REAR FOR SEPARATE SEAT(FROM C/# PL411-200377)	1	1	411 LUT	
	123	74902-18733	CARPET-FRONT FOR SEPARATE SEAT(FROM C/# PL411-200377	1	1	411 LUT	

Printed in Japan

REVISED: SEPTEMBER,1968

S	KEY NO.	PART NO.	PART NAME	Q'TY	SALES UNIT	MODEL	ICA
	124	74907-24400	CARPET-REAR FOR SEPARATE SEAT(FROM C/# PL411-200377)	1	1	411 LUT	
	125	74902-18734	CARPET-FRONT FOR SEPARATE SEAT(FROM C/# PL411-200377	1		411 LUT	
	126	74907-15801	CARPET-REAR FOR SEPARATE SEAT(FROM C/# PL411-200377)	1	1	411 LUT	
	127	74902-24500	MAT-FRONT FLOOR VINYL(FROM OCT-66)	1		411 RL-UAK ,WRL-UAK	
	128	74907-24300	MAT-REAR FLOOR VINYL(FROM OCT-66)	1		411 RL-UAK ,WRL-UAK	
	129	74902-24501	CARPET-FRONT FLOOR RED (TO C/# RL411-010236)	1		411 RL-UAK ,WRL-UAK	
	130	74907-16604	CARPET-REAR FLOOR RED(TO C/# RL411-010236)	1		411 RL-UAK ,WRL-UAK	
	131	74902-24502	CARPET-FRONT FLOOR BLACK(TO C/# RL411-010236)	1	1	411 RL-UAK ,WRL-UAK	
	132	74907-15800	CARPET-REAR FLOOR BLACK(TO C/# RL411-010236)	1		411 RL-UAK ,WRL-UAK	
	133	74902-24503	CARPET-FRONT RED(FROM C/# RL411-010237)	1	1	411 RL-UAK ,WRL-UAK	
	134	74907-17900	CARPET-REAR RED(FROM C/# RL411-010237)	1		411 RL-UAK ,WRL-UAK	
	135	74902-24504	CARPET-FRONT BLACK(FROM C/# RL411-010237)	1		411 RL-UAK ,WRL-UAK	
	136	74907-15801	CARPET-REAR BLACK(FROM C/# RL411-010237)	1	1	411 RL-UAK ,WRL-UAK	
	137	74902-18703	MAT-FRONT FLOOR VINYL(FROM OCT-66)	1		411 RL-UTK ,WRL-UTK	
	138	74907-24300	MAT-REAR FLOOR VINYL(FROM OCT-66)	1		411 RL-UTK ,WRL-UTK	
	139	74902-18720	CARPET-FRONT FLOOR RED (TO C/# RL411-010236)	1		411 RL-UTK ,WRL-UTK	

REVISED: SEPTEMBER,1968

Printed in Japan

S	KEY NO.	PART NO.	PART NAME	Q'TY	SALES UNIT	MODEL	ICA
	140	74907-16604	CARPET-REAR FLOOR RED(TO C/# RL411-010236)	1		411 RL-UTK ,WRL-UTK	
	141	74902-18724	CARPET-FRONT FLOOR BLA CK(TO C/# RL411-010236)	1	1	411 RL-UTK ,WRL-UTK	
	142	74907-15800	CARPET-REAR FLOOR BLAC K(TO C/# RL411-010236)	1		411 RL-UTK ,WRL-UTK	
	143	74902-18730	CARPET-FRONT FOR SEPAR ATE SEAT(FROM C/# PL41 1-200377	1	1	411 LUT	
	144	74907-17900	CARPET-REAR FOR SEPARA TE SEAT(FROM C/# PL411 -200377)	1		411 LUT	
	145	74902-18731	CARPET-FRONT FOR SEPAR ATE SEAT(FROM C/# PL41 1-200377	1	1	411 LUT	
	146	74907-17901	CARPET-REAR FOR SEPARA TE SEAT(FROM C/# PL411 -200377)	1		411 LUT	
	147	74902-18732	CARPET-FRONT FOR SEPAR ATE SEAT(FROM C/# PL41 1-200377	1	1	411 LUT	
	148	74907-17902	CARPET-REAR FOR SEPARA TE SEAT(FROM C/# PL411 -200377)	1	1	411 LUT	
	149	74902-18733	CARPET-FRONT FOR SEPAR ATE SEAT(FROM C/# PL41 1-200377	1	1	411 LUT	
	150	74907-24400	CARPET-REAR FOR SEPARA TE SEAT(FROM C/# PL411 -200377)	1	1	411 LUT	
	151	74902-18734	CARPET-FRONT FOR SEPAR ATE SEAT(FROM C/# PL41 1-200377	1		411 LUT	
	152	74907-15801	CARPET-REAR FOR SEPARA TE SEAT(FROM C/# PL411 -200377)	1	1	411 LUT	
	153	74910-16500	INSULATOR-FLOOR FRONT(R.H.)(FROM OCT-66)	1	1	411	

Printed in Japan

REVISED: SEPTEMBER,1968

S	KEY NO.	PART NO.	PART NAME	Q'TY	SALES UNIT	MODEL	ICA
	154	74911-16500	INSULATOR-FLOOR FRONT(L.H.)(FROM OCT-66)	1	1	411	
	155	74912-16500	INSULATOR-FLOOR FRONT CENTER(FROM OCT-66)	1	1	411(COLUMN SHIFT)	
	156	74913-10600	INSULATOR-FLOOR REAR(R .H.)(FROM OCT-66)	1	1	411	
	157	74914-10600	INSULATOR-FLOOR REAR(L .H.)(FROM OCT-66)	1	1	411	
	158	74915-16500	INSULATOR-FLOOR REAR C ENTER(FROM OCT-66)	1	1	411(COLUMN SHIFT)	
	159	74915-15800	INSULATOR-FLOOR REAR C ENTER(FROM OCT-66)	1	1	411(FLOOR SHIFT)	
	160	74942-10900	PLUG-20(FROM OCT-66)	1		411	
	161	64821-32200	PLUG-LOCATION HOLE 10(FROM OCT-66)	4	50	411	
	162	74942-04100	PLUG-RUBBER 25(FROM OC T-66)	8		411	
	163	86350-00100	PLUG-DRAIN HOLE(FROM O CT-66)	2	5	411	
	164	74939-12400	PLUG-REVERSE LAMP SWIT CH SETTING(FROM OCT-66)	1	1	4 SPEED 41 1	
	165	74962-15800	COVER-TRANSMISSION HOL E(FROM OCT-66)	1		4 SPEED 41 1	
	166	74963-15800	BOOT-RUBBER,CONTROL LE VER(FROM OCT-66)	1	5	4 SPEED 41 1	
	167	00540-60710	SCREW-TAPPING(FROM OCT -66)	5		4 SPEED 41 1	
	168	74920-16601	INSULATOR-FLOOR FRONT(R.H.)(FROM OCT-66)	1	1	411(COLUMN SHIFT)	
	169	74920-16901	INSULATOR-FLOOR FRONT(R.H.)(FROM OCT-66)	1	1	411(FLOOR SHIFT)	
	170	74921-16601	INSULATOR-FLOOR FRONT(L.H.)(FROM OCT-66)	1	1	411(COLUMN SHIFT)	

REVISED: SEPTEMBER,1968

Printed in Japan

S	KEY NO.	PART NO.	PART NAME	Q'TY	SALES UNIT	MODEL	ICA
	171	74921-16901	INSULATOR-FLOOR FRONT(L.H.)(FROM OCT-66)	1		411(FLOOR SHIFT)	
	172	74922-16601	INSULATOR-FLOOR CENTER (FROM OCT-66)	1	1	411(COLUMN SHIFT)	
	173	74922-15801	INSULATOR-FLOOR FRONT CENTER(FROM OCT-66)	1	1	411(FLOOR SHIFT)	
	174	74923-16500	INSULATOR-FLOOR REAR(R.H.)(FROM OCT-66)	1	1	411	
	175	74924-16500	INSULATOR-FLOOR REAR(L.H.)(FROM OCT-66)	1	1	411	
	176	74925-16600	INSULATOR-FLOOR REAR SEAT(R.H.)(FROM OCT-66)	1		411	
	177	74926-16600	INSULATOR-FLOOR REAR SEAT(L.H.)(FROM OCT-66)	1		411	
	178	74950-24000	LEATHER-FLOOR SIDE FRONT R.H.(RED)(FROM OCT.-'66)	1	1	411(EXC.U.S.A.)	
	179	74950-24001	LEATHER-FLOOR SIDE FRONT R.H.(BLUE)(FROM OCT.-'66)	1	1	411(EXC.U.S.A.)	
	180	74950-24002	LEATHER-FLOOR SIDE FRONT R.H.(BROWN)(FROM OCT.-'66)	1	1	411(EXC.U.S.A.)	
	181	74950-24003	LEATHER-FLOOR SIDE FRONT R.H.(GREEN)(FROM OCT.-'66)	1	1	411(EXC.U.S.A.)	
	182	74950-15800	LEATHER-FLOOR SIDE FRONT R.H.(RICH BLACK)(FROM OCT.-'66)	1	1	411(U.S.A.)	
	183	74950-13900	LEATHER-FLOOR SIDE FRONT R.H.(RICH RED)(FROM OCT.-'66)	1	1	411(U.S.A.)	
	184	74951-24000	LEATHER-FLOOR SIDE FRONT L.H.(RED)(FROM OCT.-'66)	1	1	411	
	185	74951-24001	LEATHER-FLOOR SIDE FRONT L.H.(BLUE)(FROM OCT.-'66)	1	1	411	

Printed in Japan

REVISED: SEPTEMBER,1968

S	KEY NO.	PART NO.	PART NAME	Q'TY	SALES UNIT	MODEL	ICA
	186	74951-24002	LEATHER-FLOOR SIDE FRONT L.H.(BROWN)(FROM OCT.-'66)	1	1	411	
	187	74951-24003	LEATHER-FLOOR SIDE FRONT L.H.(GREEN)(FROM OCT.-'66)	1	1	411	
	188	74951-13900	LEATHER-FLOOR SIDE FRONT L.H.(RICH BLACK)(FROM OCT.-'66)	1	1	411(U.S.A.)	
	189	74951-15800	LEATHER-FLOOR SIDE FRONT L.H.(RICH RED)(FROM OCT.-'66)	1	5	411(U.S.A.)	
	190	74952-24000	LEATHER-FLOOR SIDE REAR R.H.(RED)(FROM OCT.-'66)	1	1	411	
	191	74952-24001	LEATHER-FLOOR SIDE REAR R.H.(BLUE)(FROM OCT.-'66)	1	1	411	
	192	74952-24002	LEATHER-FLOOR SIDE REAR R.H.(BROWN)(FROM OCT.-'66)	1	1	411	
	193	74952-24003	LEATHER-FLOOR SIDE REAR R.H.(GREEN)(FROM OCT.-'66)	1	1	411	
	194	74952-13900	LEATHER-FLOOR SIDE REAR R.H.(RICH BLACK)(FROM OCT.-'66)	1	1	411(U.S.A.)	
	195	74952-15800	LEATHER-FLOOR SIDE REAR R.H.(RICH RED)(FROM OCT.-'66)	1	5	411(EXC.U.S.A.)	
	196	74953-24000	LEATHER-FLOOR SIDE REAR L.H.(RED)(FROM OCT.-'66)	1	1	411(EXC.U.S.A.)	
	197	74953-24001	LEATHER-FLOOR SIDE FRONT L.H.(BLUE)(FROM OCT.-'66)	1	1	411(EXC.U.S.A.)	
	198	74953-24002	LEATHER-FLOOR SIDE REAR L.H.(BROWN)(FROM OCT.-'66)	1	1	411(EXC.U.S.A.)	

REVISED: SEPTEMBER,1968

Printed in Japan

S	KEY NO.	PART NO.	PART NAME	QTY	SALES UNIT	MODEL	ICA
	199	74953-24003	LEATHER-FLOOR SIDE REA R L.H.(GREEN)(FROM OCT .-'66)	1	1	411(EXC.U. S.A.)	
	200	74953-13900	LEATHER-FLOOR SIDE REA R L.H.(RICH BLACK)(FRO M OCT.-'66)	1	1	411(U.S.A.)	
	201	74953-15800	LEATHER-FLOOR SIDE REA R L.H.(RICH RED)(FROM OCT.-'66)	1	1	411(U.S.A.)	
	202	74954-24000	LEATHER-FRONT SEAT SID E R.H.(RED)(FROM OCT.- '66)	1	1	411(EXC.U. S.A.)	
	203	74954-24001	LEATHER-FRONT SEAT SID E R.H.(BLUE)(FROM OCT. -'66)	1	1	411(EXC.U. S.A.)	
	204	74954-24002	LEATHER-FRONT SEAT SID E R.H.(BROWN)(FROM OCT .-'66)	1	1	411(EXC.U. S.A.)	
	205	74954-24003	LEATHER-FRONT SEAT SID E R.H.(GREEN)(FROM OCT .-'66)	1	1	411(EXC.U. S.A.)	
	206	74954-13900	LEATHER-FRONT SEAT SID E R.H.(RICH BLACK)(FRO M OCT.-'66)	1	1	411(U.S.A.)	
	207	74954-15800	LEATHER-FRONT SEAT SID E R.H.(RICH RED)(FROM OCT.-'66)	1	1	411(U.S.A.)	
	208	74955-24000	LEATHER-FRONT SEAT SID E L.H.(RED)(FROM OCT.- '66)	1	1	411(EXC.U. S.A.)	
	209	74955-24001	LEATHER-FRONT SEAT SID E L.H.(BLUE)(FROM OCT. -'66)	1	1	411(EXC.U. S.A.)	
	210	74955-24002	LEATHER-FRONT SEAT SID E L.H.(BROWN)(FROM OCT .-'66)	1	1	411(EXC.U. S.A.)	
	211	74955-24003	LEATHER-FRONT SEAT SID E L.H.(GREEN)(FROM OCT .-'66)	1	1	411(EXC.U. S.A.)	

Printed in Japan

REVISED: SEPTEMBER,1968

S	KEY NO.	PART NO.	PART NAME	Q'TY	SALES UNIT	MODEL	ICA
	212	74955-13900	LEATHER-FRONT SEAT SIDE L.H.(RICH BLACK)(FROM OCT.-'66)	1	1	411(U.S.A.)	
	213	74955-15800	LEATHER-FRONT SEAT SIDE L.H.(RICH RED)(FROM OCT.-'66)	1	1	411(U.S.A.)	
	214	74958-24000	LEATHER-REAR SEAT LOWER(RED)(FROM OCT.-'66)	1	1	411(EXC.U.S.A.)	
	215	74958-24001	LEATHER-REAR SEAT LOWER(BLUE)(FROM OCT.-'66)	1	1	411(EXC.U.S.A.)	
	216	74958-24002	LEATHER-REAR SEAT LOWER(BROWN)(FROM OCT.-'66)	1	1	411(EXC.U.S.A.)	
	217	74958-24003	LEATHER-REAR SEAT LOWER(GREEN)(FROM OCT.-'66)	1	1	411(EXC.U.S.A.)	
	218	74958-13900	LEATHER-REAR SEAT LOWER(RICH BLACK)(FROM OCT.-'66)	1	1	411(U.S.A.)	
	219	74958-15800	LEATHER-REAR SEAT LOWER(RICH RED)(FROM OCT.-'66)	1	1	411(U.S.A.)	

Printed in Japan

REVISED: SEPTEMBER,1968

NOTE

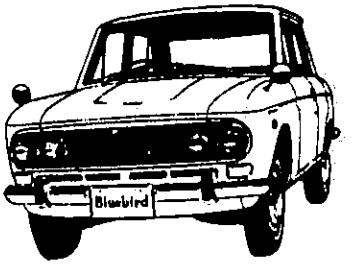

NOTE

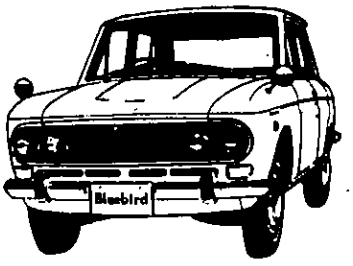

FRONT DOOR PANEL

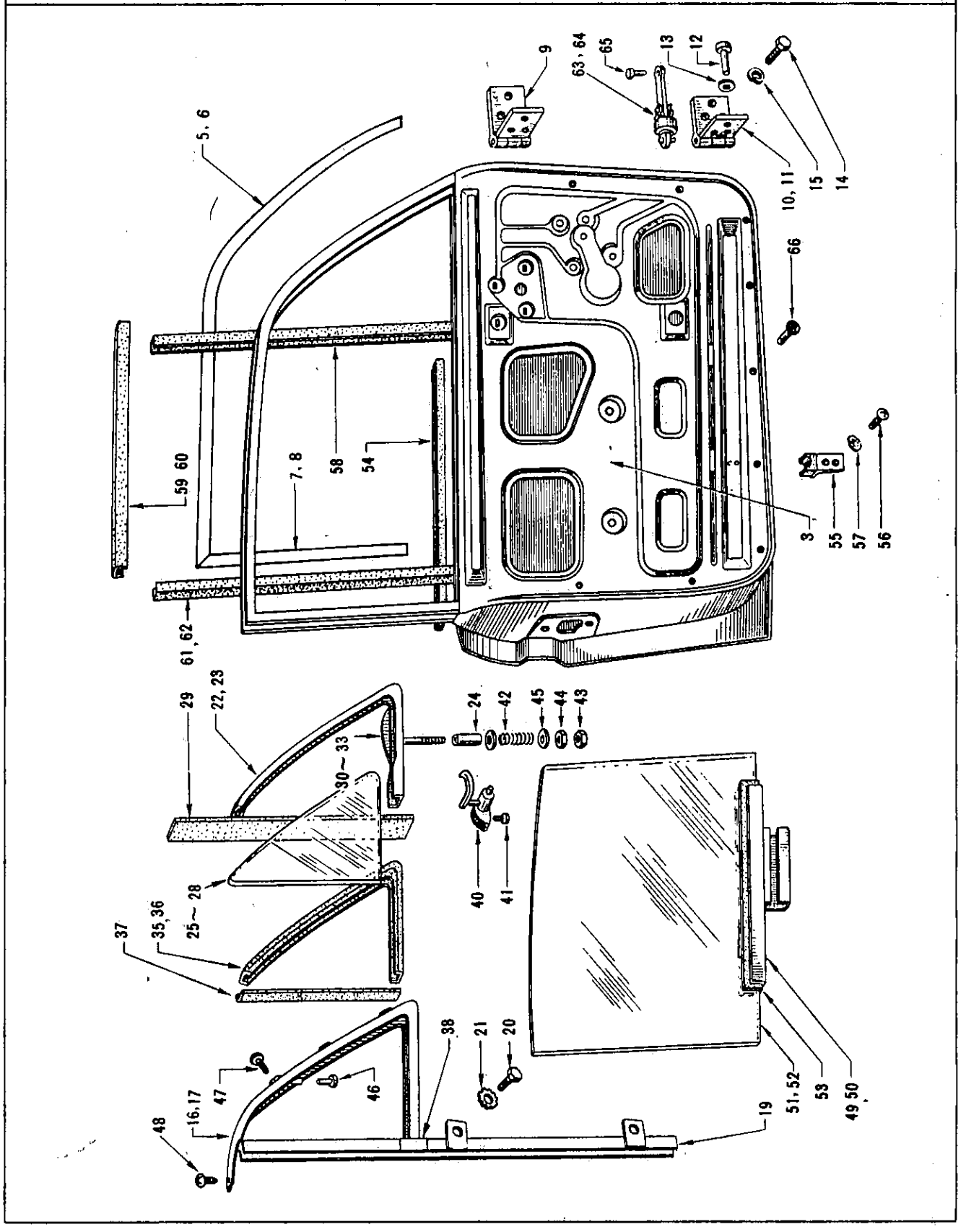

S	KEY NO.	PART NO.	PART NAME	Q'TY	SALES UNIT	MODEL	ICA
			FRONT DOOR PANEL				
	1	80100-10631	ASSY-PANEL,FRONT DOOR(R.H.)	1		411	
	2	80212-11400	SET-MOULDING,SASH,FRON T DOOR(R.H.)	1	1	411 UTK,1. 6L WAGON & B,C TYPE	
	3	80101-10631	ASSY-PANEL,FRONT DOOR(L.H.)	1		411	
	4	80213-11400	SET-MOULDING,SASH,FRON T DOOR(L.H.)	1	1	411 UTK,1. 6L WAGON & B,C TYPE	
	5	80212-18500	MOULDING-SASH,FRONT DOOR,MAIN RH	1	1	411 SEDAN (B & C TYP E)	
	6	80213-18500	MOULDING-SASH,FRONT DOOR,MAIN LH	1	1	411 WAGON (A & B TYP E)	
	7	80214-18500	MOULDING-SASH,FRONT DOOR,REAR RH	1	1	411 SEDAN (B & C TYP E)	
	8	80215-18500	MOULDING-SASH,FRONT DOOR REAR LH	1	10	411 WAGON (A & B TYP E)	
	9	80400-10600	ASSY-HINGE,FRONT DOOR, UPPER)	2		411	
	10	80402-10600	ASSY-HINGE,FRONT DOOR, LOWER	2	1	411	
	11	80403-10600	ASSY-HINGE,FRONT DOOR, LOWER	2	1	411	Y
	12	00620-81600	RIVET TO FIX HINGE	12	50	411	
	13	00915-51500	WASHER-PLAIN TO FIX HI NGE	12	50	411	

Printed in Japan

REVISED: SEPTEMBER,1968

S	KEY NO.	PART NO.	PART NAME	Q'TY	SALES UNIT	MODEL	ICA
	14	00114-51610	BOLT TO FIX HINGE TO FRONT PILLAR	12		411	
	15	00915-11510	WASHER-LOCK TO FIX HINGE TO FRONT PILLAR	12		411	
	16	80270-10601	ASSY-FRAME,VENTILATOR(R.H.)	1		411	
	17	80271-10601	ASSY-FRAME,VENTILATOR(L.H.)	1		411	
	18	80220-10601	SASH-CENTER,FRONT DOOR(R.H.)	1	1	411	
	19	80221-10601	SASH-CENTER,FRONT DOOR(L.H.)	1	1	411	
	20	00114-41010	BOLT TO FIX SASH CENTER	4		411	
	21	00916-31410	WASHER-LOCK TO FIX SASH CENTER	4	50	411	
	22	80250-10601	ASSY-CHANNEL,VENTILATOR GLASS(R.H.)	1		411	
	23	80251-10601	ASSY-CHANNEL,VENTILATOR GLASS(L.H.)	1	1	411	
	24	80263-10600	TUBE-DISTANCE,BOTTOM PIVOT	2	10	411	
	25	80255-10601	GLASS-DOOR VENTILATOR(TOUGHENED)	2		411 P,P-P,N	
*	26	80255-11401	GLASS-DOOR VENTILATOR(TOUGHENED,ANTI-SUN)	2		411 UTK,1.6L & R DRIVE WAGON	
*	27	80255-10802	GLASS-DOOR VENTILATOR(SPECIALLY TOUGHENED)	2		411	
*	28	80255-10803	GLASS-DOOR VENTILATOR(SPECIALLY TOUGHENED,ANTI-SUN)	2		411	
	29	80285-10600	RUBBER-GLAZING,VENTILATOR	2	1	411	
	30	80256-10600	DRAIN-CHANNEL,VENTILATOR(R.H.)	1		411	

Printed in Japan

REVISED: SEPTEMBER,1968

S	KEY NO.	PART NO.	PART NAME	Q'TY	SALES UNIT	MODEL	ICA
	31	80256-24000	DRAIN-CHANNEL,VENTILATOR(R.H.)	1	1	411	Y
	32	80257-10600	DRAIN-CHANNEL,VENTILATOR(L.H.)	1		411	
	33	80257-24000	DRAIN-CHANNEL,VENTILATOR(L.H.)	1	1	411	Y
	34	80241-10601	WEATHERSTRIP-VENTILATOR,FRONT(R.H.)	1		411	
	35	80242-10601	WEATHERSTRIP-VENTILATOR,FRONT(L.H.)	1		411	
	36	80243-10600	WEATHERSTRIP-VENTILATOR,REAR(R.H.)	1		411	
	37	80244-10600	WEATHERSTRIP-VENTILATOR,REAR(L.H.)	1	5	411	
	38	80233-10600	COVER-SASH,CENTER	2	5	411	
*	39	80206-10600	ASSY-HANDLE,CATCH,VENTILATOR(R.H.)	1	1	411	
*	40	80207-10600	ASSY-HANDLE,CATCH,VENTILATOR(L.H.)	1		411	
	41	80295-10600	RIVET(TO FIX CATCH HANDLE)	4	5	411	
	42	80247-32200	SPRING-DOOR VENTILATOR	2	10	411	
	43	00911-34410	NUT-LOCK	2		411	
	44	00911-14410	NUT	2		411	
	45	00915-41410	WASHER-PLAIN	4		411	
	46	00660-40620	RIVET(TO FIX PIVOT TOP & LOWER BRACKET)	2	50	411	
	47	00513-80720	SCREW	6	50	411	
	48	00310-80620	SCREW	4	50	411	
	49	80302-10600	ASSY-CHANNEL,BOTTOM,FRONT DOOR GLASS(R.H.)	1	1	411	
	50	80303-10600	ASSY-CHANNEL,BOTTOM,FRONT DOOR GLASS(L.H.)	1	1	411	

Printed in Japan
REVISED: SEPTEMBER,1968

S	KEY NO.	PART NO.	PART NAME	QTY	SALES UNIT	MODEL	ICA
*	51	80308-10800	GLASS-WINDOW,FRONT DOOR(TOUGHENED)	2		411	
*	52	80308-10801	GLASS-WINDOW,FRONT DOOR(TOUGHENED,ANTI-SUN)	2		411	
	53	80312-10600	RUBBER-GLAZING,FRONT DOOR WINDOW	2	5	411	
*	54	80320-10601	ASSY-WEATHERSTRIP,FRONT DOOR WINDOW	2	2	411	
	55	80315-10650	ASSY-SUPPORT & CUSHION ,DOOR WINDOW	2	1	411	
	56	00314-01220	SCREW TO FIX SUPPORT	4	50	411	
	57	00915-11010	WASHER-LOCK TO FIX SUPPORT	4	100	411	
	58	80335-10600	RUBBER-GLASS RUN(A)	2	1	411	
	59	80336-10600	RUBBER-GLASS RUN(B)	2	5	411	
*	60	80336-16500	RUBBER-GLASS RUN(B)	2		411	Y
*	61	80337-10600	RUBBER-GLASS RUN(C)	2	10	411	
	62	82335-16500	RUBBER-GLASS RUN(C)	2	5	411	Y
*	63	80410-10600	ASSY-LINK,CHECK,DOOR	2	1	411	
	64	80410-16500	ASSY-LINK,CHECK,DOOR	2	10	411	Y
	65	00660-51010	RIVET(TO FIX CHECK LINK)	2	50	411	
	66	80929-32200	CAP-DOOR FINISH CLIP	18	1	411	
	67	80995-10600	RUBBER-DUST SEAL	4	50	411	

Printed in Japan

REVISED: SEPTEMBER,1968

NOTE

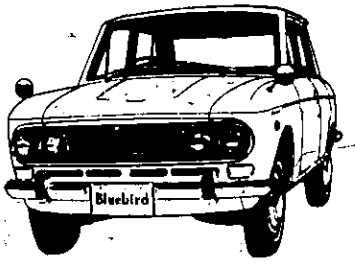

FRONT DOOR TRIMMING

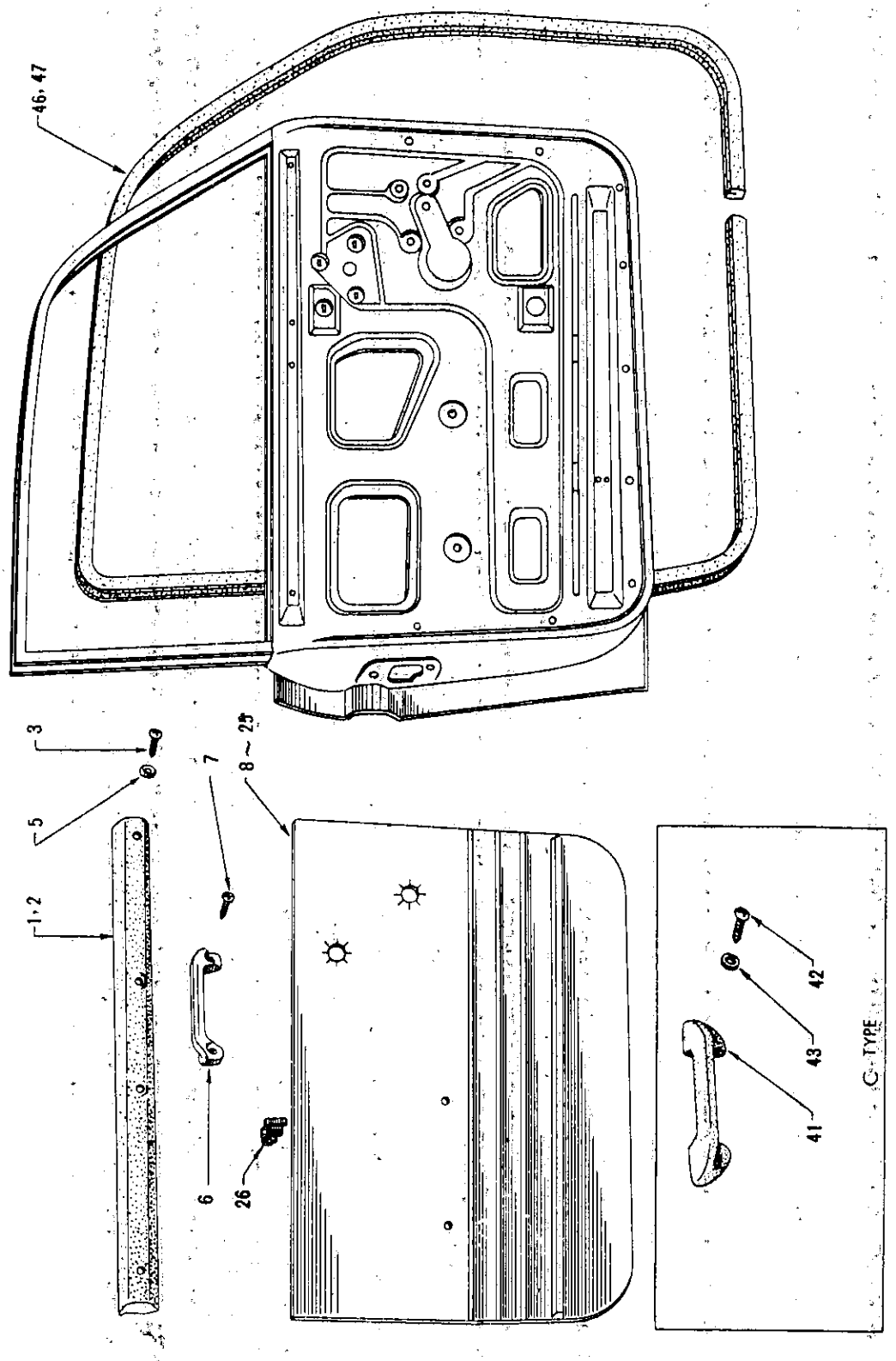

S	KEY NO.	PART NO.	PART NAME	Q'TY	SALES UNIT	MODEL	ICA
			FRONT DOOR TRIMMING				
	1	80948-11401	ASSY-MOULDING,GARNISH, INSIDE(R.H.)	1		411	
	2	80949-11401	ASSY-MOULDING,GARNISH, INSIDE(L.H.)	1		411	
	3	00530-60710	SCREW	4		SEDAN 411	
	4	80995-10600	SEAL-DUST,RUBBER	4	50	411	
	5	80999-11100	WASHER-TRIM	4	50	SEDAN 411	
	6	80691-26261	HANDLE-PULL	2	2	A,B TYPE 411	
	7	00314-01620	SCREW	4	50	A,B TYPE 411	
	8	80900-13604	ASSY-FINISH,FRONT DOOR (R.H.) GRAY(#720),RED BROWN(#721)	1	1	411 UTK	
	9	80901-13604	ASSY-FINISH,FRONT DOOR (L.H.)GRAY(#720),RED BROWN(#721)	1		411 UTK	
	10	80900-13900	ASSY-FINISH,FRONT DOOR (R.H.)RICH BLACK	1	1	411 U.S.A.	
	11	80901-13900	ASSY-FINISH,FRONT DOOR (L.H.)RICH BLACK	1	1	411 U.S.A.	
	12	80900-17000	ASSY-FINISH,FRONT DOOR (R.H.)RICH RED	1	1	411 U.S.A.	
	13	80901-17000	ASSY-FINISH,FRONT DOOR (L.H.)RICH RED	1	1	411 U.S.A.	
	14	80900-19100	ASSY-FINISH,FRONT DOOR (R.H.)RED(FROM OCT.-'66)	1	1	411(EXC.U.S.A.)	
	15	80901-19100	ASSY-FINISH,FRONT DOOR (L.H.)RED(FROM OCT.-'66)	1	1	411(EXC.U.S.A.)	

Printed in Japan

REVISED: SEPTEMBER,1968

S	KEY NO.	PART NO.	PART NAME	QTY	SALES UNIT	MODEL	ICA
	16	80900-19101	ASSY-FINISH,FRONT DOOR (R.H.)BLUE(FROM OCT.-'66)	1	1	411(EXC.U.S.A.)	
	17	80901-19101	ASSY-FINISH,FRONT DOOR (L.H.)BLUE(FROM OCT.-'66)	1	1	411(EXC.U.S.A.)	
	18	80900-19102	ASSY-FINISH,FRONT DOOR (R.H.)BROWN(FROM OCT.-'66)	1	1	411(EXC.U.S.A.)	
	19	80901-19102	ASSY-FINISH,FRONT DOOR (L.H.)BROWN(FROM OCT.-'66)	1	1	411(EXC.U.S.A.)	
	20	80900-19103	ASSY-FINISH,FRONT DOOR (R.H.)GREEN(FROM OCT.-'66)	1		411(EXC.U.S.A.)	
	21	80901-19103	ASSY-FINISH,FRONT DOOR (L.H.)GREEN(FROM OCT.-'66)	1		411(EXC.U.S.A.)	
	22	80900-18701	ASSY-FINISH,FRONT DOOR (R.H.)RICH BLACK(FROM OCT.-'66)	1	1	411(U.S.A.)	
	23	80901-18701	ASSY-FINISH,FRONT DOOR (L.H.)RICH BLACK(FROM OCT.-'66)	1	1	411(U.S.A.)	
	24	80900-18700	ASSY-FINISH,FRONT DOOR (R.H.)RICH RED(FROM OCT.-'66)	1	1	411(U.S.A.)	
	25	80901-18700	ASSY-FINISH,FRONT DOOR (L.H.)RICH RED(FROM OCT.-'66)	1	1	411(U.S.A.)	
	26	80919-32200	CLIP-TRIM PAD	18	10	411	
	27	80900-11604	ASSY-FINISH,FRONT DOOR (R.H.)RED(#380),YELLOW (#386)	1		A,B TYPE 411	
	28	80901-11604	ASSY-FINISH,FRONT DOOR (L.H.)RED(#380),YELLOW (#386)	1	10	A,B TYPE 411	
	29	80900-13605	ASSY-FINISH FRONT DOOR (R.H.)BLUE(#722,#723)	1	1	411 UTK	

REVISED: SEPTEMBER,1968

Printed in Japan

S	KEY NO.	PART NO.	PART NAME	Q'TY	SALES UNIT	MODEL	ICA
	30	80901-13605	ASSY-FINISH FRONT DOOR (L.H.)BLUE(#722,#723)	1	1	411 UTK	
	31	80900-13606	ASSY-FINISH FRONT DOOR (R.H.)GRAY(#720)BROWN(#725)	1	1	411 UTK	
	32	80901-13606	ASSY-FINISH FRONT DOOR (L.H.)GRAY(#720)BROWN(#725)	1	1	411 UTK	
	33	80900-11407	ASSY-FINISH FRONT DOOR (R.H.)GREEN(#384 #385)	1		411 UTK	
	34	80901-11407	ASSY-FINISH FRONT DOOR (L.H.)GREEN(#384 #385)	1		411 UTK	
	35	80900-11605	ASSY-FINISH FRONT DOOR (R.H.)BLUE(#382 #383)	1		A,B,TYPE 411	
	36	80901-11605	ASSY-FINISH FRONT DOOR (L.H.)BLUE(#382 #383)	1	10	A,B,TYPE 411	
	37	80900-11606	ASSY-FINISH FRONT DOOR (R.H.)BROWN(#387)YELLOW(#386)	1		A,B,TYPE 411	
	38	80901-11606	ASSY-FINISH FRONT DOOR (L.H.)BROWN(#387)YELLOW(#386)	1	1	A,B,TYPE 411	
	39	80900-11607	ASSY-FINISH FRONT DOOR (R.H.)GREEN(#384 #385)	1		A,B,TYPE 411	
	40	80901-11607	ASSY-FINISH FRONT DOOR (L.H.)GREEN(#384 #385)	1		A,B,TYPE 411	
*	41	80940-11400	COMP.-ARM REST(BLACK)	2	4	C TYPE 411	
	42	00414-43010	SCREW TO FIX ARM REST	4	50	C TYPE 411	
	43	00915-11410	WASHER-LOCK TO FIX ARM REST	4		C TYPE 411	
*	44	76800-10604	ASSY-WEATHERSTRIP,FRONT DOOR(R.H.)	1	1	411	
	45	76800-24000	ASSY-WEATHERSTRIP,FRONT DOOR(R.H.)	1	1	411	
*	46	76801-10604	ASSY-WEATHERSTRIP,FRONT DOOR(L.H.)	1	1	411	

REVISED: SEPTEMBER,1968

Printed in Japan

FIG. **297** NISSAN MOTOR CO., LTD.

S	KEY NO.	PART NO.	PART NAME	Q'TY	SALES UNIT	MODEL	ICA
	47	76801-24000	ASSY-WEATHERSTRIP,FRONT DOOR(L.H.)	1	1	411	Y

Printed in Japan

REVISED: SEPTEMBER,1968

NOTE

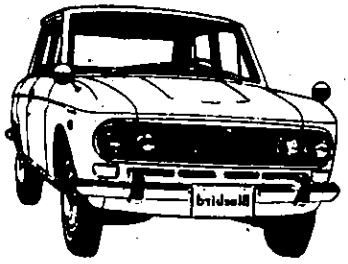

FRONT DOOR LOCK & REGULATOR

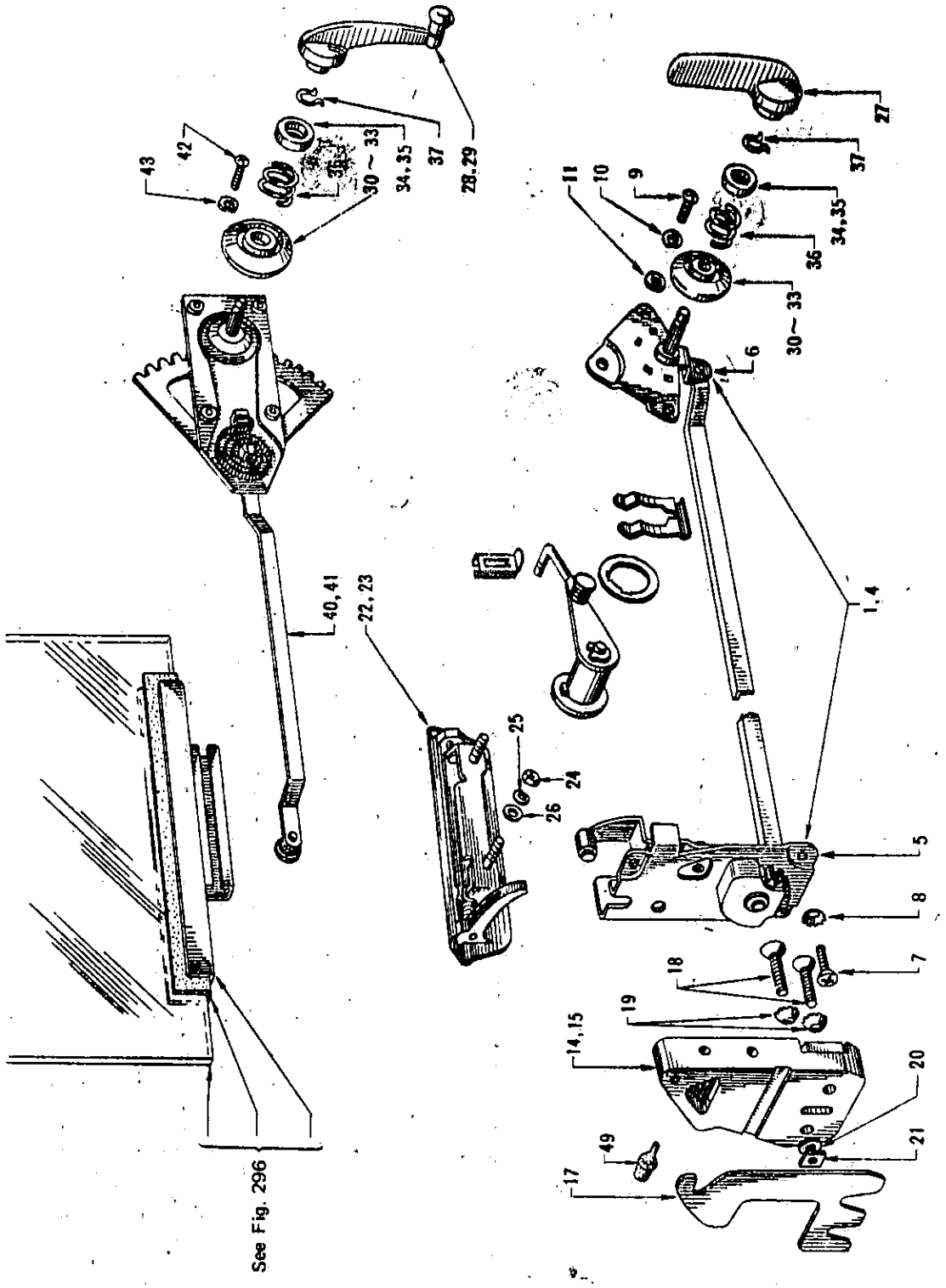

S	KEY NO.	PART NO.	PART NAME	QTY	SALES UNIT	MODEL	ICA
			FRONT DOOR LOCK & REGULATOR				
*	1	80500-10601	ASSY-LOCK & REMOTE CONTROL,FRONT DOOR(R.H.)	1	1	411	
	2	80502-10602	ASSY-LOCK,FRONT DOOR(R.H.)	1	1	411	
	3	80504-10601	ASSY-REMOTE CONTROL(R.H.)	1	1	411	
*	4	80501-10601	ASSY-LOCK & REMOTE CONTROL,FRONT DOOR(L.H.)	1	1	411	
	5	80503-10602	ASSY-LOCK,FRONT DOOR(L.H.)	1	1	411	
	6	80505-10601	ASSY-REMOTE CONTROL(L.H.)	1	1	411	
	7	00324-00810	SCREW TO FIX LOCK TO DOOR	6	50	411	
	8	00916-41010	WASHER-LOCK TO FIX LOCK TO DOOR	6		411	
	9	00314-00810	SCREW TO FIX REMOTE CONTROL TO DOOR	6	50	411	
	10	00915-11010	WASHER-LOCK TO FIX REMOTE CONTROL TO DOOR	6	100	411	
	11	00915-41010	WASHER-PLAIN TO FIX REMOTE CONTROL TO DOOR	6		411	
	12	80570-10602	ASSY-STRIKER,DOOR LOCK(R.H.)	1	1	411	
	13	80570-10901	ASSY-STRIKER,DOOR LOCK(R.H.)	1	1	WAGON 411	Y
	14	80571-10602	ASSY-STRIKER,DOOR LOCK(L.H.)	1	1	411	
	15	80571-10901	ASSY-STRIKER,DOOR LOCK(L.H.)	1	1	WAGON 411	Y
	16	80585-35000	BUMPER-RUBBER	2	1	411	

Printed in Japan

REVISED: SEPTEMBER,1968

S	KEY NO.	PART NO.	PART NAME	Q'TY	SALES UNIT	MODEL	ICA
	17	80630-10601	SHIM-ADJUSTING,DOOR LOCK STRIKER	AR	5	411	
	18	00324-43010	SCREW TO FIX STRIKER TO PILLAR	4	50	411	
	19	00916-41410	WASHER-LOCK TO FIX STRIKER TO PILLAR	4		411	
	20	00915-51410	WASHER-PLAIN TO FIX STRIKER TO PILLAR	2		411	
	21	80631-10600	NUT TO FIX STRIKER TO PILLAR	2		411	
	22	80605-10602	ASSY-HANDLE,DOOR OUTSIDE,FRONT(R.H.)	1		411	
	23	80606-10602	ASSY-HANDLE,DOOR OUTSIDE,FRONT(L.H.)	1	1	411	
	24	00911-14010	NUT TO FIX HANDLE	4		411	
	25	00915-11010	WASHER-LOCK TO FIX HANDLE	4	100	411	
	26	00915-41010	WASHER-PLAIN TO FIX HANDLE	4		411	
	27	80672-32200	HANDLE-DOOR,INSIDE	2	2	411	
	28	80760-10600	ASSY-HANDLE,DOOR WINDOW REGULATOR(TO MAR-66)	2	2	411	
	29	80760-73000	ASSY-HANDLE,DOOR WINDOW REGULATOR(FROM APR.-'66)	2	1	411	N
	30	80675-10600	ESCUTCHEON-DOOR HANDLE (TO MAR-66)	4	2	411	
	31	80675-18400	ESCUTCHEON-INSIDE HANDLE(FROM APR.-'66)	2	5	411	N
	32	80675-10600	ESCUTCHEON-INSIDE HANDLE(TO MAR-66)	2	2	411	
	33	80761-18400	ESCUTCHEON-REGULATOR HANDLE(FROM APR.-'66)	2	5	411	N
	34	80676-10400	CROWN-ESCUTCHEON(TO MAR-66)	4	2	411	

Printed in Japan

REVISED: SEPTEMBER,1968

S	KEY NO.	PART NO.	PART NAME	Q'TY	SALES UNIT	MODEL	ICA
	35	80676-10400	CROWN-ESCUTCHEON(FROM APR.-'66)	2	2	411	Y
	36	80674-10601	SPRING-ESCUTCHEON(UP TO MAR.-'66)	4	50	411	
	37	80673-32200	SPRING-RETAINING,HANDLE	4	10	411	
	38	80700-10600	ASSY-REGULATOR,FRONT DOOR(R.H.)(TO MAR-66)	1	1	411	
	39	80700-18400	ASSY-REGULATOR,FRONT DOOR(R.H.)(FROM APR.-'66)	1	1	411	N
	40	80701-10600	ASSY-REGULATOR,FRONT DOOR(L.H.)(TO MAR-66)	1	1	411	
	41	80701-18400	ASSY-REGULATOR,FRONT DOOR(L.H.)(FROM APR.-'66)	1	1	411	N
	42	00314-41010	SCREW TO FIX REGULATOR	8	50	411	
	43	00915-11410	WASHER-LOCK TO FIX REGULATOR	8		411	
	44	80600-10600	ASSY-CYLINDER,DOOR LOCK(R.H.)(TO MAR-66)	1		411	
	45	80600-18400	ASSY-CYLINDER,DOOR LOCK(R.H.)(FROM APR.-'66)	1	1	411	N
	46	80601-10600	ASSY-CYLINDER,DOOR LOCK(L.H.)(TO MAR-66)	1	1	411	
	47	80601-18400	ASSY-CYLINDER,DOOR LOCK(L.H.)(FROM APR.-'66)	1	1	411	N
	48	80590-10601	CLIP-RETAINING,CYLINDER LOCK	2	10	411	
	49	80585-35000	BUMPER-RUBBER	2	1	411	

REVISED: SEPTEMBER,1968

Printed in Japan

NOTE

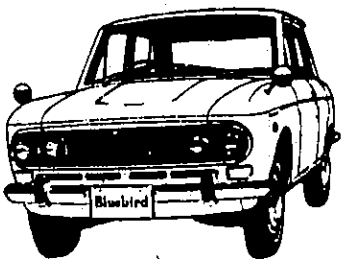

NOTE

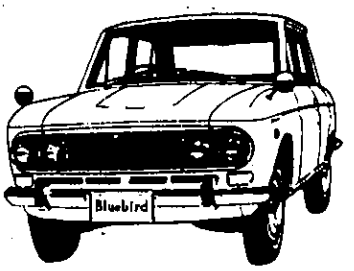

REAR DOOR PANEL

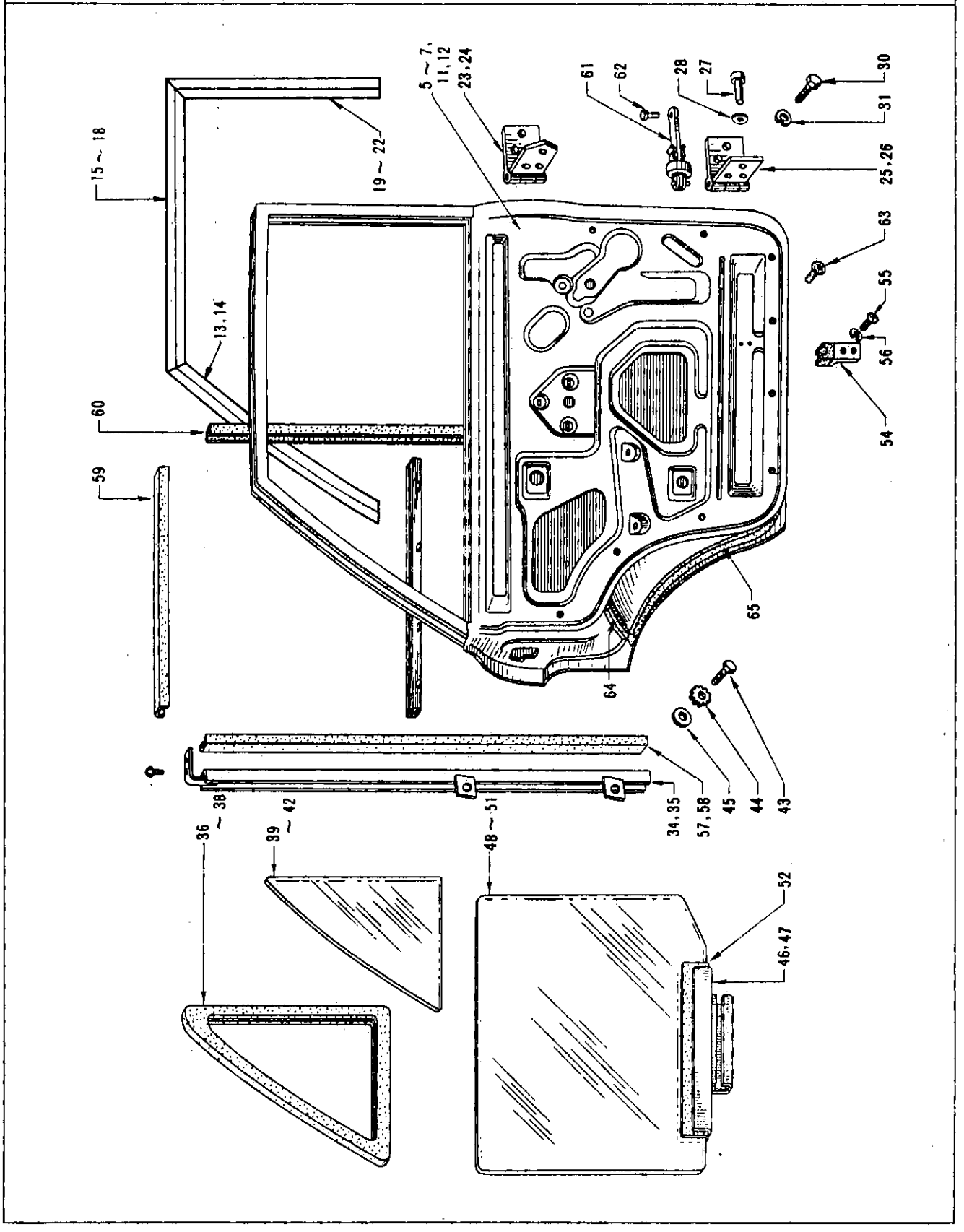

S	KEY NO.	PART NO.	PART NAME	Q'TY	SALES UNIT	MODEL	ICA
			REAR DOOR PANEL				
	1	82100-10632	ASSY-PANEL,REAR DOOR(R.H.)	1	1	411	
	2	82212-11400	SET-MOULDING,REAR DOOR (R.H.)	1	1	411 UTK,1.6L	
	3	82212-19600	SET-MOULDING,REAR DOOR (R.H.)	1	1	WAGON 411	
	4	82210-10901	ASSY-SASH,REAR DOOR(R.H.)	1		WAGON 411	
	5	82100-10931	ASSY-PANEL,REAR DOOR(R.H.)	1		R DRIVE WAGON 411	
	6	82100-11031	ASSY-PANEL,REAR DOOR(R.H.)	1		L DRIVE WAGON 411	
	7	82101-10632	ASSY-PANEL,REAR DOOR(L.H.)	1	1	411	
	8	82213-11400	SET-MOULDING,REAR DOOR (L.H.)	1	1	411 UTK,1.6L	
	9	82213-19600	SET-MOULDING,REAR DOOR (L.H.)	1	1	WAGON 411	
	10	82211-10901	ASSY-SASH,REAR DOOR(L.H.)	1		WAGON 411	
	11	32101-10931	ASSY-PANEL,REAR DOOR(L.H.)	1		R DRIVE WAGON 411	
	12	82101-11031	ASSY-PANEL,REAR DOOR(L.H.)	1		L DRIVE WAGON 411	
	13	82212-18500	MOUDLING-SASH,REAR DOOR,FRONT(R.H.)	1	5	SEDAN 411(B & C TYPE)WAGON 411(A & B TYPE)	

Printed in Japan

REVISED: SEPTEMBER,1968

S KEY NO.	PART NO.	PART NAME	Q'TY	SALES UNIT	MODEL	ICA
14	82213-18500	MOULDING-SASH,REAR DOOR,FRONT(L.H.)	1	5	SEDAN 411(B & C TYPE)WAGON 411(A & B TYPE)	
15	82214-18500	MOULDING-SASH,REAR DOOR,UPPER(R.H.)	1	5	SEDAN 411(B & C TYPE)	
16	82215-18500	MOULDING-SASH,REAR DOOR,UPPER(L.H.)	1	5	SEDAN 411(B & C TYPE)	
17	82214-19600	MOULDING-SASH,REAR DOOR,UPPER(R.H.)	1	1	WAGON 411(A & B TYPE)	
18	82215-19600	MOULDING-SASH,REAR DOOR,UPPER(L.H.)	1		WAGON 411(A & B TYPE)	
19	82216-18500	MOULDING-SASH,REAR DOOR,REAR(R.H.)	1	5	SEDAN 411(B & C TYPE)	
20	82217-18500	MOULDING-SASH,REAR DOOR,REAR(L.H.)	1	5	SEDAN 411(B & C TYPE)	
21	82216-19600	MOULDING-SASH,REAR DOOR,REAR(R.H.)	1		WAGON 411(A & B TYPE)	
22	82217-19600	MOULDING-SASH,REAR DOOR,REAR(L.H.)	1	1	WAGON 411(A & B TYPE)	
23	82400-10602	ASSY-HINGE,REAR DOOR,UPPER(R.H.)	1	1	411	
24	82401-10602	ASSY-HINGE,REAR DOOR,UPPER(L.H.)	1	1	411	
25	82402-10602	ASSY-HINGE,REAR DOOR,LOWER(R.H.)	1	1	411	
26	82403-10602	ASSY-HINGE,REAR DOOR,LOWER(L.H.)	1	1	411	
27	00620-81600	RIVET TO FIX HINGE	6	50	411	

Printed in Japan

REVISED: SEPTEMBER,1968

S	KEY NO.	PART NO.	PART NAME	Q'TY	SALES UNIT	MODEL	ICA
*	28	00915-51500	WASHER-PLAIN TO FIX HINGE	6	50	411	
	29	80451-10600	SHIM-DOOR HINGE,UPPER(FROM C# 4-410-000200)(FROM C# 4-P410-003499)	AR	1	411	
	30	00114-52010	BOLT TO FIX HINGE TO CENTER PILLER	12		411	
	31	00915-11510	WASHER-LOCK TO FIX HINGE TO CENTER PILLER	12		411	
	32	82220-10600	ASSY-SASH,CENTER,REAR DOOR(R.H.)	1	1	SEDAN 411	
	33	82220-10900	ASSY-SASH,CENTER,REAR DOOR(R.H.)	1		WAGON 411	
	34	82221-10600	ASSY-SASH,CENTER,REAR DOOR(L.H.)	1	1	SEDAN 411	
	35	82221-10900	ASSY-SASH,CENTER,REAR DOOR(L.H.)	1		WAGON 411	
	36	82241-10601	WEATHERSTRIP-REAR DOOR PARTITION	2	1	SEDAN 411	
*	37	82241-10900	WEATHERSTRIP-REAR DOOR PARTITION(TO MAR-66)	2	1	WAGON 411	
	38	82241-10901	WEATHERSTRIP-REAR DOOR PARTITION(FROM OCT.-'66)	2	1	WAGON 411	Y
*	39	82255-10802	GLASS-REAR DOOR PARTITION(TOUGHENED)	2		SEDAN 411	
*	40	82255-10803	GLASS-REAR DOOR PARTITION(TOUGHENED,ANTI-SUN)	2		SEDAN 411	
*	41	82255-11000	GLASS-REAR DOOR PARTITION(TOUGHENED)	2		WAGON 411	
	42	82255-11001	GLASS-REAR DOOR PARTITION(TOUGHENED,ANTI-SUN)	2		WAGON 411	
	43	00114-41010	BOLT TO FIX CENTER SASH	2		411	

Printed in Japan

REVISED: SEPTEMBER,1968

S	KEY NO.	PART NO.	PART NAME	Q'TY	SALES UNIT	MODEL	ICA
	44	00916-31410	WASHER-LOCK TO FIX CENTER SASH	2	50	411	
	45	00310-80620	SCREW TO FIX CENTER SASH	2	50	411	
	46	82302-10600	ASSY-CHANNEL,BOTTOM,REAR DOOR GLASS(R.H.)	1	1	411	
☆	47	82303-10600	ASSY-CHANNEL,BOTTOM,REAR DOOR GLASS(L.H.)	1	1	411	
☆	48	82308-10800	GLASS-WINDOW,REAR DOOR (TOUGHENED)	2		SEDAN 411	
☆	49	82308-10801	GLASS-WINDOW,REAR DOOR (TOUGHENED,ANTI-SUN)	2		SEDAN 411	
☆	50	82308-11000	GLASS-WINDOW,REAR DOOR (TOUGHENED)	2		WAGON 411	
☆	51	82308-11001	GLASS-WINDOW,REAR DOOR (TOUGHENED,ANTI-SUN)	2		WAGON 411	
	52	82312-10600	RUBBER-GLAZING,REAR DOOR WINDOW	2		411	
	53	82320-10602	ASSY-WEATHERSTRIP,REAR DOOR WINDOW	2	2	411	
	54	80315-10650	ASSY-SUPPORT & CUSHION DOOR WINDOW	2	1	411	
	55	00314-01220	SCREW TO FIX SUPPORT	4	50	411	
	56	00915-11010	WASHER-LOCK TO FIX SUPPORT	4	100	411	
☆	57	82335-10600	RUBBER-GLASS RUN(D)	2	5	411	
	58	82335-16500	RUBBER-GLASS RUN(D)	2	5	411	Y
	59	82336-10600	RUBBER-GLASS RUN(E)	2	5	411	
	60	82337-16500	RUBBER-GLASS RUN(F)	2	1	411	
	61	82410-10601	ASSY-LINK,CHECK,DOOR	2		411	
	62	00660-51010	RIVET(TO FIX CHECK LINK)	2	50	411	
	63	80929-32200	CAP-DOOR FINISH CLIP	18	1	411	

REVISED: SEPTEMBER,1968

Printed in Japan

S	KEY NO.	PART NO.	PART NAME	Q'TY	SALES UNIT	MODEL	ICA
	64	82976-10600	SEAL-RUBBER,REAR DOOR, UPPER	2	1	411	
	65	82975-10600	SEAL-RUBBER,REAR DOOR, LONG	2		411	

REVISED: SEPTEMBER,1968

Printed in Japan

NOTE

NOTE

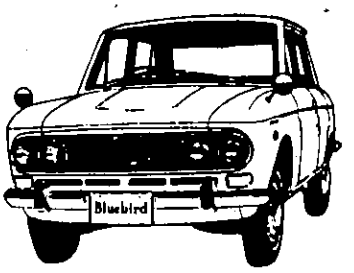

REAR DOOR TRIMMING

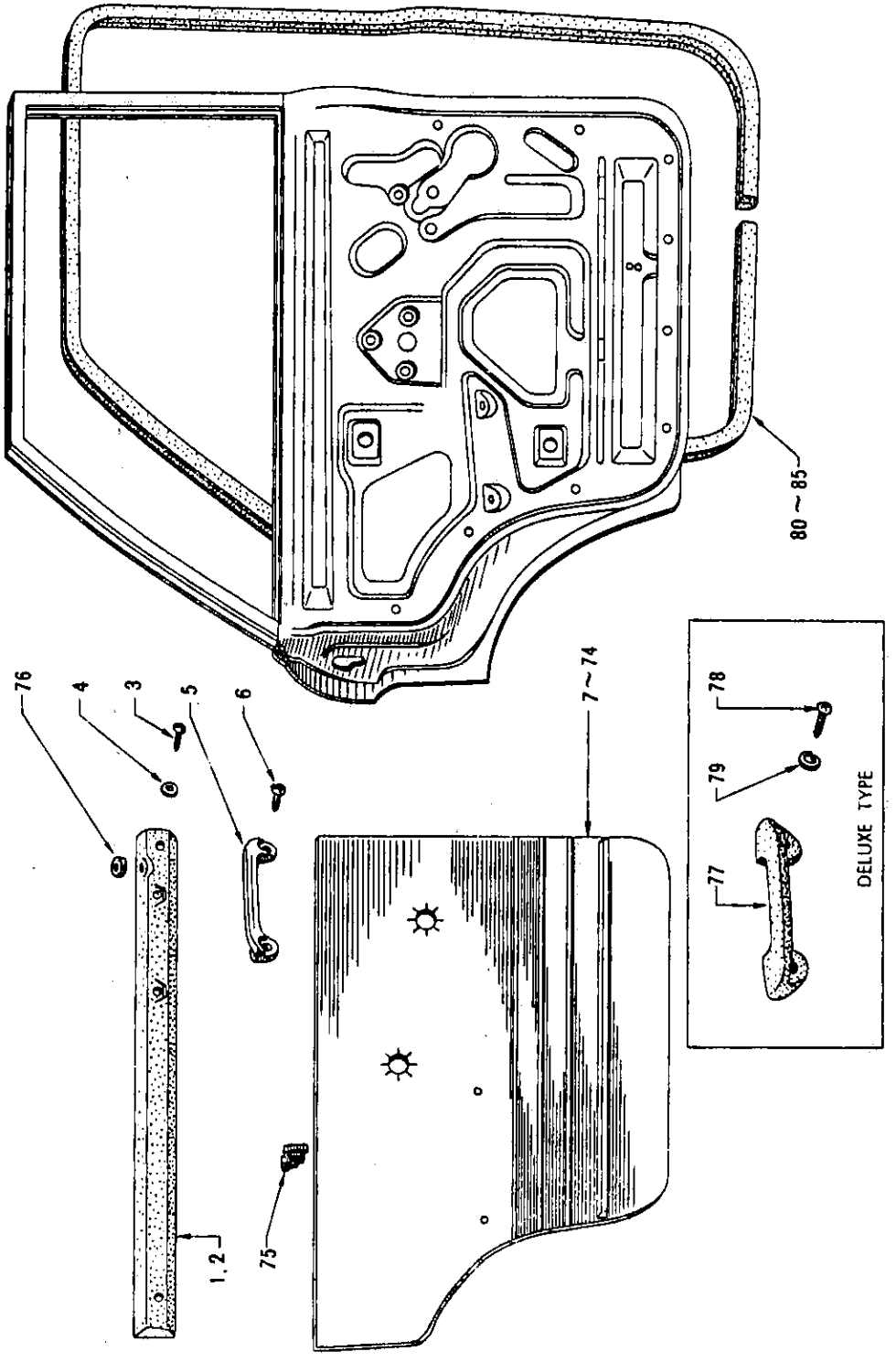

S	KEY NO.	PART NO.	PART NAME	Q'TY	SALES UNIT	MODEL	ICA
			REAR DOOR TRIMMING				
	1	82948-10601	ASSY-MOULDING,GARNISH, REAR DOOR(R.H.)	1		411	
	2	82949-10601	ASSY-MOULDING,GARNISH, REAR DOOR(L.H.)	1		411	
	3	00530-60710	SCREW FIXING MOULDING	4		411	
	4	80999-11100	WASHER-TRIM FIXING MOULDING	4	50	411	
	5	80691-26261	HANDLE-PULL	2	2	411	
	6	00314-01620	SCREW	4	50	411	
	7	82900-13604	ASSY-FINISH,REAR DOOR(R.H.)GRAY,RED & BROWN	1	1	411 UTK	
	8	82901-13604	ASSY-FINISH,REAR DOOR(L.H.)GRAY,RED & BROWN	1	1	411 UTK	
	9	82900-13605	ASSY-FINISH,REAR DOOR(R.H.)BLUE & BLUE	1	1	411 UTK	
	10	82901-13605	ASSY-FINISH,REAR DOOR(L.H.)BLUE & BLUE	1	1	411 UTK	
	11	82900-13606	ASSY-FINISH,REAR DOOR(R.H.)GRAY & BROWN	1	1	411 UTK	
	12	82901-13606	ASSY-FINISH,REAR DOOR(L.H.)GRAY & BROWN	1	1	411 UTK	
	13	82900-13901	ASSY-FINISH,REAR DOOR(R.H.)RICH BLACK	1	1	411 U.S.A.	
	14	82901-13901	ASSY-FINISH,REAR DOOR(L.H.)RICH BLACK	1	1	411 U.S.A.	
	15	82900-17001	ASSY-FINISH,REAR DOOR(R.H.)RICH RED	1		411 U.S.A.	
	16	82901-17001	ASSY-FINISH,REAR DOOR(L.H.)RICH RED	1		411 U.S.A.	

Printed in Japan

REVISED: SEPTEMBER,1968

S	KEY NO.	PART NO.	PART NAME	Q'TY	SALES UNIT	MODEL	ICA
	17	82900-13204	ASSY-FINISH,REAR DOOR(R.H.)GRAY	1	1	411 U,UT,L U,LUT	
	18	82901-13204	ASSY-FINISH,REAR DOOR(L.H.)GRAY	1	1	411 U,UT,L U,LUT	
	19	82900-13205	ASSY-FINISH,REAR DOOR(R.H.)BLUE	1	1	411 U,UT,L U,LUT	
	20	82901-13205	ASSY-FINISH,REAR DOOR(L.H.)BLUE	1	1	411 U,UT,L U,LUT	
	21	82900-13206	ASSY-FINISH,REAR DOOR(R.H.)GRAY & BROWN	1	1	411 U,UT,L U,LUT	
	22	82901-13206	ASSY-FINISH,REAR DOOR(L.H.)GRAY & BROWN	1	1	411 U,UT,L U,LUT	
	23	82900-13813	ASSY-FINISH,REAR DOOR(R.H.)GRAY,RED & BROWN	1	1	411 U,UT,L U,LUT	
	24	82901-13813	ASSY-FINISH,REAR DOOR(L.H.)GRAY,RED & BROWN	1	1	411 U,UT,L U,LUT	
	25	82900-13814	ASSY-FINISH,REAR DOOR(R.H.)BLUE	1	1	411 U,UT,L U,LUT	
	26	82901-13814	ASSY-FINISH,REAR DOOR(L.H.)BLUE	1	1	411 U,UT,L U,LUT	
	27	82900-13207	ASSY-FINISH,REAR DOOR(R.H.)GREEN	1		411 U,UT	
	28	82901-13207	ASSY-FINISH,REAR DOOR(L.H.)GREEN	1		411 U,UT	
	29	82900-13815	ASSY-FINISH,REAR DOOR(R.H.)GRAY & BROWN	1	1	411 U,UT	
	30	82901-13815	ASSY-FINISH,REAR DOOR(L.H.)GRAY & BROWN	1	1	411 U,UT	
	31	82900-13816	ASSY-FINISH,REAR DOOR(R.H.)GREEN	1	1	411 U,UT	
	32	82901-13816	ASSY-FINISH,REAR DOOR(L.H.)GREEN	1	1	411 U,UT	
	33	82900-13604	ASSY-FINISH,REAR DOOR(R.H.)GRAY,RED & BROWN	1	1	OP 411 U, UT,LU,LUT	

Printed in Japan

REVISED: SEPTEMBER,1968

S	KEY NO.	PART NO.	PART NAME	QTY	SALES UNIT	MODEL	ICA
	34	82901-13604	ASSY-FINISH,REAR DOOR(L.H.)GRAY,RED & BROWN	1	1	OP 411 U, UT,LU,LUT	
	35	82900-13605	ASSY-FINISH,REAR DOOR(R.H.)BLUE	1	1	OP 411 U, UT,LU,LUT	
	36	82901-13605	ASSY-FINISH,REAR DOOR(L.H.)BLUE	1	1	OP 411 U, UT,LU,LUT	
	37	82900-13809	ASSY-FINISH,REAR DOOR(R.H.)GRAY,RED & BROWN	1	1	OP.411 U, UT,LU,LUT	
	38	82901-13809	ASSY-FINISH,REAR DOOR(L.H.)GRAY,RED & BROWN	1	1	OP,411 U, UT,LU,LUT	
	39	82900-24000	ASSY-FINISH,REAR DOOR R.H.(RED)FOR BENCH SEA T(FROM OCT.-'66)	1		A&B TYPE 411(EXC.U. S.A.)	
	40	82900-24001	ASSY-FINISH,REAR DOOR R.H.(BLUE)FOR BENCH SE AT(FROM OCT.-'66)	1	1	A&B TYPE 411(EXC.U. S.A.)	
	41	82900-24002	ASSY-FINISH,REAR DOOR R.H.(BROWN)FOR BENCH S EAT(FROM OCT.-'66)	1	1	A&B TYPE 411(EXC.U. S.A.)	
	42	82900-24003	ASSY-FINISH,REAR DOOR R.H.(GREEN)FOR BENCH S EAT(FROM	1	1	A&B TYPE 411(EXC.U. S.A.)	
	43	82900-19104	ASSY-FINISH,REAR DOOR R.H.(RED)FOR BENCH SEA T(FROM OCT.-'66)	1		C TYPE 411 (EXC.U.S.A .)	
	44	82900-19105	ASSY-FINISH,REAR DOOR R.H.(BLUE)FOR BENCH SE AT(FROM OCT.-'66)	1		C TYPE 411 (EXC.U.S.A .)	
	45	82900-19106	ASSY-FINISH,REAR DOOR R.H.(BROWN)FOR BENCH S EAT(FROM OCT.-'66)	1	1	411(EXC.U. S.A.)C TYP E	
	46	82900-19107	ASSY-FINISH,REAR DOOR R.H.(GREEN)FOR BENCH S EAT(FROM OCT.-'66)	1	1	411(EXC.U. S.A.)C TYP E	
	47	82900-19100	ASSY-FINISH,REAR DOOR R.H.(RED)FOR SEPARATE SEAT(FROM OCT.-'66)	1	1	411(EXC.U. S.A.)A&B T YPE	

Printed in Japan

REVISED: SEPTEMBER,1968

S	KEY NO.	PART NO.	PART NAME	Q'TY	SALES UNIT	MODEL	ICA
	48	82900-19101	ASSY-FINISH,REAR DOOR R.H.(BLUE)FOR SEPARATE SEAT(FROM OCT.-'66)	1	1	411(EXC.U.S.A.)A&B TYPE	
	49	82900-19102	ASSY-FINISH,REAR DOOR R.H.(BROWN)FOR SEPARATE SEAT(FROM OCT.-'66)	1	1	411(EXC.U.S.A.)A&B TYPE	
	50	82900-19103	ASSY-FINISH,REAR DOOR R.H.(GREEN)FOR SEPARATE SEAT(FROM OCT.-'66)	1	1	411(EXC.U.S.A.)A&B TYPE	
	51	82900-24100	ASSY-FINISH,REAR DOOR R.H.(RED)FOR SEPARATE SEAT(FROM OCT.-'66)	1	1	411(EXC.U.S.A.)C TYPE	
	52	82900-24101	ASSY-FINISH,REAR DOOR R.H.(BLUE)FOR SEPARATE SEAT(FROM OCT.-'66)	1	1	411(EXC.U.S.A.)C TYPE	
	53	82900-24102	ASSY-FINISH,REAR DOOR R.H.(BROWN)FOR SEPARATE SEAT(FROM OCT.-'66)	1	1	411(EXC.U.S.A.)C TYPE	
	54	82900-24103	ASSY-FINISH,REAR DOOR R.H.(GREEN)FOR SEPARATE SEAT(FROM OCT.-'66)	1	1	411(EXC.U.S.A.)C TYPE	
	55	82900-18703	ASSY-FINISH,REAR DOOR R.H.(RICH BLACK)(FROM OCT.-'66)	1	1	411(U.S.A.)	
	56	82900-18702	ASSY-FINISH,REAR DOOR R.H.(RICH RED)(FROM OCT.-'66)	1	1	411(U.S.A.)	
	57	82901-24000	ASSY-FINISH,REAR DOOR L.H.(RED)FOR BENCH SEAT(FROM OCT.-'66)	1	1	411(EXC.U.S.A.)A&B TYPE	
	58	82901-24001	ASSY-FINISH,REAR DOOR L.H.(BLUE)FOR BENCH SEAT(FROM OCT.-'66)	1	1	411(EXC.U.S.A.)A&B TYPE	
	59	82901-24002	ASSY-FINISH,REAR DOOR L.H.(BROWN)FOR BENCH SEAT(FROM OCT.-'66)	1	1	411(U.S.A.)A&B TYPE	
	60	82901-24003	ASSY-FINISH,REAR DOOR L.H.(GREEN)FOR BENCH SEAT(FROM OCT.-'66)	1	1	411(EXC.U.S.A.)A&B TYPE	

Printed in Japan

REVISED: SEPTEMBER,1968

S	KEY NO.	PART NO.	PART NAME	Q'TY	SALES UNIT	MODEL	ICA
	61	82901-19104	ASSY-FINISH,REAR DOOR L.H.(RED)FOR BENCH SEAT(FROM OCT.-'66)	1	1	411(EXC.U.S.A.)C TYPE	
	62	82901-19105	ASSY-FINISH,REAR DOOR L.H.(BLUE)FOR BENCH SEAT(FROM OCT.-'66)	1		411(EXC.U.S.A.)C TYPE	
	63	82901-19106	ASSY-FINISH,REAR DOOR L.H.(BROWN)FOR BENCH SEAT(FROM OCT.-'66)	1		411(EXC.U.S.A.)C TYPE	
	64	82901-19107	ASSY-FINISH,REAR DOOR L.H.(GREEN)FOR BENCH SEAT(FROM OCT.-'66)	1	1	411(EXC.U.S.A.)C TYPE	
	65	82901-19100	ASSY-FINISH,REAR DOOR L.H.(RED)FOR SEPARATE SEAT(FROM OCT.-'66)	1	1	411(EXC.U.S.A.)A&B TYPE	
	66	82901-19101	ASSY-FINISH,REAR DOOR L.H.(BLUE)FOR SEPARATE SEAT(FROM OCT.-'66)	1	1	411(EXC.U.S.A.)A&B TYPE	
	67	82901-19102	ASSY-FINISH,REAR DOOR L.H.(BROWN)FOR SEPARATE SEAT(FROM OCT.-'66)	1	1	411(EXC.U.S.A.)A&B TYPE	
	68	82901-19103	ASSY-FINISH,REAR DOOR L.H.(GREEN)FOR SEPARATE SEAT(FROM OCT.-'66)	1	1	411(EXC.U.S.A.)A&B TYPE	
	69	82901-24100	ASSY-FINISH,REAR DOOR L.H.(RED)FOR SEPARATE SEAT(FROM OCT.-'66)	1	1	411(EXC.U.S.A.)C TYPE	
	70	82901-24101	ASSY-FINISH,REAR DOOR L.H.(BLUE)FOR SEPARATE SEAT(FROM OCT.-'66)	1	1	411(EXC.U.S.A.)C TYPE	
	71	82901-24102	ASSY-FINISH,REAR DOOR L.H.(BROWN)FOR SEPARATE SEAT(FROM OCT.-'66)	1	1	411(EXC.U.S.A.)C TYPE	
	72	82901-24103	ASSY-FINISH,REAR DOOR L.H.(GREEN)FOR SEPARATE SEAT(FROM OCT.-'66)	1	1	411(EXC.U.S.A.)C TYPE	
	73	82901-18703	ASSY-FINISH,REAR DOOR L.H.(RICH BLACK)(FROM OCT.-'66)	1	1	411(U.S.A.)	

Printed in Japan

REVISED: SEPTEMBER,1968

S	KEY NO.	PART NO.	PART NAME	Q'TY	SALES UNIT	MODEL	ICA
	74	82901-18702	ASSY-FINISH,REAR DOOR L.H.(RICH RED)(FROM OCT.-'66)	1	1	411(U.S.A.)	
	75	80919-32200	CLIP-TRIM PAD	18	10	411	
	76	82963-10600	GROMMET-DOOR INSIDE KNOB	2	20	411	
*	77	80940-11400	COMP.-ARM REST(BLACK)	2	4	411	
	78	00414-43010	SCREW FIXING ARM	4	50	411	
	79	00915-11410	WASHER-LOCK FIXING ARM	4		411	
*	80	76802-10604	ASSY-WEATHERSTRIP,REAR DOOR(R.H.)	1		411(EXC.WAGON)	
	81	76802-24000	ASSY-WEATHERSTRIP,REAR DOOR(R.H.)	1	1	411(EXC.WAGON)	Y
	82	76802-10903	ASSY-WEATHERSTRIP,REAR DOOR(R.H.)	1		WAGON 411	
*	83	76803-10604	ASSY-WEATHERSTRIP,REAR DOOR(L.H.)	1		411(EXC.WAGON)	
	84	76803-24000	ASSY-WEATHERSTRIP,REAR DOOR(L.H.)	1	1	411(EXC.WAGON)	Y
	85	76803-10903	ASSY-WEATHERSTRIP,REAR DOOR(L.H.)	1		WAGON 411	

Printed in Japan

REVISED: SEPTEMBER,1968

NOTE

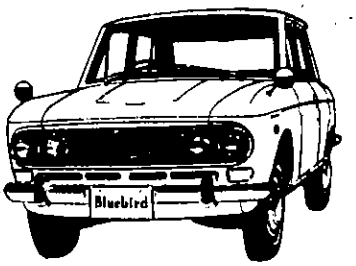

REAR DOOR LOCK & REGULATOR

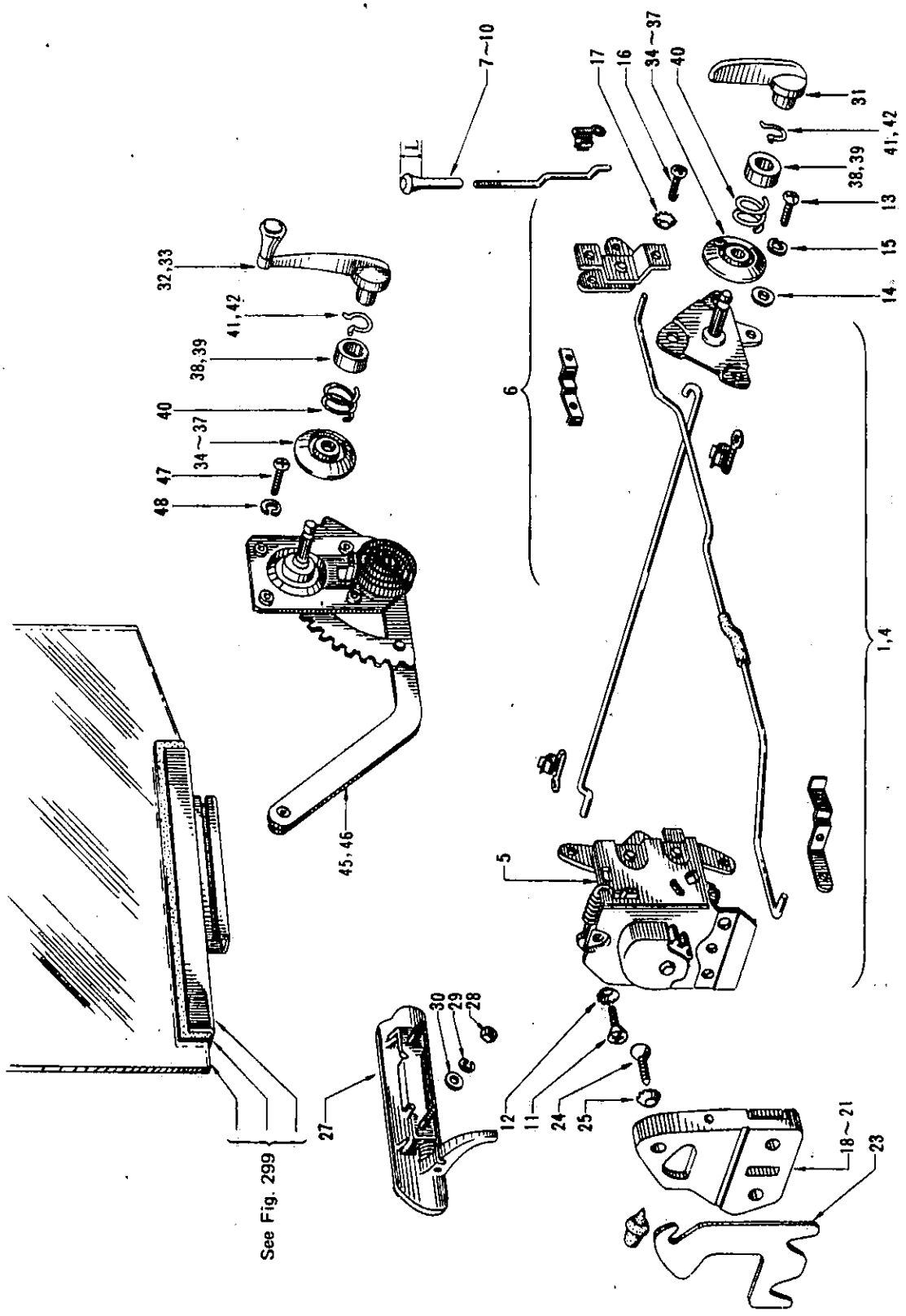

S	KEY NO.	PART NO.	PART NAME	Q'TY	SALES UNIT	MODEL	ICA
			REAR DOOR LOCK & REGULATOR				
	1	82500-10600	ASSY-LOCK&REMOTE CONTROL,REAR DOOR(R.H.)	1	1	411	
	2	82502-10600	ASSY-LOCK,REAR DOOR(R.H.)	1	1	411	
	3	82504-10600	ASSY-REMOTE CONTROL(R.H.)	1	1	411	
	4	82501-10600	ASSY-LOCK&REMOTE CONTROL,REAR DOOR(R.H.)	1	1	411	
	5	82503-10600	ASSY-LOCK,REAR DOOR(L.H.)	1	1	411	
	6	82505-10600	ASSY-REMOTE CONTROL(L.H.)	1	1	411	
	7	80595-36700	KNOB-HANDLE(BLACK)(TO MAR-66)	2	10	411	
	8	80595-18400	KNOB-HANDLE(BLACK)(A)L=10 MM(FROM APR.-'66)	2		411	N
	9	80595-18402	KNOB-HANDLE(B)L=15 MM	2		OP. 411	
	10	80595-18403	KNOB-HANDLE(C)L=5 MM	2	10	OP.411	
	11	00324-00810	SCREW TO FIX LOCK TO DOOR	6	50	411	
	12	00916-41010	WASHER-LOCK TO FIX LOCK TO DOOR	6		411	
	13	00314-00810	SCREW TO FIX REMOTE CONTROL TO DOOR	6	50	411	
	14	00915-11010	WASHER-LOCK TO FIX REMOTE CONTROL TO DOOR	6	100	411	
	15	00915-41010	WASHER-PLAIN TO FIX REMOTE CONTROL TO DOOR	6		411	
	16	00324-00810	SCREW TO FIX BELL CRANK TO DOOR	4	50	411	

REVISED: SEPTEMBER,1968

Printed in Japan

SYM NO.	PART NO.	PART NAME	Q'TY	SALES UNIT	MODEL	ICA
17	00916-41010	WASHER-LOCK TO FIX BEL L CRANK TO DOOR	4		411	
18	80570-10602	ASSY-STRIKER,DOOR LOCK (R.H.)	1	1	411	
19	80570-10901	ASSY-STRIKER,DOOR LOCK (R.H.)	1	1	WAGON 411	Y
20	80571-10602	ASSY-STRIKER,DOOR LOCK (L.H.)	1	1	411	
21	80571-10901	ASSY-STRIKER,DOOR LOCK (L.H.)	1	1	WAGON 411	Y
22	80585-35000	BUMPER-RUBBER	2	1	411	
23	80630-10600	SHIM-ADJUSTING	AR	10	411	
24	00324-43010	SCREW TO FIX STRIKER T O PILLAR	4	50	411	
25	00916-41410	WASHER-LOCK TO FIX STR IKER TO PILLAR	4		411	
26	82605-10601	ASSY-HANDLE,DOOR OUTSI DE,REAR(R.H.)	1	1	411	
27	82606-10601	ASSY-HANDLE,DOOR OUTSI DE,REAR(L.H.)	1	2	411	
28	00314-01210	SCREW TO FIX HANDLE	4	50	411	
29	00915-11010	WASHER-LOCK TO FIX HAN DLE	4	100	411	
30	00915-41010	WASHER-PLAIN TO FIX HA NDLE	4		411	
31	80672-32200	HANDLE-DOOR INSIDE	2	2	411	
32	80760-10600	ASSY-HANDLE,DOOR WINDO W REGULATOR(TO MAR-66)	2	2	411	
33	80760-73000	ASSY-HANDLE,DOOR WINDO W REGULATOR(FROM APR.- '66)	2	1	411	N
34	80675-10600	ESCUTCHEON-DOOR HANDLE (TO MAR-66)	2	2	411	

Printed in Japan

REVISED: SEPTEMBER,1968

S	KEY NO.	PART NO.	PART NAME	Q'TY	SALES UNIT	MODEL	ICA
	35	80675-18400	ESCUTCHEON-INSIDE HAND LE(FROM APR.-'66)	2	5	411	N
	36	80675-10600	ESCUTCHEON-DOOR HANDLE (TO MAR-66)	2	2	411	
	37	80761-18400	ESCUTCHEON-REGULATOR H ANDLE(FROM APR.-'66)	2	5	411	N
	38	80676-10400	CROWN-ESCUTCHEON(TO MA R-66)	4	2	411	
	39	80676-10400	CROWN-ESCUTCHEON(FROM APR.-'66)	2	2	411	Y
	40	80674-10601	SPRING-ESCUTCHEON(UP T O MAR.-'66)	4	50	411	
	41	80673-32200	SPRING-RETAINING,HANDL E(TO SEP-66)	4	10	411	
	42	80672-73000	SPRING-RETAINING,HANDL E(FROM OCT.-'66)	4		411	N
	43	82700-10600	ASSY-REGULATOR,REAR DO OR(R.H.)(TO MAR-64)	1		411	
	44	82700-18400	ASSY-REGULATOR,REAR DO OR(R.H.)(FROM APR.-'64)	1	1	411	N
	45	82701-10600	ASSY-REGULATOR,REAR DO OR(L.H.)(TO MAR-66)	1	1	411	
	46	82701-18400	ASSY-REGULATOR,REAR DO OR(L.H.)(FROM APR.-'66)	1	1	411	N
	47	00314-41010	SCREW TO FIX REGULATOR TO DOOR	8	50	411	
	48	00915-11410	WASHER-SPRING TO FIX R EGULATOR TO DOOR	8		411	

NOTE

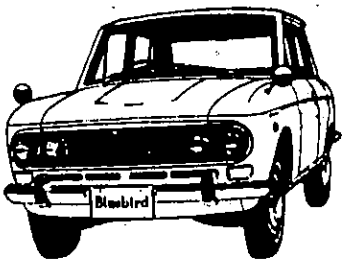

NOTE

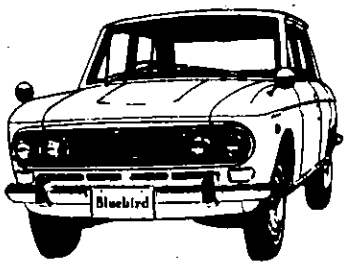

REAR FENDER & REAR PANEL

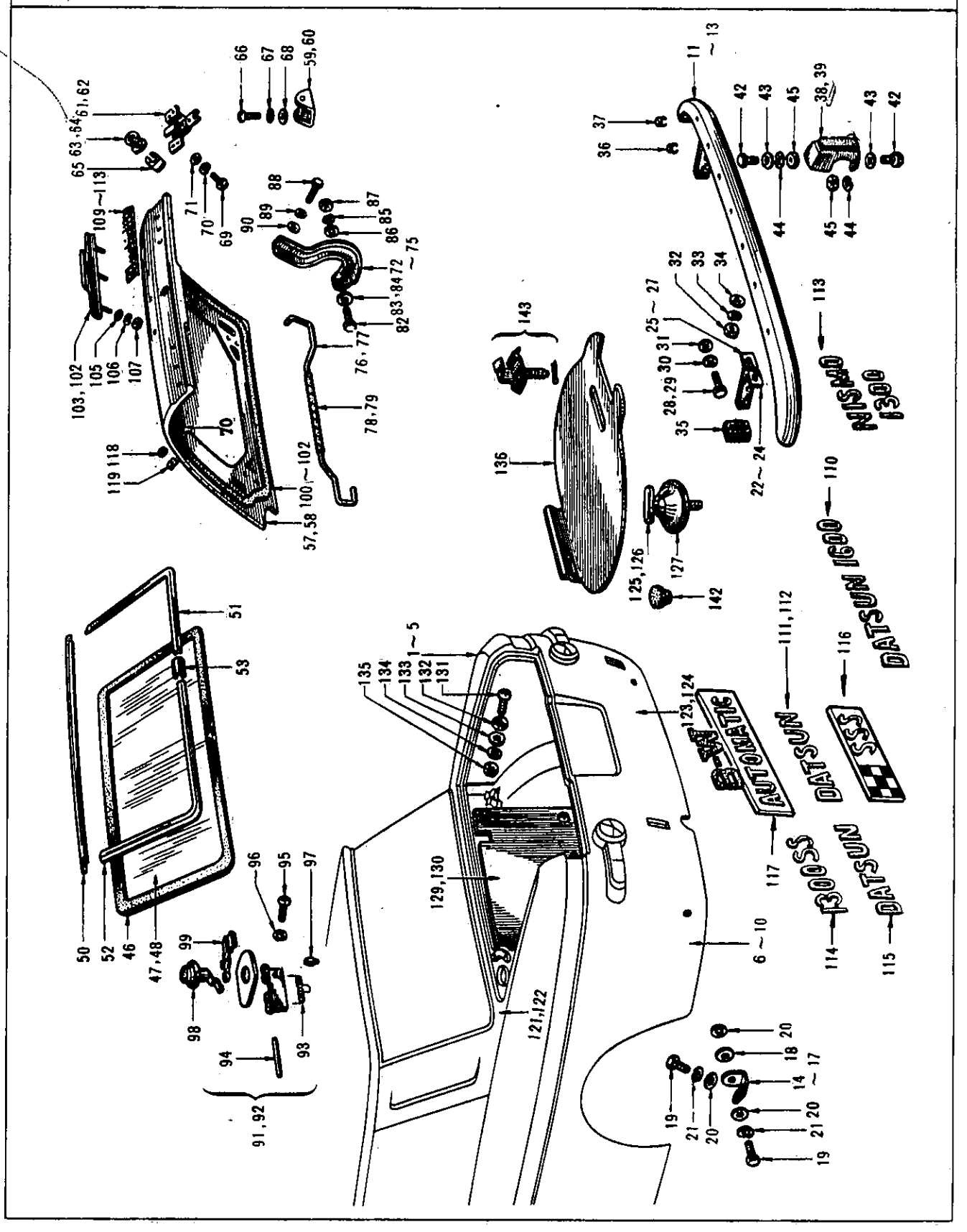

S	KEY NO.	PART NO.	PART NAME	Q'TY	SALES UNIT	MODEL	ICA
			REAR FENDER & REAR PANEL				
	1	78100-10630	ASSY-FENDER,REAR(R.H.)(TO MAR-66)	1	1	SEDAN 411	
	2	78100-18430	ASSY-FENDER,REAR(R.H.)(FROM APR.-'66)	1	1	SEDAN 411	N
	3	78100-10930	ASSY-FENDER,REAR(R.H.)(TO MAR-66)	1		WAGON 411	
	4	78100-19600	ASSY-FENDER,REAR(R.H.)(FROM APR.-'66)	1	1	WAGON R DRIVE 411	N
*	5	78100-19800	ASSY-FENDER,REAR(R.H.)(FROM APR.-'66)	1	1	WAGON L DRIVE 411	N
	6	78101-10630	ASSY-FENDER,REAR(L.H.)(TO MAR-66)	1	1	SEDAN 411	
	7	78101-18430	ASSY-FENDER,REAR(L.H.)(FROM APR.-'66)	1	1	SEDAN 411	N
	8	78101-10930	ASSY-FENDER,REAR(L.H.)(TO MAR-66)	1		WAGON 411	
	9	78101-19600	ASSY-FENDER,REAR(L.H.)(FROM APR.-'66)	1	1	WAGON R DRIVE 411	N
*	10	78101-19800	ASSY-FENDER,REAR(L.H.)(FROM APR.-'66)	1	1	WAGON L DRIVE 411	N
	11	85000-13200	ASSY-BUMPER,REAR(TO MAR-66)	1		411(EXC.WAGON)	
	12	85000-18400	ASSY-BUMPER,REAR(FROM APR.-'66)	1	1	411(EXC.WAGON)	N
	13	85000-13400	ASSY-BUMPER,REAR	1	1	WAGON 411	
	14	85658-13200	BRACKET-REAR BUMPER,SIDE(TO MAR-66)	2		SEDAN 411	
	15	85658-18402	BRACKET-REAR BUMPER,SIDE(R.H.)(FROM APR.-'66)	1		SEDAN 411	N

REVISED: SEPTEMBER,1968

Printed in Japan

S	KEY NO.	PART NO.	PART NAME	Q'TY	SALES UNIT	MODEL	ICA
	16	85659-18402	BRACKET-REAR BUMPER,SIDE(L.H.)(FROM APR.-'66)	1		SEDAN 411	N
	17	85658-10900	BRACKET-REAR BUMPER,SIDE	2	10	WAGON 411	
	18	62671-36700	WASHER-RUBBER TO FIX BUMPER SIDE	AR		411	
	19	00914-52010	BOLT TO FIX BUMPER SIDE	4		411	
	20	00915-41510	WASHER-PLAIN TO FIX BUMPER SIDE	6		411	
	21	00915-11510	WASHER-LOCK TO FIX BUMPER SIDE	4		411	
*	22	85221-10600	STAY-REAR BUMPER,OUTER (TO MAR-66)	2	1	411	
	23	85221-18401	STAY-REAR BUMPER,OUTER (R.H.)(FROM APR.-'66)	1	1	411	N
	24	85222-18401	STAY-REAR BUMPER,OUTER (L.H.)(FROM APR.-'66)	1	1	411	N
*	25	85223-10600	STAY-REAR BUMPER,INNER (TO MAR-66)	2	1	411	
	26	85223-18401	STAY-REAR BUMPER,INNER (R.H.)(FROM APR.-'66)	1	1	411	N
	27	85224-18401	STAY-REAR BUMPER,INNER (L.H.)(FROM APR.-'66)	1	1	411	N
	28	00154-83510	BOLT TO FIX STAY TO MEMBER	4	100	411	
	29	85227-10600	BOLT TO FIX STAY TO MEMBER	4	10	411	N
	30	00915-11810	WASHER-LOCK TO FIX STAY TO MEMBER	4	50	411	
	31	00915-51810	WASHER-PLAIN TO FIX STAY TO MEMBER	4		411	
	32	00911-14610	NUT TO FIX BUMPER TO STAY	4		411	

Printed in Japan

REVISED: SEPTEMBER.1968

S	KEY NO.	PART NO.	PART NAME	Q'TY	SALES UNIT	MODEL	ICA
	33	00915-11610	WASHER-LOCK TO FIX BUMPER TO STAY	4		411	
	34	00915-51610	WASHER-PLAIN TO FIX BUMPER TO STAY	4		411	
	35	85225-10601	RUBBER-SEALING,REAR BUMPER STAY	2	5	411	
*	36	85226-10600	PLUG-REVERSE LAMP HOLE	2	50	A TYPE 411	
	37	62677-10601	PLUG-BUMPER,OVERRIDER HOLE	2	1	A TYPE 411	
	38	62665-13600	OVERRIDER(L.H.)	1	1	411(EXC.A TYPE)	
	39	62666-13600	OVERRIDER(R.H.)	1		411(EXC.A TYPE)	
	40	62670-13600	RUBBER-OVERRIDER(TO MAR-66)	2	2	411(EXC.A TYPE)	
	41	62670-18400	RUBBER-OVERRIDER(FROM APR.-'66)	2	5	411(EXC.A TYPE)	Y
	42	00114-52010	BOLT TO FIX OVERRIDER	4		411(EXC.A TYPE)	
	43	00915-41510	WASHER-PLAIN TO FIX OVERRIDER	4		411(EXC.A TYPE)	
	44	00915-11510	WASHER-LOCK TO FIX OVERRIDER	4		411(EXC.A TYPE)	
	45	00911-14510	NUT TO FIX OVERRIDER	4		411(EXC.A TYPE)	
	46	79710-13600	WEATHERSTRIP-BACK WINDOW	1	1	SEDAN 411(EXC.A TYPE)	
*	47	79713-10800	GLASS-BACK WINDOW(TOUGHENED)	1		411	
*	48	79713-10801	GLASS-BACK WINDOW(TOUGHENED,ANTI-SUN)	1		411	
	49	79810-13600	SET-MOULDING,BACK WINDOW	1	2	SEDAN 411	

REVISED: SEPTEMBER,1968

Printed in Japan

S	KEY NO.	PART NO.	PART NAME	Q'TY	SALES UNIT	MODEL	ICA
	50	79811-13600	MOULDING-BACK WINDOW,TOP	1	2	SEDAN 411	
	51	79812-13600	MOULDING-BACK WINDOW,SIDE(R.H.)	1	1	SEDAN 411	
	52	79813-13600	MOULDING-BACK WINDOW,SIDE(L.H.)	1	1	SEDAN 411	
	53	72816-11400	CLIP-MOULDING,TOP	1	10	SEDAN 411	
	54	79815-13600	MOULDING-CORNER(R.H.)	1		SEDAN 411	
	55	79816-13600	MOULDING-CORNER(L.H.)	1		SEDAN 411	
	56	00533-62620	SCREW(TO FIX MOULDING CORNER)	2		SEDAN 411	
	57	84300-16530	ASSY-PANEL,TRUNK LID(TO MAR-66)	1		411	
	58	84300-18430	ASSY-PANEL,TRUNK LID(FROM APR.-'66)	1		411	N
*	59	84420-10601	STRIKER-TRUNK LID LOCK (TO MAR-66)	1	2	SEDAN 411	
	60	84420-18400	STRIKER-TRUNK LID LOCK (FROM APR.-'66)	1	5	SEDAN 411	N
*	61	84430-10600	ASSY-LOCK,TRUNK LID(TO MAR-66)	1		SEDAN 411	
	62	84430-18400	ASSY-LOCK,TRUNK LID(FROM APR.-'66)	1	5	SEDAN 411	N
	63	84460-10600	ASSY-CYLINDER,TRUNK LID LOCK(TO MAR-66)	1		SEDAN 411	
	64	84460-18400	ASSY-CYLINDER,TRUNK LID LOCK(FROM APR.-'66)	1	1	SEDAN 411	N
*	65	80590-10600	CLIP-RETAINING,CYLINDER LOCK	1	10	SEDAN 411	
	66	00314-41610	SCREW TO FIX STRIKER	2	50	SEDAN 411	
	67	00915-11410	WASHER-LOCK TO FIX STRIKER	2		SEDAN 411	
	68	00915-41410	WASHER-PLAIN TO FIX STRIKER	2		SEDAN 411	

Printed in Japan

REVISED: SEPTEMBER,1968

S	KEY NO.	PART NO.	PART NAME	Q'TY	SALES UNIT	MODEL	ICA
	69	00314-01210	SCREW TO FIX LOCK	4	50	SEDAN 411	
	70	00915-11010	WASHER-LOCK TO FIX LOCK	4	100	SEDAN 411	
	71	00915-41010	WASHER-PLAIN TO FIX LOCK	4		SEDAN 411	
*	72	84512-10602	ASSY-HINGE,TRUNK LID(R.H.)(TO MAR-66)	1	1	SEDAN 411	
	73	84510-18400	ASSY-HINGE,TRUNK LID(R.H.)(FROM APR.-'66)	1	1	SEDAN 411	N
*	74	84513-10602	ASSY-HINGE,TRUNK LID(L.H.)(TO MAR-66)	1	1	SEDAN 411	
	75	84511-18400	ASSY-HINGE,TRUNK LID(L.H.)(FROM APR.-'66)	1	1	SEDAN 411	N
	76	84532-10653	BAR-TORSION,TRUNK LID(R.H.)(TO MAR-66)	1	1	SEDAN 411	
	77	84532-18451	BAR-TORSION,TRUNK LID(R.H.)(FROM APR.-'66)	1	1	SEDAN 411	N
*	78	84537-10600	RUBBER-ANTI-SQUEAK,TORSION BAR	1	5	SEDAN 411	
*	79	84537-24000	RUBBER-ANTI-SQUEAK,TORSION BAR	1	5	SEDAN 411	Y
	80	84533-10603	BAR-TORSION,TRUNK LID(L.H.)(TO MAR-66)	1	1	SEDAN 411	
	81	84533-18401	BAR-TORSION,TRUNK LID(L.H.)(FROM APR.-'66)	1	1	SEDAN 411	N
	82	84535-10601	PIN-TRUNK LID HINGE	2	1	SEDAN 411	
	83	00915-41510	WASHER-PLAIN(FOR SPACER)(TO MAR-66)	2		SEDAN 411	
	84	84541-18400	WASHER-PLAIN(FOR SPACER)(FROM APR.-'66)	2	10	SEDAN 411	N
	85	00915-11410	WASHER-LOCK TO FIX HINGE TO BRACKET	2		SEDAN 411	
	86	00915-41410	WASHER-PLAIN TO FIX HINGE TO BRACKET	2		SEDAN 411	

Printed in Japan

REVISED: SEPTEMBER,1968

S	KEY NO.	PART NO.	PART NAME	Q'TY	SALES UNIT	MODEL	ICA
	87	00911-14410	NUT TO FIX HINGE TO BRACKET	2		SEDAN 411	
	88	00114-52010	BOLT TO FIX HINGE TO PANEL	4		SEDAN 411	
	89	00915-11510	WASHER-LOCK TO FIX HINGE TO PANEL	4		SEDAN 411	
	90	00915-41510	WASHER-PLAIN TO FIX HINGE TO PANEL	4		SEDAN 411	
	91	84350-10600	ASSY-LID,FUEL FILLER(TO MAR-66)	1	1	SEDAN 411	
*	92	84350-18400	ASSY-LID,FUEL FILLER(FROM APR.-'66)	1	1	SEDAN 411	N
*	93	84356-10600	SPRING-HINGE,FUEL FILLER LID	1	10	SEDAN 411	
	94	84357-10600	PIN-HINGE,FUEL FILLER LID	1	1	SEDAN 411	
	95	00314-01010	SCREW	2		SEDAN 411	
*	96	00915-11000	WASHER-LOCK	2	50	SEDAN 411	
	97	68643-04100	BUMPER-COMPARTMENT LID	2	10	SEDAN 411	
	98	84360-11400	ASSY-LOCK,FUEL FILLER LID	1	1	SEDAN 411	
	99	80590-10601	CLIP-RETAINING,CYLINDER LOCK	1	10	SEDAN 411	
	100	84806-10601	WEATHERSTRIP-TRUNK LID (TO MAR-66)	1	1	SEDAN 411	
*	101	84806-18400	WEATHERSTRIP-TRUNK LID (FROM APR.-'66)	1	1	SEDAN 411	N
	102	84806-24000	WEATHERSTRIP-TRUNK LID	1	1	SEDAN 411	Y
	103	84451-10600	HANDLE-TRUNK LID(TO MAR-66)	1		SEDAN 411	
	104	84451-18400	HANDLE-TRUNK LID(FROM APR.-'66)	1		SEDAN 411	N
	105	00915-40810	WASHER-PLAIN TO FIX HANDLE	3		SEDAN 411	

Printed in Japan

REVISED: SEPTEMBER,1968

S	KEY NO.	PART NO.	PART NAME	Q'TY	SALES UNIT	MODEL	ICA
	106	00915-10810	WASHER-LOCK TO FIX HANDLE	3		SEDAN 411	
	107	00911-10810	NUT TO FIX HANDLE	3	50	SEDAN 411	
	108	84811-15800	EMBLEM-TRUNK LID"BLUEBIRD"(TO MAR-66)	1	2	UTK 411	
	109	84811-19400	EMBLEM-TRUNK LID"BLUEBIRD 1300 SS"(FROM APR.-'66)	1	2	UTK 411	N
	110	84811-18900	EMBLEM-TRUNK LID"DATSUN 1600"	1	2	1.6L 411	
*	111	84811-17001	EMBLEM-TRUNK LID"DATSUN"(TO MAR-66)	1	2	411	
	112	84811-19101	EMBLEM-TRUNK LID"DATSUN"(FROM APR.-'66)	1	2	411	N
*	113	84811-17000	EMBLEM-TRUNK LID(NISMO)	1	2	OP. 411	
	114	84812-16700	EMBLEM-"1300 SS"	1	2	UTK 411	
	115	84811-19101	EMBLEM-"DATSUN"	1	2	1.6L 411	
	116	62810-18800	MARK-"SSS"	1	2	1.6L 411	
	117	63803-73701	MARK-"B-W"	1	1	1.6L 411	
	118	97331-32200	WASHER-VINYL	3	1	SEDAN 411	
*	119	00918-10500	SPIRE-FIXING	3	50	SEDAN 411	
	120	84808-10600	PLUG-TRUNK LID HOLE REINFORCEMENT	2	5	411	
	121	79110-10630	ASSY-PANEL,REAR WAIST(TO MAR-66)	1		411	
	122	79109-18430	ASSY-PANEL,REAR WAIST(FROM APR.-'66)	1		411	N
*	123	79100-10630	ASSY-PANEL,REAR(TO MAR-66)	1	1	SEDAN 411	
	124	79100-18430	ASSY-PANEL,REAR(FROM APR.-'66)	1	1	SEDAN 411	N

REVISED: SEPTEMBER,1968

Printed in Japan

S	KEY NO.	PART NO.	PART NAME	Q'TY	SALES UNIT	MODEL	ICA
*	125	57210-13200	ASSY-HANDLE,SPARE TIRE CLAMP(TO SEP-66)	1	1	SEDAN 411	
	126	57210-16500	ASSY-HANDLE,SPARE TIRE CLAMP(FROM OCT.-'65)	1	1	SEDAN 411	Y
	127	57216-10600	ASSY-CLAMP,SPARE TIRE(TO C/# P411-174350,PL4 11-51162,RL411-8678)	1	10	SEDAN 411	
	128	57216-24000	ASSY-CLAMP,SPARE TIRE(FROM C/# P411-174350,P L411-51162,RL411-8678)	1	5	SEDAN 411	N
	129	84901-11400	ASSY-FINISH,TRUNK ROOM	1	1	SEDAN 411	
	130	84901-18500	ASSY-FINISH,TRUNK ROOM (FROM APR.-'66)	1	1	SEDAN 411	N
	131	00334-01610	SCREW TO FIX FINISH	3		SEDAN 411	
	132	00915-81000	WASHER-FINISH TO FIX F INISH	3		SEDAN 411	
	133	00915-41010	WASHER-PLAIN TO FIX FI NISH	3		SEDAN 411	
	134	00915-11010	WASHER-LOCK TO FIX FIN ISH	3	100	SEDAN 411	
	135	00911-14010	NUT TO FIX FINISH	3		SEDAN 411	
	136	57305-11400	COVER-SPARE TIRE	1		SEDAN 411	
	137	84920-11400	CLAMP-SPARE TIRE COVER	4	1	SEDAN 411	
	138	84921-11400	SPRING NUT-SPARE TIRE FIX	8	1	SEDAN 411	
	139	84904-13600	MAT-TRUNK FLOOR(TO MAR -66)	1	1	SEDAN 411	
	140	84904-16600	MAT-TRUNK FLOOR(FROM A PR.-'66)	1		SEDAN 411	Y
	141	84904-17100	MAT-TRUNK FLOOR FOR TH E MODEL WITH A CRANK H ANDLE	1	1	OP.SEDAN 4 11	
	142	32021-35000	PLUG	1	5	SEDAN 411	

Printed in Japan

REVISED: SEPTEMBER.1968

S	KEY NO.	PART NO.	PART NAME	Q'TY	SALES UNIT	MODEL	ICA
	143	99610-10600	ASSY-CLAMP,TIRE STOPPE R	1	10	SEDAN 411	
*	144	99607-10600	GROMMET-BODY JACK SEAT	1	2	SEDAN 411	
	145	24256-10600	GROMMET-RUBBER,REAR AP RON	1	10	SEDAN 411	
	146	79930-10600	BOARD-SEALING,SEAT BAC K SUPPORT	1	1	SEDAN 411	

REVISED: SEPTEMBER,1968

Printed in Japan

NOTE

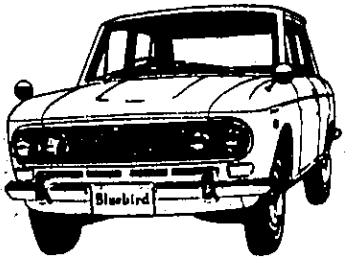

NOTE

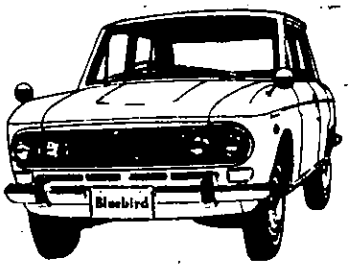

TAIL GATE (WAGON)

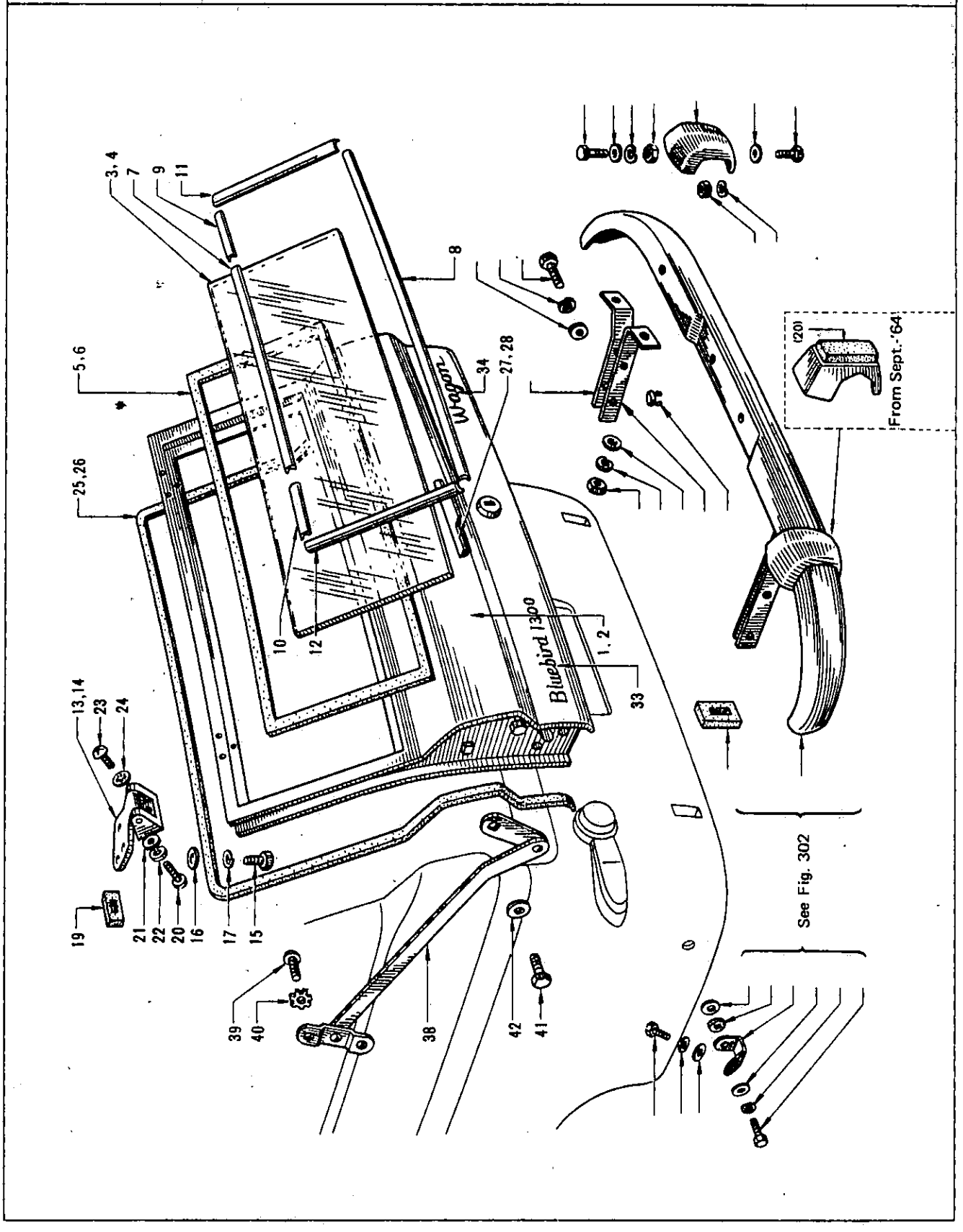

S	KEY NO.	PART NO.	PART NAME	Q'TY	SALES UNIT	MODEL	ICA
			TAIL GATE (WAGON)				
*	1	90101-17490	ASSY-PANEL,TAIL GATE(TO MAR-66)	1	1	WAGON 411	
	2	90101-19690	ASSY-PANEL,TAIL GATE(FROM APR.-'66)	1	1	WAGON 411	N
	3	90304-11000	GLASS-TAIL GATE WINDOW (TOUGHENED)	1		WAGON 411	
	4	90304-11001	GLASS-TAIL GATE WINDOW (TOUGHENED,ANTI-SUN)	1		WAGON 411	
*	5	90307-10900	WEATHERSTRIP-TAIL GATE WINDOW	1	1	WAGON 411	
	6	90307-10901	WEATHERSTRIP-TAIL GATE WINDOW	1	2	WAGON 411	Y
	7	90903-10900	MOULDING-TAIL GATE,UPPER	1		WAGON 411	
	8	90904-10900	MOULDING-TAIL GATE,LOWER	1	1	WAGON 411	
	9	90905-10900	MOULDING-TAIL GATE,UPPER SIDE(R.H.)	1		WAGON 411	
	10	90906-10900	MOULDING-TAIL GATE,UPPER SIDE(L.H.)	1	1	WAGON 411	
	11	90907-10900	MOULDING-TAIL GATE,SIDE(R.H.)	1	1	WAGON 411	
	12	90908-10900	MOULDING-TAIL GATE,SIDE(L.H.)	1	1	WAGON 411	
	13	90401-10900	ASSY-HINGE,TAIL GATE(R.H.)	1		WAGON 411	
	14	90402-10900	ASSY-HINGE,TAIL GATE(L.H.)	1	1	WAGON 411	
	15	00114-52010	BOLT TO FIX HINGE TO BODY	6		WAGON 411	

Printed in Japan

REVISED: SEPTEMBER,1968

S	KEY NO.	PART NO.	PART NAME	Q'TY	SALES UNIT	MODEL	ICA
	16	00915-41510	WASHER-PLAIN TO FIX HINGE TO BODY	6		WAGON 411	
	17	00915-11510	WASHER-LOCK TO FIX HINGE TO BODY	6		WAGON 411	
	18	90418-10900	SHIM-TAIL GATE HINGE	4	20	WAGON 411	
	19	90408-10902	SEAL-DUST,TAIL GATE	4	1	WAGON 411	
	20	00314-41610	SCREW FIX TO HINGE GATE	4	50	WAGON 411	
	21	00915-41410	WASHER-PLAIN FIX TO HINGE GATE	4		WAGON 411	
	22	00915-11410	WASHER-LOCK FIX TO HINGE GATE	4		WAGON 411	
	23	00334-41610	SCREW FIX TO HINGE GATE	2		WAGON 411	
	24	00916-41510	WASHER-TOOTH LOCK FIX TO HINGE GATE	2	50	WAGON 411	
	25	90902-10900	WEATHERSTRIP-TAIL GATE ,OUTER(TO SEP-66)	1	1	WAGON 411	
	26	90902-19600	WEATHERSTRIP-TAIL GATE ,OUTER(FROM OCT.-'66)	1	1	WAGON 411	N
	27	84451-10600	HANDLE-TRUNK LID(TO MAR-66)	1		WAGON 411	
	28	84451-18400	HANDLE-TRUNK LID(FROM APR.-'66)	1		WAGON 411	N
	29	00915-40810	WASHER-PLAIN	3		WAGON 411	
	30	00915-10810	WASHER-LOCK	3		WAGON 411	
	31	00911-10810	NUT	3	50	WAGON 411	
	32	90909-10900	PAD-WEATHERSTRIP	2		WAGON 411	
	33	84811-16600	EMBLEM-TAIL GATE,"BLUE BIRD 1300"(TO MAR.-'66)	1		WAGON 411	
	34	84812-10900	MARK-"WAGON"(TO MAR.-'66)	1	2	WAGON 411	

Printed in Japan

REVISED: SEPTEMBER,1968

S	KEY NO.	PART NO.	PART NAME	Q'TY	SALES UNIT	MODEL	ICA
	35	84812-10901	EMBLEM-TAIL GATE"WAGON "(FROM APR.-'66)	1	2	WAGON 411	Y
	36	00918-11000	SPIRE-FIXING	6		WAGON 411	
	37	90420-10900	ASSY-STAY,TAIL GATE(R. H.)	1	1	WAGON 411	
	38	90421-10900	ASSY-STAY,TAIL GATE(L. H.)	1	1	WAGON 411	
	39	00324-52010	SCREW TO FIX STAY TO B ODY	4	50	WAGON 411	
	40	00916-41510	WASHER-TOOTH LOCK TO F IX STAY TO BODY	4	50	WAGON 411	
	41	00114-41210	BOLT TO FIX STAY TO PA NEL	2		WAGON 411	
	42	00915-11510	WASHER-LOCK TO FIX STA Y TO PANEL	2		WAGON 411	

NOTE

NOTE

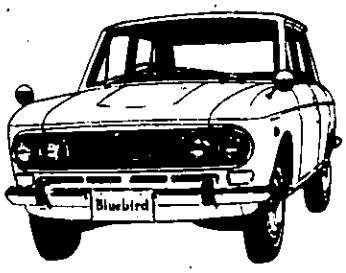

TAIL GATE TRIMMING & SIDE WINDOW

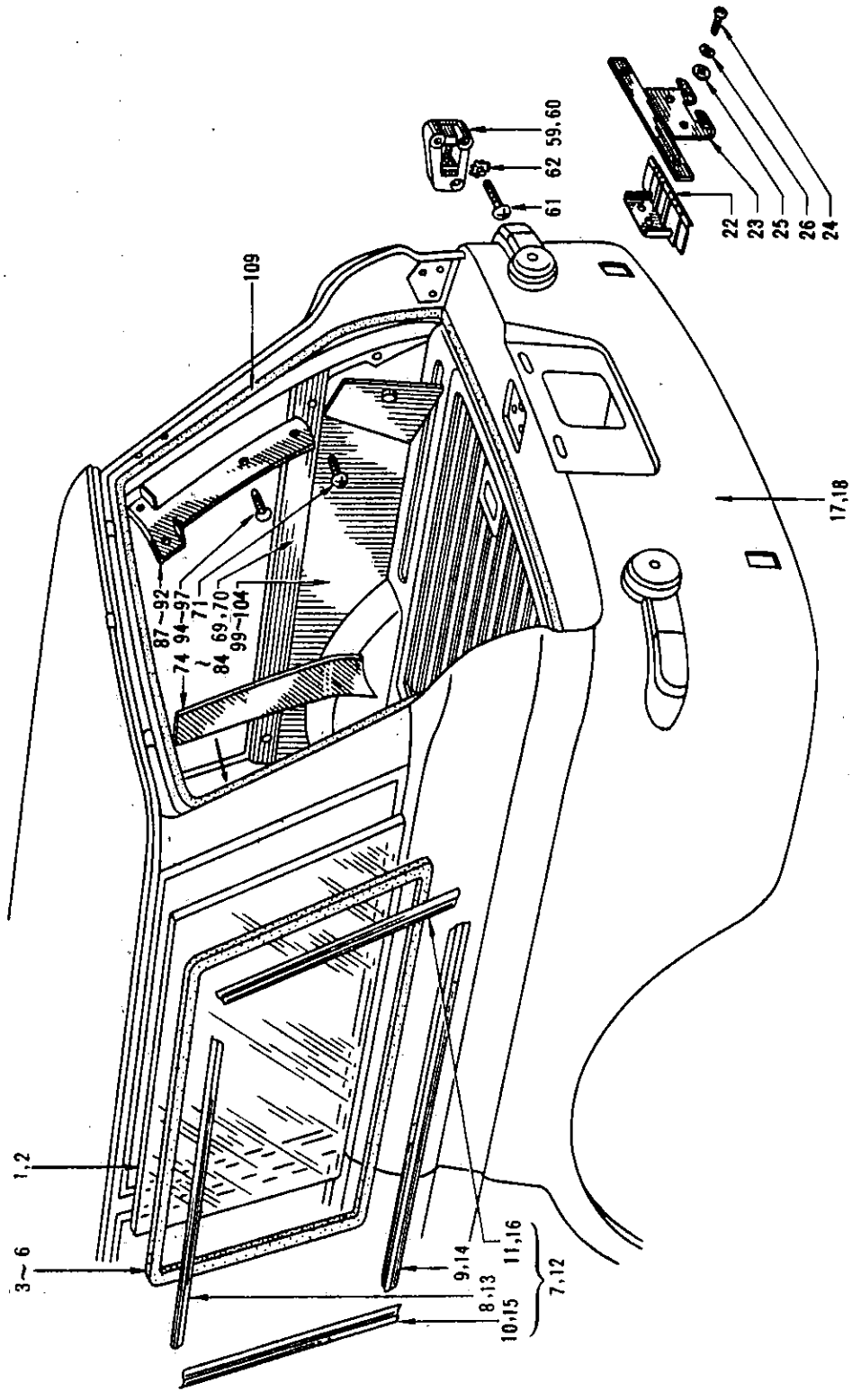

TAIL GATE TRIMMING & SIDE WINDOW

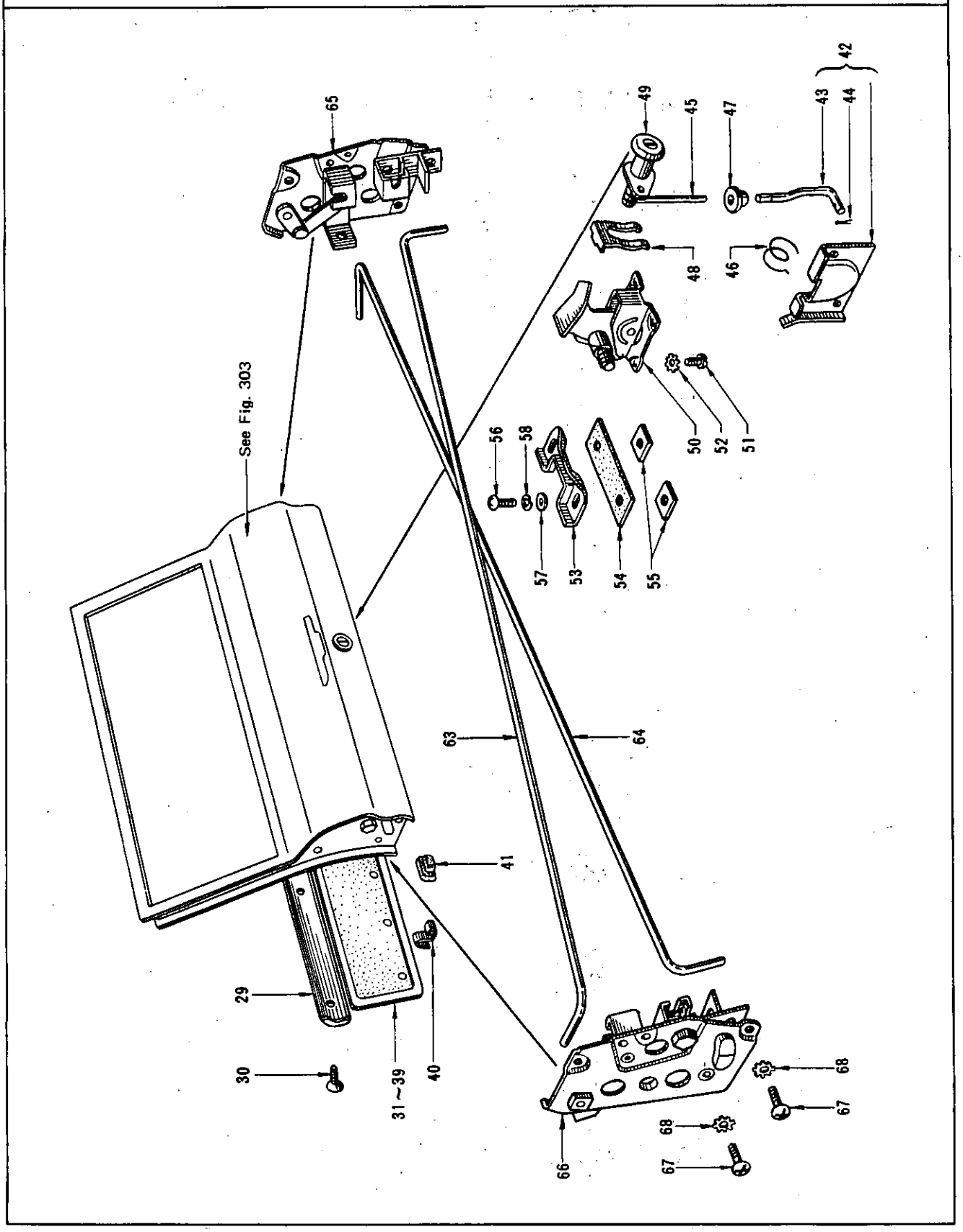

S	KEY NO.	PART NO.	PART NAME	Q'TY	SALES UNIT	MODEL	ICA
			TAIL GATE TRIMMING & SIDE WINDOW				
*	1	76806-11000	GLASS-SIDE WINDOW(TOUGHENED)	2		WAGON 411	
*	2	76806-11001	GLASS-SIDE WINDOW(TOUGHENED ANTI-SUN)	2		WAGON 411	
*	3	76807-10900	WEATHERSTRIP-SIDE WINDOW(R.H.)	1	1	WAGON 411	
	4	76807-10901	WEATHERSTRIP-SIDE WINDOW(R.H.)	1	2	WAGON 411	Y
	5	76808-10900	WEATHERSTRIP-SIDE WINDOW(L.H.)	1	1	WAGON 411	
	6	76808-10901	WEATHERSTRIP-SIDE WINDOW(L.H.)	1	1	WAGON 411	Y
	7	76809-10900	SET-MOULDING,SIDE WINDOW(R.H.)	1		WAGON 411(EXC.A TYPE)	
	8	76811-10900	MOULDING-SIDE WINDOW,UPPER(R.H.)	1		WAGON 411(EXC.A TYPE)	
	9	76813-10900	MOULDING-SIDE WINDOW,LOWER(R.H.)	1	1	WAGON 411(EXC.A TYPE)	
	10	76815-10900	MOULDING-SIDE WINDOW,FRONT(R.H.)	1	1	WAGON 411(EXC.A TYPE)	
	11	76817-10900	MOULDING-SIDE WINDOW,REAR(R.H.)	1	10	WAGON 411(EXC.A TYPE)	
	12	76810-10900	SET-MOULDING,SIDE WINDOW(L.H.)	1		WAGON 411(EXC.A TYPE)	
	13	76812-10900	MOULDING-SIDE WINDOW,UPPER(L.H.)	1		WAGON 411(EXC.A TYPE)	

Printed in Japan

REVISED: SEPTEMBER,1968

S	KEY NO.	PART NO.	PART NAME	Q'TY	SALES UNIT	MODEL	ICA
	14	76814-10900	MOULDING-SIDE WINDOW,LOWER(L.H.)	1	1	WAGON 411(EXC.A TYPE)	
	15	76816-10900	MOULDING-SIDE WINDOW,FRONT(L.H.)	1		WAGON 411(EXC.A TYPE)	
	16	76818-10900	MOULDING-SIDE WINDOW,REAR(L.H.)	1	1	WAGON 411(EXC.A TYPE)	
	17	79100-10930	ASSY-PANEL,REAR(TO MAR-66)	1		WAGON 411	
	18	79100-19600	ASSY-PANEL.REAR(FROM APR.-'66)	1	1	WAGON 411	N
	19	66524-58000	CLIP-B	4	5	WAGON 411	
	20	24197-01700	CLIP-WIRE HARNESS	2	1	WAGON 411	
	21	96234-10901	ASSY-BRACKET,LICENCE PLATE LOCK	1	1	WAGON 411	
	22	96220-10900	ASSY-HINGE,LICENCE PLATE BRACKET	1	1	WAGON 411	
	23	96205-10900	ASSY-BRACKET,LICENCE PLATE	1	1	WAGON 411	
	24	00314-41610	SCREW	2	50	WAGON 411	
	25	00915-41410	WASHER-PLAIN	2		WAGON 411	
	26	00915-11410	WASHER-LOCK	2		WAGON 411	
	27	66174-01500	RUBBER-PLUG HOLE	2		WAGON 411	
	28	24256-10600	GROMMET-RUBBER(FIXED TO REAR APRON)	1	10	WAGON 411	
*	29	90913-10900	GARNISH-TAIL GATE	1	1	WAGON 411	
	30	00530-40710	SCREW	3		WAGON 411	
*	31	90901-10900	ASSY-TRIMMING,TAIL GATE(RED)	1	1	411(EXC.U.S.A.)	
*	32	90901-10901	ASSY-TRIMMING,TAIL GATE(BLUE)	1	1	411(EXC.U.S.A.)	

REVISED: SEPTEMBER, 1966

Printed in Japan

S	KEY NO.	PART NO.	PART NAME	Q'TY	SALES UNIT	MODEL	ICA
	33	90901-10903	ASSY-TRIMMING,TAIL GATE(BROWN)	1	1	411(EXC.U.S.A.)	
	34	90901-10906	ASSY-TRIM,TAIL GATE(RED)(FROM OCT.-'66)	1	1	411(EXC.U.S.A.)	
	35	90901-10907	ASSY-TRIM,TAIL GATE(BLUE)(FROM OCT.-'66)	1	1	411(EXC.U.S.A.)	
	36	90901-10908	ASSY-TRIM,TAIL GATE(BROWN)(FROM OCT.-'66)	1	1	411(EXC.U.S.A.)	
	37	90901-10909	ASSY-TRIM,TAIL GATE(GREEN)(FROM OCT.-'66)	1		411(EXC.U.S.A.)	
	38	90901-11001	ASSY-TRIM,TAIL GATE(RICH BLACK)(FROM OCT.-'66)	1	1	411(U.S.A.)	
	39	90901-17500	ASSY-TRIM,TAIL GATE(RICH RED)(FROM OCT.-'66)	1	1	411(EXC.U.S.A.)	
	40	80919-32200	CLIP-TRIM PAD	12	10	411	
	41	76916-00100	PLUG	2	1	411	
	42	79106-10900	ASSY-STRIKER,REINFORCEMENT	2	1	WAGON 411	
	43	96239-10900	ELBOW	1	5	WAGON 411	
	44	00921-01010	PIN-COTTER	1		WAGON 411	
	45	96236-10900	ROD	1		WAGON 411	
*	46	96238-10900	SPRING	1	1	WAGON 411	
	47	96240-10900	NUT	1		WAGON 411	
	48	80590-10601	CLIP-RETAINING,CYLINDER LOCK	1	10	WAGON 411	
	49	96807-10900	ASSY-CYLINDER,TAIL GATE LOCK	1	1	WAGON 411	
	50	90502-10900	ASSY-LOCK,TAIL GATE	1	1	WAGON 411	
	51	00324-01210	SCREW	4	50	WAGON 411	
	52	00916-41010	WASHER-TOOTH	4		WAGON 411	
	53	90805-10900	STRIKER-TAIL GATE LOCK	1	1	WAGON 411	

Printed in Japan

REVISED: SEPTEMBER,1968

S	KEY NO.	PART NO.	PART NAME	Q'TY	SALES UNIT	MODEL	ICA
	54	90803-10900	PLATE-FRICTION,TAIL GATE STRIKER	1	10	WAGON 411	
	55	90804-10930	SHIM-ADJUSTING,TAIL GATE STRIKER	2	10	WAGON 411	
	56	00314-41610	SCREW	2	50	WAGON 411	
	57	00915-41410	WASHER-PLAIN	2		WAGON 411	
	58	00915-11410	WASHER-LOCK	2		WAGON 411	
	59	90622-10900	ASSY-STRIKER(R.H.)	1	2	WAGON 411	
	60	90623-10900	ASSY-STRIKER(L.H.)	1	5	WAGON 411	
	61	00324-42000	SCREW	6		WAGON 411	
	62	00916-11410	WASHER-LOCK	6	50	WAGON 411	
	63	90411-10900	BAR-TORSION,TAIL GATE(R.H.)	1	1	WAGON 411	
	64	90412-10900	BAR-TORSION,TAIL GATE(L.H.)	1	1	WAGON 411	
*	65	90430-10900	ASSY-BASE,TAIL GATE STAY(R.H.)	1		WAGON 411	
*	66	90431-10900	ASSY-BASE,TAIL GATE STAY(L.H.)	1		WAGON 411	
	67	00324-41210	SCREW	6	100	WAGON 411	
	68	00916-41410	WASHER-TOOTH LOCK	6		WAGON 411	
	69	76820-10901	GARNISH-REAR WINDOW(R.H.)	1		WAGON 411	
	70	76821-10901	GARNISH-REAR WINDOW(L.H.)	1		WAGON 411	
	71	00530-61020	SCREW	4	50	WAGON 411	
	72	76813-11000	MOULDING-SIDE WINDOW LOWER(R.H.)	1	1	WAGON(A TYPE)411	
	73	76814-11000	MOULDING-SIDE WINDOW LOWER(L.H.)	1		WAGON(A TYPE)411	
	74	76690-10900	MOULDING-GARNISH,REAR PILLAR(RED)R.H.	1	1	WAGON 411	

REVISED: SEPTEMBER,1968

Printed in Japan

S	KEY NO.	PART NO.	PART NAME	Q'TY	SALES UNIT	MODEL	ICA
	75	76690-10901	MOULDING-GARNISH,REAR PILLAR(BLUE)R.H.	1	1	WAGON 411	
	76	76690-10902	MOULDING-GARNISH,REAR PILLAR(GREEN)R.H.	1		WAGON 411	
	77	76690-10903	MOULDING-GARNISH,REAR PILLAR(GRAY)(R.H.)	1	1	WAGON 411	N
	78	76690-17400	MOULDING-GARNISH,REAR PILLAR(GRAY)(R.H.)(FROM C/# WP411-8041598_PL411-801240)	1	1	WAGON 411	Y
	79	76690-19600	MOULDING-GARNISH,REAR PILLAR(FROM JULY-'67)	1	1	WAGON 411	N
	80	76691-10900	MOULDING-GARNISH,REAR PILLAR(RED)L.H.	1	1	WAGON 411	
	81	76691-10901	MOULDING-GARNISH,REAR PILLAR(BLUE)L.H.	1	1	WAGON 411	
	82	76691-10902	MOULDING-GARNISH,REAR PILLAR(GREEN)L.H.	1		WAGON 411	
	83	76691-10903	MOULDING-GARNISH,REAR PILLAR(GRAY)(L.H.)	1	1	WAGON 411	N
	84	76691-17400	MOULDING-GARNISH,REAR PILLAR(GRAY)(L.H.)(FROM C/# WP411-8041598_PL411-801240)	1	1	WAGON 411	Y
	85	76691-19600	MOULDING-GARNISH,REAR PILLAR(FROM JULY-'67)	1	1	WAGON 411	N
	86	73918-10601	FASTENER-GARNISH MOULDING	32	1	WAGON 411	
	87	76290-10903	MOULDING-GARNISH,TAIL PILLAR(GREEN)	1	1	WAGON 411	
	88	76920-17400	MOULDING-GARNISH,TAIL PILLAR(GREEN)(FROM C/# WP411-8041598_&6411-801240)	1		WAGON 411	Y
	89	76290-19600	MOULDING-GARNISH,TAIL PILLAR(GREEN)(FROM JULY-'67)	1		WAGON 411	N

Printed in Japan

REVISED: SEPTEMBER,1968

S	KEY NO.	PART NO.	PART NAME	Q'TY	SALES UNIT	MODEL	ICA
	90	76291-10903	MOULDING-GARNISH,TAIL PILLAR(GREEN)	1	1	WAGON 411	Y
	91	76291-17400	MOULDING-GARNISH,TAIL PILLAR(GREEN)(FROM C/# WP411-8041598-&6411-801240)	1	1	WAGON 411	N
	92	76291-19600	MOULDING-GARNISH,TAIL PILLAR(FROM JULY-'67)	1		WAGON 411	
	93	00530-61320	SCREW	7	50	WAGON 411	
	94	00530-61010	SCREW	9	50	WAGON 411	
	95	00520-61010	SCREW	2		WAGON 411	
	96	00530-61320	SCREW	7	50	SEDAN 411	
	97	00530-61020	SCREW	4	50	SEDAN 411	
	98	80999-11100	WASHER-TRIM	5		WAGON 411	
	99	76901-10903	ASSY-TRIM,BODY SIDE(RED)R.H.	1	1	WAGON 411	
	100	76901-10904	ASSY-TRIM,BODY SIDE(BLUE)R.H.	1	1	WAGON 411	
	101	76901-11000	ASSY-TRIM,BODY SIDE(GREEN)R.H.	1	1	WAGON 411	
	102	76902-10903	ASSY-TRIM,BODY SIDE(RED)L.H.	1		WAGON 411	
	103	76902-10904	ASSY-TRIM,BODY SIDE(BLUE)L.H.	1	1	WAGON 411	
	104	76902-11000	ASSY-TRIM,BODY SIDE(GREEN)L.H.	1	1	WAGON 411	
	105	76911-10900	BOLT	2	1	WAGON 411	
	106	00915-51520	WASHER-PLAIN	2		WAGON 411	
	107	76912-10900	SPRING-FINISH,REAR INSIDE	2		WAGON 411	
	108	80919-32200	CLIP-DOOR FINISH	4	10	WAGON 411	
	109	76805-10903	WEATHERSTRIP-TAIL GATE	1		WAGON 411	

REVISED: SEPTEMBER,1968

Printed in Japan

NOTE

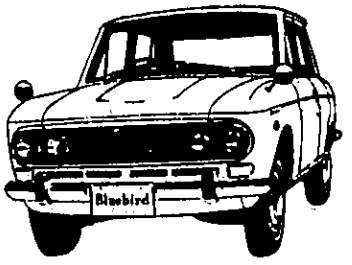

NOTE

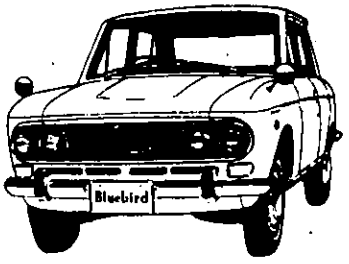

AUXILIARY FLOOR (WAGON)

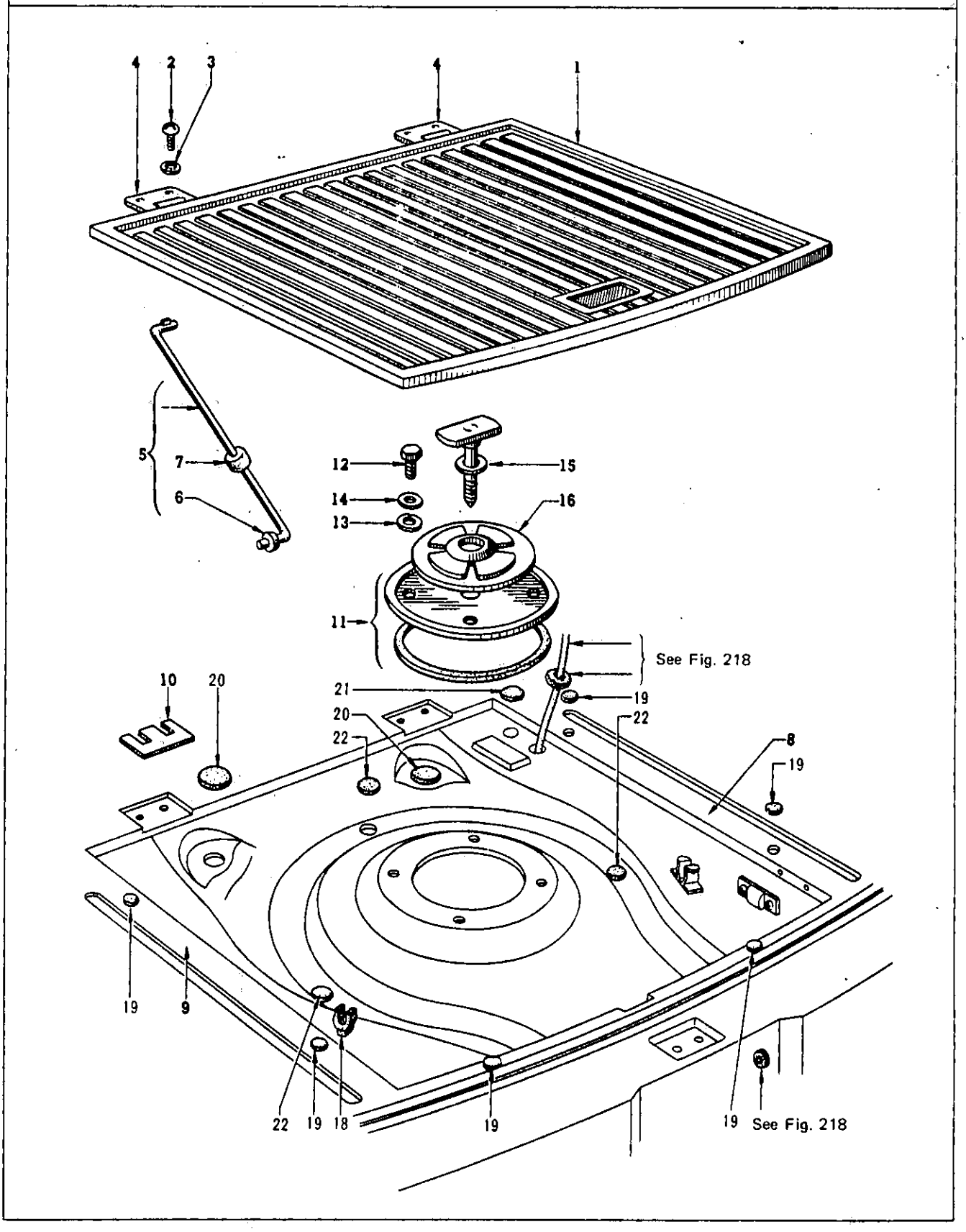

S	KEY NO.	PART NO.	PART NAME	Q'TY	SALES UNIT	MODEL	ICA
			AUXILIARY FLOOR (WAGON)				
	1	74950-10901	ASSY-PANEL,AUXILIARY FLOOR	1		WAGON 411	
	2	00324-41610	SCREW	4	50	WAGON 411	
	3	00916-41410	WASHER	4		WAGON 411	
	4	74986-10900	ASSY-HINGE,AUXILIARY FLOOR	2		WAGON 411	
	5	74990-10900	ASSY-STAY,AUXILIARY FLOOR	1	1	WAGON 411	
	6	74992-10900	WASHER-SPECIAL	1	1	WAGON 411	
	7	74993-10900	BUMPER-RUBBER	1	10	WAGON 411	
	8	74970-10900	ASSY-FLOOR,AUXILIARY(R.H.)	1		WAGON 411	
	9	74971-10900	ASSY-FLOOR,AUXILIARY(L.H.)	1		WAGON 411	
	10	74968-10900	SHIM-ADJUSTING,AUXILIARY FLOOR	2		WAGON 411	
	11	74927-10900	ASSY-COVER,INSPECTION HOLE	1		WAGON 411	
	12	00114-52010	BOLT TO FIX INSPECTION HOLE COVER	4		WAGON 411	
	13	00915-11510	WASHER-LOCK TO FIX INSPECTION HOLE COVER	4		WAGON 411	
	14	00915-41510	WASHER-PLAIN TO FIX INSPECTION HOLE COVER	4		WAGON 411	
	15	57210-10901	ASSY-CLAMP	1		WAGON 411	
	16	57216-10600	ASSY-CLAMP,SPARE TIRE	1	10	WAGON 411	
	17	57216-24000	ASSY-CLAMP,SPARE TIRE(C/# WP411-823545,WPL411-803078,_£6411-82237)	1	5	WAGON 411	N

Printed in Japan

REVISED: SEPTEMBER,1968

S	KEY NO.	PART NO.	PART NAME	Q'TY	SALES UNIT	MODEL	ICA
	18	99611-08400	HOLDER-JACK HANDLE	1	5	WAGON 411	
	19	93438-26260	GROMMET-BUMPER	6	5	WAGON 411	
	20	74720-03200	GROMMET-BUMPER	2	5	WAGON 411	
	21	74942-10900	PLUG	1		WAGON 411	
	22	86350-00100	GROMMET-RUBBER	3	5	WAGON 411	

Printed in Japan

REVISED: SEPTEMBER,1968

NOTE

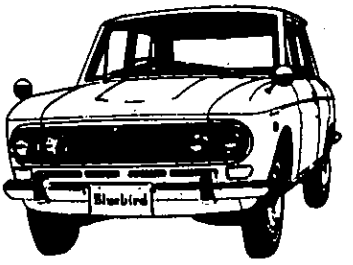

BODY PANELS

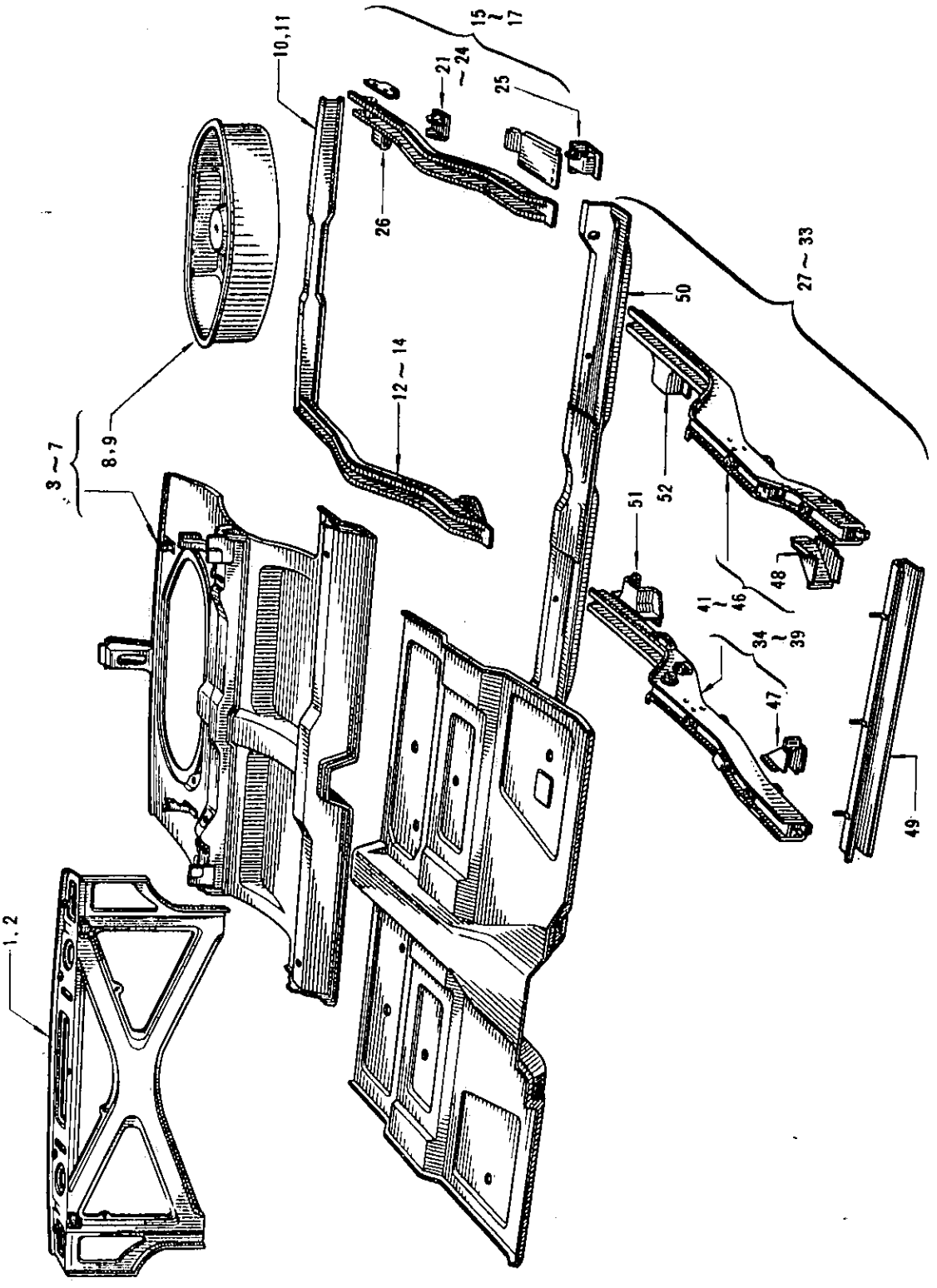
1, 2
3 ~ 7
8, 9
10, 11
12 ~ 14
15 ~ 17
21 ~ 24
25
26
27 ~ 33
34 ~ 39
41 ~ 46
47
48
49
50
51
52

BODY PANELS

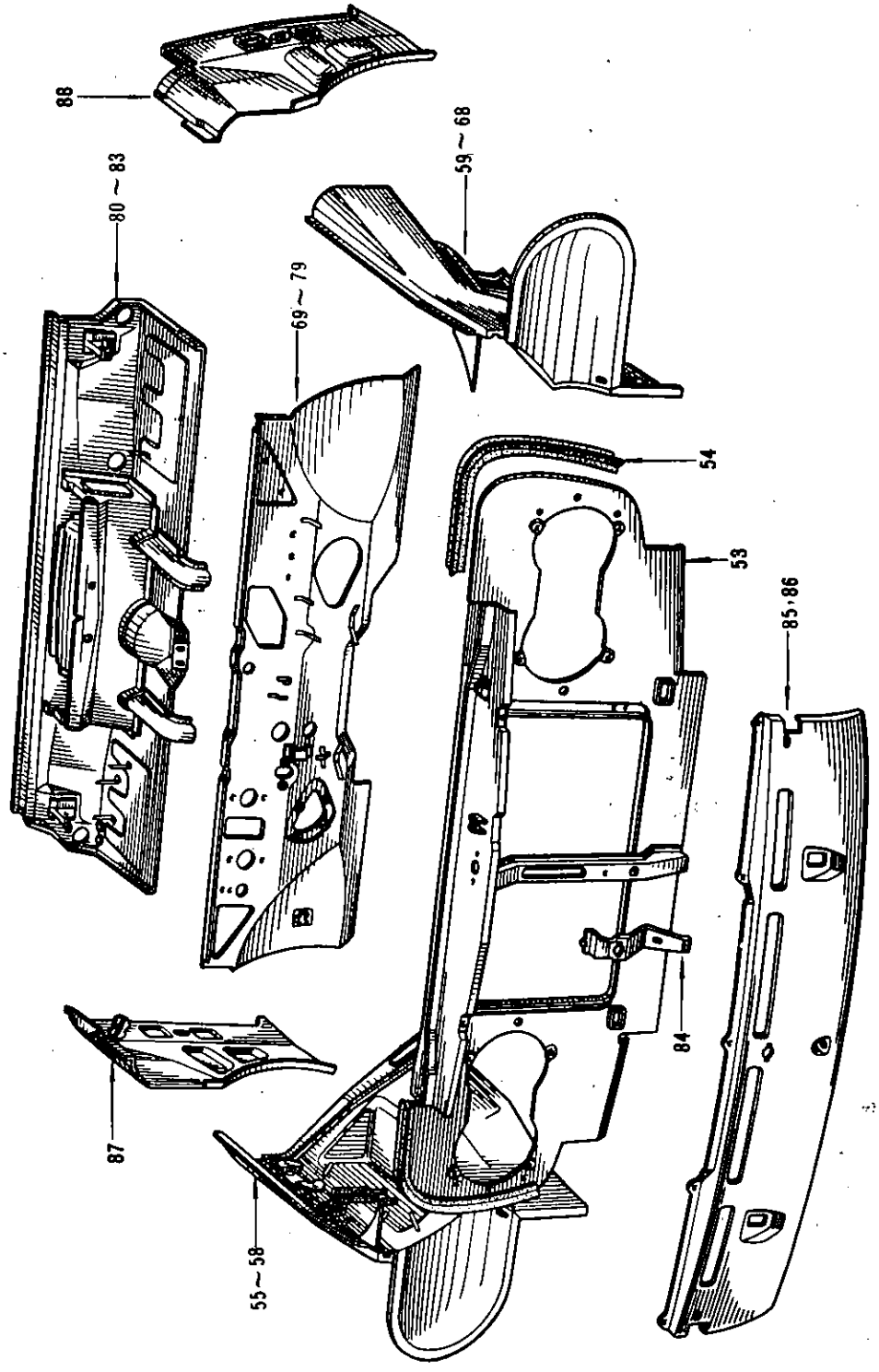

SEPTEMBER, 1968

Printed in Japan

BODY PANELS

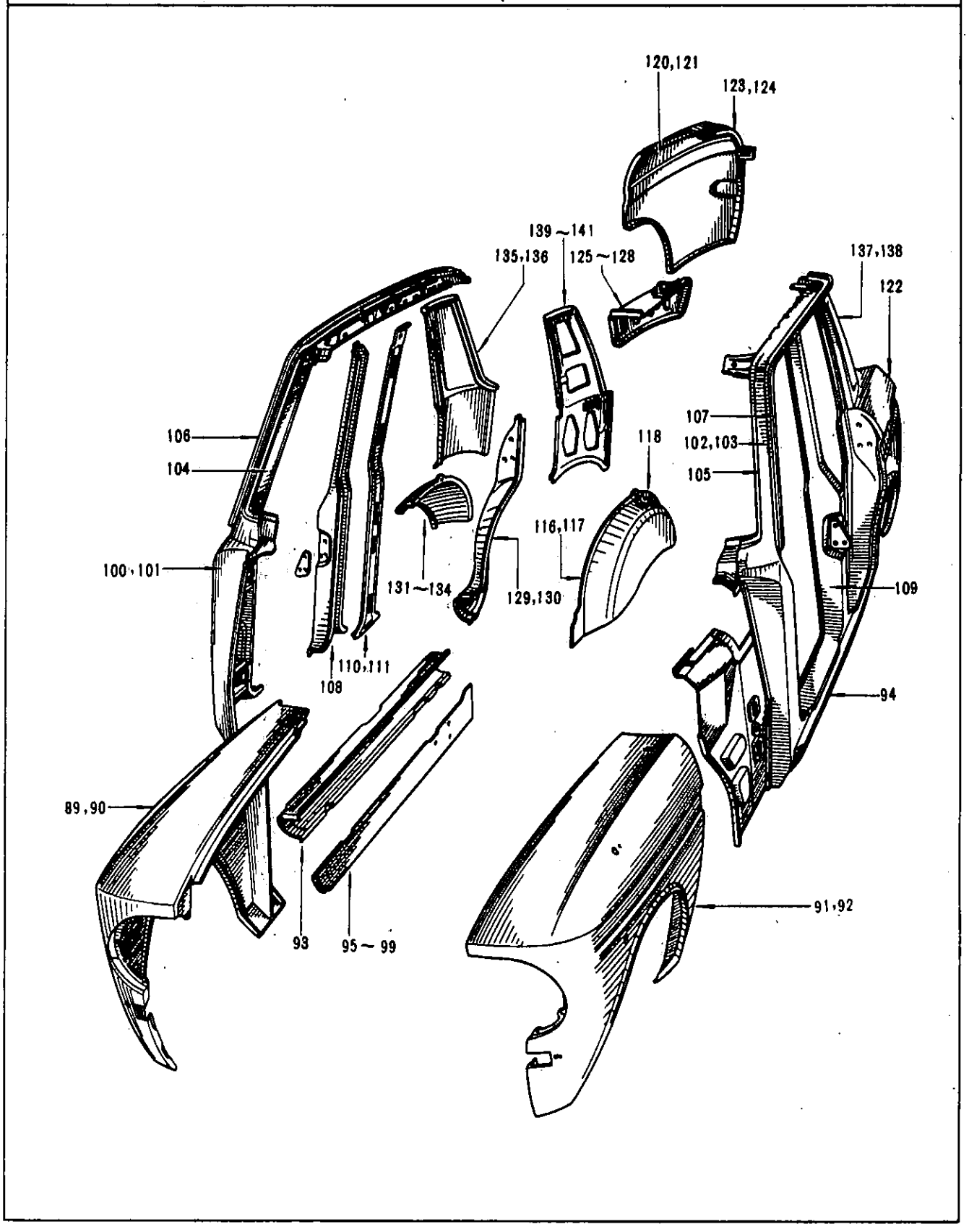
120,121
123,124
139~141
135,136
125~128
137,138
122
106
104
107
102,103
105
118
116,117
100,101
131~134
129,130
109
110,111
108
94
89,90
91,92
93
95~99

BODY PANELS

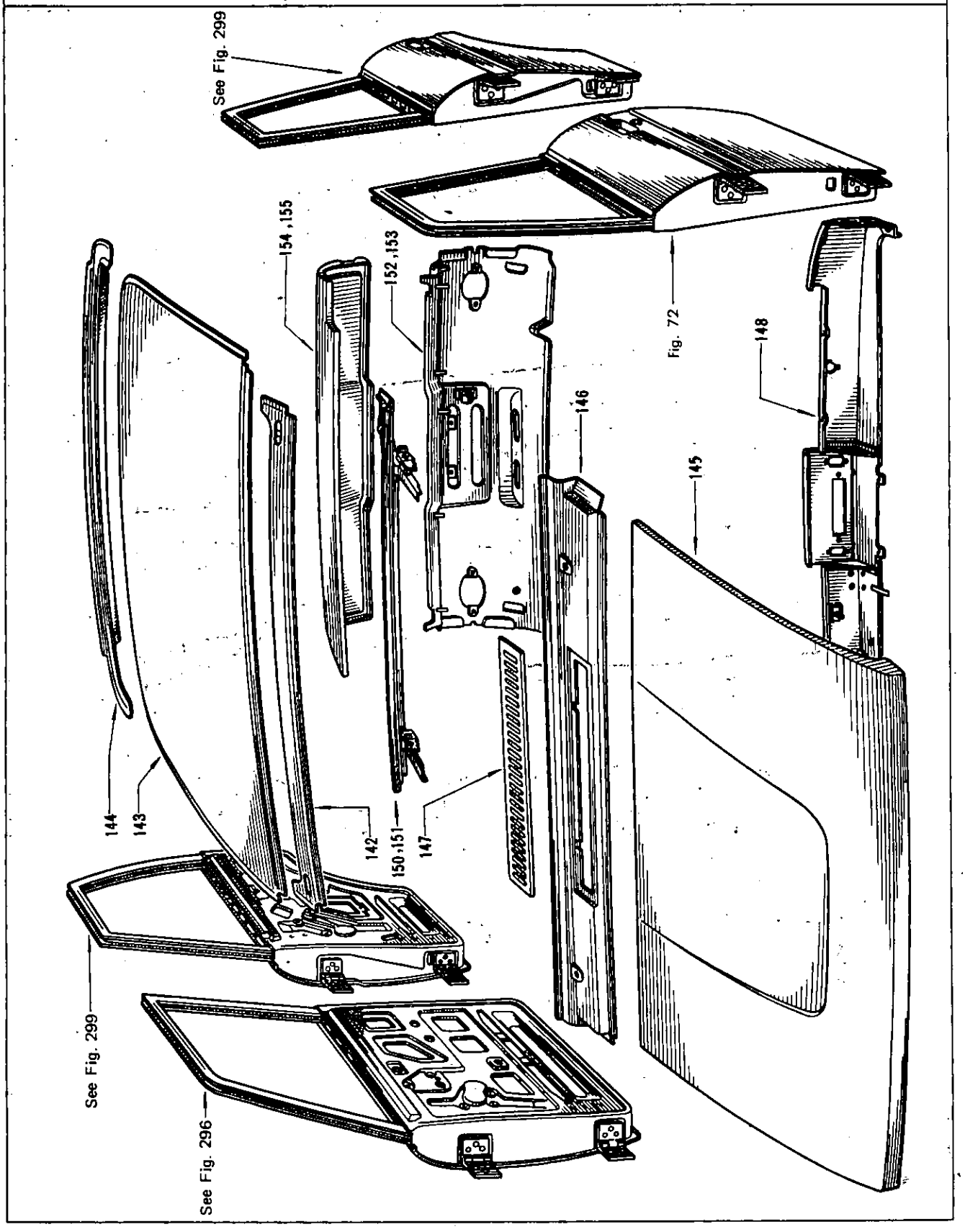
See Fig. 299
154,155
152,153
Fig. 72
148
146
145
144
143
142
150,151
147
See Fig. 299
See Fig. 296

BODY PANELS

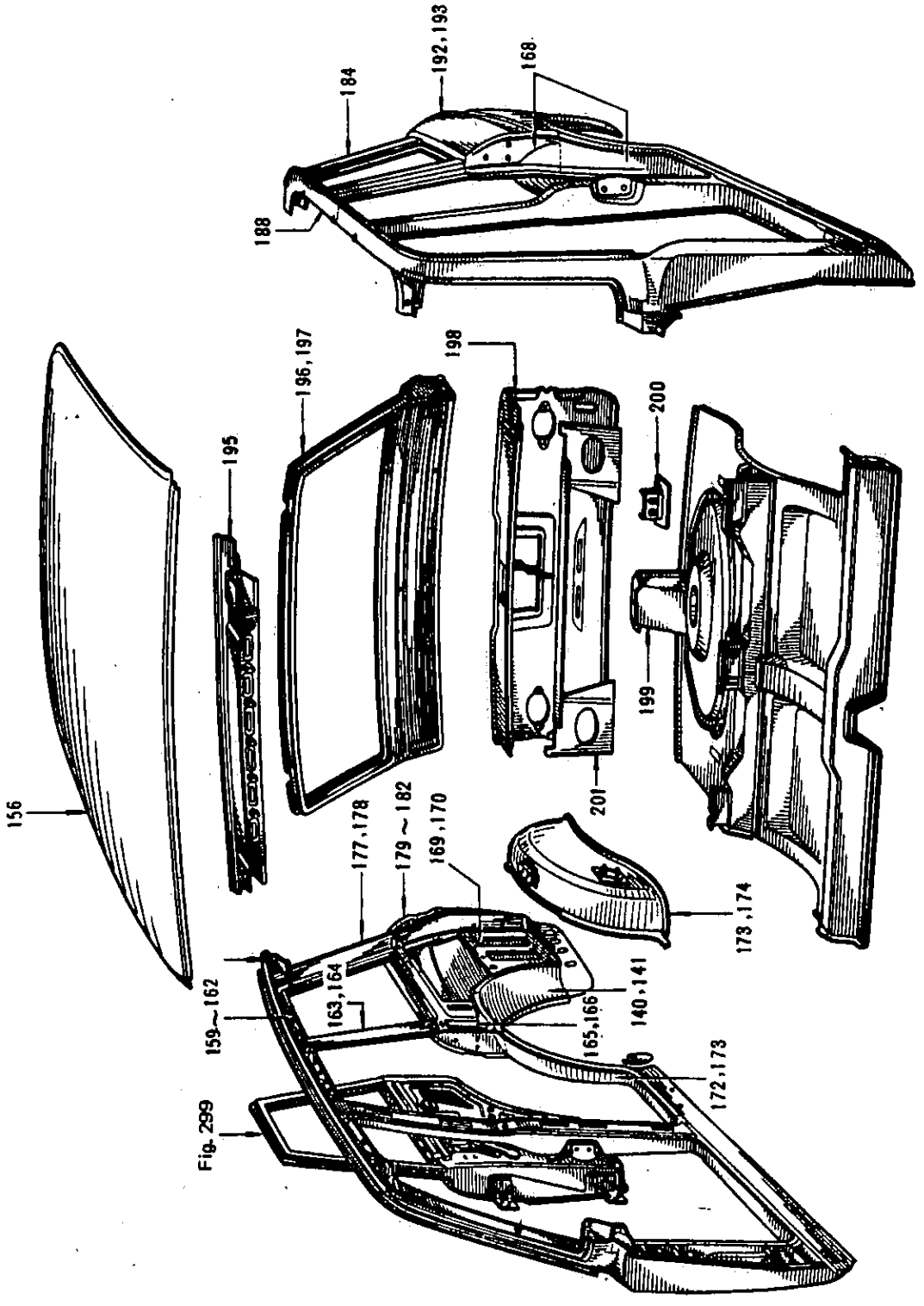
184
192,193
168
188
196,197
198
200
195
199
201
156
177,178
179～182
169,170
173,174
163,164
159～162
165,166
140,141
172,173
Fig. 299

S	KEY NO.	PART NO.	PART NAME	Q'TY	SALES UNIT	MODEL	ICA
			BODY PANELS				
	1	79402-10600	ASSY-PANEL,REAR SEAT BACK(TO MAR-66)	1	1	SEDAN 411	
	2	79402-18400	ASSY-PANEL,REAR SEAT BACK(FROM APR.-'66)	1		SEDAN 411	N
	3	74500-16530	ASSY-PANEL,REAR FLOOR(TO MAR-66)	1		SEDAN,R DRIVE 411	
*	4	74500-18430	ASSY-PANEL,REAR FLOOR(FROM APR.-'66)	1	1	SEDAN,R DRIVE 411	N
	5	74500-17030	ASSY-PANEL,REAR FLOOR(TO MAR-66)	1	1	SEDAN,L DRIVE 411 (EXC.FINLAND)	
*	6	74500-18730	ASSY-PANEL,REAR FLOOR(FROM APR.-'66)	1	1	SEDAN,L DRIVE 411 (EXC.FINLAND)	N
	7	74500-18731	ASSY-PANEL,REAR FLOOR(FROM APR.-'66)	1	1	411 FINLAND	
	8	74507-16530	ASSY-PANEL,SPARE WHEEL HOUSE(TO MAR-66)	1	1	SEDAN 411	
	9	74507-18401	ASSY-PANEL,SPARE WHEEL HOUSE(FROM APR.-'66)	1	1	SEDAN 411	N
	10	74856-10600	MEMBER-CROSS,REAR(TO MAR-66)	1		411	
	11	74856-18400	MEMBER-CROSS,REAR(FROM APR.-'66)	1		411	N
	12	74804-10630	ASSY-MEMBER,SIDE,REAR(R.H.)(TO MAR-66)	1	1	1.3L 411	
*	13	74804-18430	ASSY-MEMBER,SIDE,REAR(R.H.)(FROM APR.-'66)	1	1	1.3L 411	Y
*	14	74804-18830	ASSY-MEMBER,SIDE,REAR(R.H.)(FROM APR.-'66)	1	1	1.6L SEDAN 411	

Printed in Japan

REVISED: SEPTEMBER,1968

S	KEY NO.	PART NO.	PART NAME	Q'TY	SALES UNIT	MODEL	ICA
	15	74805-10630	ASSY-MEMBER,SIDE,REAR(L.H.)(TO MAR-66)	1	1	1.3L 411	
*	16	74805-18430	ASSY-MEMBER,SIDE,REAR(L.H.)(FROM APR.-'66)	1	1	1.3L 411	N
*	17	74805-18830	ASSY-MEMBER,SIDE,REAR(L.H.)(FROM APR.-'66)	1	1	1.6L SEDAN 411	
*	18	74870-10600	ASSY-BRACKET,REAR SPRING BUMPER(R.H.)(TO MAR-66)	1	1	1.3L 411	
	19	74870-18400	ASSY-BRACKET,REAR SPRING BUMPER(R.H.)(FROM APR.-'66)	1	1	1.3L 411	N
	20	74870-18800	ASSY-BRACKET,REAR SPRING BUMPER(R.H.)(FROM APR.-'66)	1	1	1.6L SEDAN 411	
	21	74873-10600	ASSY-BRACKET,REAR SPRING BUMPER(L.H.)	1	1	1.3L 411	
	22	74873-18400	ASSY-BRACKET,REAR SPRING BUMPER(L.H.)(FROM APR.-'66)	1	1	1.3L 411	
	23	74873-18800	ASSY-BRACKET,REAR SPRING BUMPER(L.H.)(FROM APR.-'66)	1	1	1.6L SEDAN 411	
	24	74853-10650	ASSY-BRACKET,REAR SPRING,FRONT(R.H.)	1		ALL 411	
	25	74854-10650	ASSY-BRACKET,REAR SPRING,FRONT(L.H.)	1		ALL 411	
*	26	20641-10600	ASSY-SUPPORT,EXHAUST TUBE	1	100	ALL 411	
	27	74800-16531	ASSY-MEMBER,FRONT	1	1	411 U,WU	
	28	74800-16730	ASSY-MEMBER,FRONT	1	1	411 UT,WUT,UTK	
	29	74800-18830	ASSY-MEMBER,FRONT	1	1	411 R-UTK	
	30	74800-17031	ASSY-MEMBER,FRONT	1	1	411 LU,WLU	
	31	74800-17330	ASSY-MEMBER,FRONT	1	1	411 PLUT,WLUT	

REVISED: SEPTEMBER,1968

Printed in Japan

S	KEY NO.	PART NO.	PART NAME	Q'TY	SALES UNIT	MODEL	ICA
	32	74800-18930	ASSY-MEMBER,FRONT	1		411 RL-UTK ,WRL-UTK	
	33	74800-24530	ASSY-MEMBER,FRONT	1		411 RL-UAK ,WRL-UAK	
	34	74801-16530	ASSY-MEMBER,SIDE,FRONT (R.H.)	1	1	411 U,WU	
	35	74801-16930	ASSY-MEMBER,SIDE,FRONT (R.H.)	1		411 UT,UTK	
	36	74801-18830	ASSY-MEMBER,SIDE,FRONT (R.H.)(FROM APR.-'66)	1		411 RL-UTK WRL-UTK	
	37	74801-17030	ASSY-MEMBER,SIDE,FRONT (R.H.)	1	1	L DRIVE 411 (EXC. 1.6L)	
	38	74801-18930	ASSY-MEMBER,SIDE,FRONT (R.H.)	1		411 RL-UTK ,WRL-UTK	
*	39	74801-24530	ASSY-MEMBER,SIDE,FRONT (R.H.)	1	1	411 RL-UAK ,WRL-LAK	
	40	74802-16530	ASSY-MEMBER,SIDE,FRONT (L.H.)	1	1	411 U,WU	
*	41	74802-16730	ASSY-MEMBER,SIDE,FRONT (L.H.)	1	1	411 UT,UTK	
	42	74802-18830	ASSY-MEMBER,SIDE,FRONT (L.H.)(FROM APR.-'66)	1		411 R-UTK, WRL-UTK	
	43	74802-17030	ASSY-MEMBER,SIDE,FRONT (L.H.)	1	1	411 LU,WLU (EXC.LUT)	
	44	74802-17330	ASSY-MEMBER,SIDE,FRONT (L.H.)	1		411 LUT	
	45	74802-18930	ASSY-MEMBER,SIDE,FRONT	1		411 RL-UTK ,WRL-UTK	
	46	74802-24530	ASSY-MEMBER,SIDE,FRONT	1	1	411 RL-UAK ,WRL-UAK	
	47	74835-10600	BRACE(R.H.)	1	1	411	
	48	74836-10600	BRACE(L.H.)	1	1	411	
	49	74860-10600	ASSY-MEMBER,CROSS,1ST	1	1	411	

Printed in Japan

REVISED: SEPTEMBER,1968

S	KEY NO.	PART NO.	PART NAME	QTY	SALES UNIT	MODEL	ICA
	50	74320-16530	ASSY-MEMBER,CROSS,2ND	1	1	411	
	51	74890-10600	ASSY-BRACKET,ENGINE SUPPORT(R.H.)	1	1	411	
	52	74891-10600	ASSY-BRACKET,ENGINE SUPPORT(L.H.)	1	1	411	
	53	62500-16530	ASSY-PANEL,FRONT	1	1	411	
•	54	62811-10600	RUBBER-SEALING	1	2	411	
	55	64100-16530	ASSY-PANEL,HOOD LEDGE(R.H.)	1	1	411 UTK	
	56	64100-16930	ASSY-PANEL,HOOD LEDGE(R.H.)	1	1	R DRIVE 411 (EXC. UTK)	
	57	64100-17030	ASSY-PANEL,HOOD LEDGE(R.H.)	1	1	L DRIVE 411 (EXC. 1.6L)	
	58	64100-24500	ASSY-PANEL,HOOD LEDGE(R.H.)	1	1	1.6L 411	
	59	64101-16530	ASSY-PANEL,HOOD LEDGE(L.H.)(TO MAR-66)	1	1	R DRIVE 411 (EXC. UTK)	
	60	64101-18400	ASSY-PANEL,HOOD LEDGE(L.H.)(FROM APR.-'66)	1	1	R DRIVE 411 (EXC. UTK)	Y
	61	64101-16730	ASSY-PANEL,HOOD LEDGE(L.H.)(TO MAR-66)	1	1	411 UTK	
	62	64101-19400	ASSY-PANEL,HOOD LEDGE(L.H.)(FROM APR.-'66)	1	1	411 UTK	Y
	63	64101-15830	ASSY-PANEL,HOOD LEDGE(L.H.)(TO MAR-66)	1	1	1.6L 411	
	64	64101-18800	ASSY-PANEL,HOOD LEDGE(L.H.)(FROM APR.-'66)	1	1	1.6L 411	Y
	65	64101-17030	ASSY-PANEL,HOOD LEDGE(L.H.)(TO MAR-66)	1	1	L DRIVE 411 (EXC. FINLAND)	

Printed in Japan

REVISED: SEPTEMBER,1968

S	KEY NO.	PART NO.	PART NAME	Q'TY	SALES UNIT	MODEL	ICA
	66	64101-18700	ASSY-PANEL,HOOD LEDGE(L.H.)(FROM APR.-'66)	1	1	L DRIVE 411 (EXC. FINLAND)	Y
	67	64101-17130	ASSY-PANEL,HOOD LEDGE(L.H.)(TO MAR-66)	1		411 FINLAN D	
	68	64101-18710	ASSY-PANEL,HOOD LEDGE(L.H.)(FROM APR.-'66)	1	1	411 FINLAN D	Y
	69	67300-16530	ASSY-PANEL,DASH LOWER(TO MAR-66)	1	1	R DRIVE 411 (EXC. UTK)	
	70	67300-18430	ASSY-PANEL,DASH LOWER(FROM APR.-'66 TO SEPT. -'66)	1	1	R DRIVE 411 (EXC. UTK)	N
	71	67300-24030	ASSY-PANEL,DASH LOWER(FROM OCT.-'66)	1		R DRIVE 411 (EXC. UTK)	N
	72	67300-17030	ASSY-PANEL,DASH LOWER(TO MAR-66)	1	1	L DRIVE 411 (EXC. 1.6L)	
	73	67300-18730	ASSY-PANEL,DASH LOWER(FROM APR.-'66 TO SEPT. -'66)	1	1	L DRIVE 411 (EXC. 1.6L)	N
	74	67300-18731	ASSY-PANEL,DASH LOWER(FROM OCT.-'66)	1	1	L DRIVE 411 (EXC. 1.6)	N
	75	67300-16730	ASSY-PANEL,DASH LOWER(TO MAR-66)	1	1	411 UTK	
	76	67300-19430	ASSY-PANEL,DASH LOWER(FROM APR.-'66 TO SPET. -'66)	1	1	411 UTK	N
	77	67300-19431	ASSY-PANEL,DASH LOWER(FROM OCT.-'66)	1	1	411 UTK	N
	78	67300-18931	ASSY-PANEL,DASH LOWER	1	1	411 RL-UTK	
	79	67300-24530	ASSY-PANEL,DASH,LOWER	1	1	411 RL-UAK	
	80	67103-16530	ASSY-PANEL,DASH,UPPER	1	1	R DRIVE 411 (EXC. 1.6L)	

Printed in Japan

REVISED: SEPTEMBER,1968

S	KEY NO.	PART NO.	PART NAME	Q'TY	SALES UNIT	MODEL	ICA
	81	67103-15830	ASSY-PANEL,DASH,UPPER	1	1	1.6 L 411	
	82	67103-17030	ASSY-PANEL,DASH,UPPER	1		L DRIVE 411 (EXC. FINLAND)	
	83	67103-17130	ASSY-PANEL,DASH,UPPER	1	1	411 FINLAND	
	84	62608-10600	PANEL-SUPPORT,STARTING CRANK	1		411	
*	85	62602-13231	ASSY-PANEL,FRONT APRON	1		R DRIVE 411	
	86	62602-13931	ASSY-PANEL,FRONT APRON	1		L DRIVE 411	
	87	66400-13230	ASSY-PANEL,DASH SIDE(R.H.)	1		411	
	88	66401-13230	ASSY-PANEL,DASH SIDE(L.H.)	1		411	
	89	63100-10631	ASSY-FENDER,FRONT(R.H.)	1		R DRIVE 411	
	90	63100-10832	ASSY-FENDER,FRONT(R.H.)	1		L DRIVE 411	
	91	63101-10631	ASSY-FENDER,FRONT(L.H.)	1		R DRIVE 411	
	92	63101-10834	ASSY-FENDER,FRONT(L.H.)	1		L DRIVE 411	
	93	76404-10631	ASSY-BODY,SILL(R.H.)	1		411	
	94	76405-10631	ASSY-BODY,SILL(L.H.)	1		411	
	95	74310-16530	ASSY-PANEL,SILL BODY,INNER(R.H.)	1	1	411 UTK	
	96	74310-15830	ASSY-PANEL,FLOOR SIDE(R.H.)	1	1	1.6 L 411	
	97	74310-17030	ASSY-PANEL,FLOOR SIDE(R.H.)	1	1	1.3 L 411	
	98	74311-16530	ASSY-PANEL,SILL BODY,INNER(L.H.)	1	1	411 UTK	

REVISED: SEPTEMBER,1968

Printed in Japan

S	KEY NO.	PART NO.	PART NAME	Q'TY	SALES UNIT	MODEL	ICA
	99	74311-17030	ASSY-PANEL,FLOOR SIDE(L.H.)	1	1	411	
	100	66103-10631	ASSY-PILLAR,FRONT(R.H.)(TO MAR-66)	1		411	
	101	66103-18430	ASSY-PILLAR,FRONT(R.H.)(FROM APR.-'66)	1	1	411	N
	102	66104-10631	ASSY-PILLAR,FRONT(L.H.)(TO MAR-66)	1		411	
	103	66104-18430	ASSY-PILLAR,FRONT(L.H.)(FROM APR.-'66)	1	1	411	N
	104	76110-10601	PILLAR-WINDSHIELD,INNER(R.H.)	1		411	
	105	76111-10601	PILLAR-WINDSHIELD,INNER(L.H.)	1		411	
	106	73222-10630	RAIL-SIDE,ROOF,OUTER(R.H.)	1	1	411	
*	107	73223-10600	RAIL-SIDE,ROOF,OUTER(L.H.)	1		411	
	108	76500-10631	ASSY-PILLAR,CENTER,OUTSIDE	1		411	
	109	76501-10631	ASSY-PILLAR,CENTER,OUTSIDE(L.H.)	1		411	
*	110	76512-10631	PANEL-CENTER PILLAR,INSIDE(R.H.)	1		411	
	111	76512-19101	PANEL-CENTER PILLAR,INSIDE(R.H.)	1	1	411	Y
	112	76506-10601	ASSY-PEINFORCEMENT,CENTER PILLAR LOWER(R.H.)	1	1	SEDAN 411	
*	113	76513-10631	PANEL-CENTER PILLAR,INSIDE(L.H.)	1		411	
	114	76513-19101	PANEL-CENTER PILLAR,INSIDE(L.H.)	1		411	Y
	115	76507-10601	ASSY-PEINFORCEMENT,CENTER PILLAR,LOWER(L.H.)	1	1	411	

Printed in Japan

REVISED: SEPTEMBER,1968

S	KEY NO.	PART NO.	PART NAME	Q'TY	SALES UNIT	MODEL	ICA
*	116	76752-10630	PANEL-REAR WHEEL HOUSE ,INSIDE(R.H.)	1		SEDAN 411	
*	117	76753-10630	PANEL-REAR WHEEL HOUSE ,INSIDE(L.H.)	1		SEDAN 411	
	118	99565-10600	SUPPORT	1		SEDAN 411	
	119	99567-08100	GROMMET-JACK SEAT	1	10	SEDAN 411	
	120	78100-10630	ASSY-FENDER,REAR(R.H.) (TO MAR-66)	1	1	SEDAN 411	
	121	78100-18430	ASSY-FENDER,REAR(R.H.) (FROM APR.-'66)	1	1	SEDAN 411	N
	122	78101-10630	ASSY-FENDER,REAR(L.H.)	1	1	SEDAN 411	
	123	78104-10600	DRIP-REAR FENDER(R.H.)	1	1	SEDAN 411	
	124	78105-10600	DRIP-REAR FENDER(L.H.)	1	1	SEDAN 411	
	125	76720-10600	ASSY-EXTENSION,REAR WHEEL HOUSE(R.H.)(TO MAR-66)	1	1	SEDAN 411	
	126	76720-18400	ASSY-EXTENSION,REAR WHEEL HOUSE(R.H.)(FROM APR.-'66)	1	1	SEDAN 411	N
	127	76721-10600	ASSY-EXTENSION,REAR WHEEL HOUSE(L.H.)(TO MAR-66)	1	1	SEDAN 411	
	128	76721-18400	ASSY-EXTENSION,REAR WHEEL HOUSE(L.H.)(FROM APR.-'66)	1	1	SEDAN 411	N
*	129	76704-10601	PANEL-REAR WHEEL HOUSE ,OUTER,FRONT(R.H.)	1		SEDAN 411	
*	130	76705-10601	PANEL-REAR WHEEL HOUSE ,OUTER,FRONT(L.H.)	1		SEDAN 411	
	131	76708-10600	PANEL-REAR WHEEL HOUSE ,OUTER,REAR(R.H.)(TO MAR-66)	1	1	SEDAN 411	
	132	76708-18400	PANEL-REAR WHEEL HOUSE ,OUTER,REAR(R.H.)(FROM APR.-'66)	1		SEDAN 411	N

Printed in Japan

REVISED: SEPTEMBER,1968

S	KEY NO.	PART NO.	PART NAME	Q'TY	SALES UNIT	MODEL	ICA
	133	76709-10600	PANEL-REAR WHEEL HOUSE ,OUTER,REAR(L.H.)(TO MAR-66)	1	1	SEDAN 411	
	134	76709-18400	PANEL-REAR WHEEL HOUSE ,OUTER,REAR(L.H.)(FROM APR.-'66)	1	1	SEDAN 411	N
	135	76602-10630	PANEL-REAR CORNER(R.H.)	1		SEDAN 411 (EXC.UTK)	
*	136	76602-12410	PANEL-REAR CORNER(R.H.)	1	1	UTK 411	
	137	76603-10630	PANEL-REAR CORNER(L.H.)	1		SEDAN 411 (EXC.UTK)	
*	138	76603-12410	PANEL-REAR CORNER(L.H.)	1	1	UTK 411	
	139	76610-10600	PANEL-REAR CORNER,INSIDE(R.H.)(TO MAR-66)	1	10	SEDAN 411	
	140	76610-18400	PANEL-REAR CORNER,INSIDE(R.H.)(FROM APR.-'66)	1	1	SEDAN 411	N
	141	76611-18400	PANEL-REAR CORNER,INSIDE(L.H.)(FROM APR.-'66)	1	1	SEDAN 411	N
	142	73210-10600	ASSY-RAIL,ROOF,FRONT	1	1	SEDAN 411	
	143	73102-10630	PANEL-ROOF	1		SEDAN 411	
*	144	79704-10600	ASSY-RAIL,ROOF,REAR	1	1	SEDAN 411	
*	145	65100-10630	ASSY-PANEL,HOOD	1	1	411	
	146	66311-10630	ASSY-PANEL,COWL TOP	1	1	411	
	147	66330-10650	ASSY-GRILLE,COWL TOP	1	1	411	
	148	68100-10630	ASSY-PANEL,INSTRUMENT	1		R DRIVE 411	
*	149	68100-10830	ASSY-PANEL,INSTRUMENT	1		L DRIVE 411	
	150	79110-10630	ASSY-PANEL,REAR WAIST(TO MAR-66)	1		SEDAN 411	

Printed in Japan

REVISED: SEPTEMBER,1968

S	KEY NO.	PART NO.	PART NAME	Q'TY	SALES UNIT	MODEL	ICA
	151	79109-18430	ASSY-PANEL,REAR WAIST(FROM APR.-'66)	1		SEDAN 411	N
*	152	79100-10630	ASSY-PANEL,REAR(TO MAR -66)	1	1	SEDAN 411	
	153	79100-18430	ASSY-PANEL,REAR(FROM A PR.-'66)	1	1	SEDAN 411	N
	154	84300-16530	ASSY-LID,TRUNK(TO MAR- 66)	1		SEDAN 411	
	155	84300-18430	ASSY-LID,TRUNK(FROM AP R.-'66)	1		SEDAN 411	N
	156	73102-10900	PANEL-ROOF	1		WAGON 411	
	157	74500-10902	ASSY-PANEL,REAR FLOOR	1	1	WAGON(EXC. 1.6 L)411	
	158	74500-24650	ASSY-PANEL,REAR FLOOR WITHOUT WHEEL HOUSE	1	1	WAGON(1.6 L)411	
	159	73206-10901	ASSY-RAIL,ROOF,INSIDE, REAR(R.H.)	1		WAGON 411	
	160	73207-10901	ASSY-RAIL,ROOF,INSIDE, REAR(L.H.)	1		WAGON 411	
	161	73205-10901	ASSY-RAIL,ROOF,INSIDE, FRONT(R.H.)	1		WAGON 411	
	162	73209-10901	ASSY-RAIL,ROOF,INSIDE, FRONT(L.H.)	1	1	WAGON 411	
	163	76606-10930	PILLAR-INSIDE,REAR,UPP ER(R.H.)	1	1	WAGON 411	
	164	76607-10930	PILLAR-INSIDE,REAR,UPP ER(L.H.)	1	1	WAGON 411	
	165	76608-10930	PILLAR-INSIDE,REAR,LOW ER(R.H.)	1	1	WAGON 411	
	166	76609-10930	PILLAR-INSIDE,REAR,LOW ER(L.H.)	1		WAGON 411	
	167	76704-10931	ASSY-WHEEL HOUSE,REAR, OUTER,FRONT(R.H.)	1		WAGON 411	
	168	76705-10931	ASSY-WHEEL HOUSE,REAR, OUTER,FRONT(L.H.)	1		WAGON 411	

Printed in Japan

REVISED: SEPTEMBER,1968

S	KEY NO.	PART NO.	PART NAME	Q'TY	SALES UNIT	MODEL	ICA
	169	76349-10930	ASSY-RISER, AUXILIARY FLOOR SIDE (R.H.)	1		WAGON 411	
	170	76350-10930	ASSY-RISER, AUXILIARY FLOOR SIDE (L.H.)	1		WAGON 411	
	171	76704-10931	ASSY-WHEEL HOUSE, REAR OUTER, REAR (R.H.)	1		WAGON 411	
	172	76705-10931	ASSY-WHEEL HOUSE, REAR OUTER, REAR (L.H.)	1		WAGON 411	
	173	76750-10931	ASSY-WHEEL HOUSE, REAR, INNER (R.H.)	1		WAGON 411	
	174	76751-10931	ASSY-WHEEL HOUSE, REAR, INNER (L.H.)	1		WAGON 411	
	175	73226-10930	RAIL-REAR CORNER, OUTER (R.H.)	1		WAGON 411	
	176	73227-10930	RAIL-REAR CORNER, OUTER (L.H.)	1		WAGON 411	
	177	76224-10930	ASSY-PANEL, TAIL PILLAR, INNER (R.H.)	1		WAGON 411	
	178	76225-10930	ASSY-PANEL, TAIL PILLAR, INNER (L.H.)	1		WAGON 411	
	179	76202-10930	ASSY-PILLAR, TAIL, MAIN, LOWER (R.H.) (TO MAR-66)	1		WAGON 411	
	180	76202-19600	ASSY-PILLAR, TAIL, MAIN, LOWER (R.H.) (FROM APR-66)	1		WAGON 411	
	181	76203-10930	ASSY-PILLAR, TAIL, MAIN, LOWER (L.H.) (TO MAR-66)	1		WAGON 411	
	182	76203-19600	ASSY-PILLAR, TAIL, MAIN, LOWER (L.H.) (FROM APR-66)	1		WAGON 411	
	183	76220-10930	PILLAR-TAIL, OUTER (R.H.)	1		WAGON 411	
	184	76221-10930	PILLAR-TAIL, OUTER (L.H.)	1		WAGON 411	
	185	76100-10930	ASSY-PANEL, BODY SIDE (R.H.)	1		WAGON 411	
	186	76101-10930	ASSY-PANEL, BODY SIDE (L.H.)	1		WAGON 411	

Printed in Japan

REVISED: SEPTEMBER, 1968

S	KEY NO.	PART NO.	PART NAME	Q'TY	SALES UNIT	MODEL	ICA
	187	76213-10930	ASSY-RAIL, ROOF SIDE, OUTER, REAR (R.H.)	1		WAGON 411	
	188	76214-10930	ASSY-RAIL, ROOF SIDE, OUTER, REAR (L.H.)	1		WAGON 411	
	189	78100-10930	ASSY-FENDER, REAR (R.H.) (TO MAR-66)	1		WAGON 411	
	190	78100-19600	ASSY-FENDER, REAR (R.H.) (FROM APR-66)	1		WAGON 411 R DRIVE	
	191	78100-19800	ASSY-FENDER, REAR (R.H.) (FROM APR-66)	1		WAGON 411 L DRIVE	
	192	78101-10930	ASSY-FENDER, REAR (L.H.) (TO MAR-66)	1		WAGON 411	
	193	78101-19600	ASSY-FENDER, REAR (L.H.) (FROM APR-66)	1		WAGON 411 R DRIVE	
	194	78101-19800	ASSY-FENDER, REAR (L.H.) (FROM APR-66)	1		WAGON 411 L DRIVE	
	195	73260-10950	ASSY-RAIL, ROOF TAIL	1		WAGON 411	
	196	90101-17490	ASSY-PANEL, TAIL GATE	1		WAGON 411	
	197	90101-19690	ASSY-PANEL, TAIL GATE (FROM APR-66)	1		WAGON 411	
	198	79101-10930	ASSY-PANEL, REAR	1		WAGON 411	
	199	17270-10950	ASSY-COVER, FILLER NECK	1		WAGON 411	
	200	96220-10900	ASSY-HINGE, LICENCE PLATE LOCK	1		WAGON 411	
	201	79110-10930	ASSY-RAINFORCEMENT, BRACE, REAR PANEL	1		WAGON 411	
	202	76720-10900	ASSY-EXTENSION, REAR WHEEL HOUSE (R.H.)	1		WAGON 411	
	203	76721-10600	ASSY-EXTENSION, REAR WHEEL HOUSE (L.H.)	1		WAGON 411	

REVISED: SEPTEMBER, 1968

Printed in Japan

S	KEY NO.	PART NO.	PART NAME	Q'TY	SALES UNIT	MODEL	ICA
	204	96901-18700	PLATE-MODEL NO. (ENGLISH)	1		L DRIVE 411 (EXC.1.6L)	
	205	96901-18701	PLATE-MODEL NO. (SPANISH)	1		L DRIVE 411 (EXC.1.6L)	
	206	96901-18900	PLATE-MODEL NO. (ENGLISH)	1		1.6 L 411	
	207	96901-18901	PLATE-MODEL NO. (SPANISH)				
	208	96901-19100	PLATE-MODEL NO. (ENGLISH)	1		R DRIVE 411 (EXC.UTK)	
	209	96901-19101	PLATE-MODEL NO. (ENGLISH)	1		411 UTK	

REVISED: SEPTEMBER, 1968

Printed in Japan

NOTE

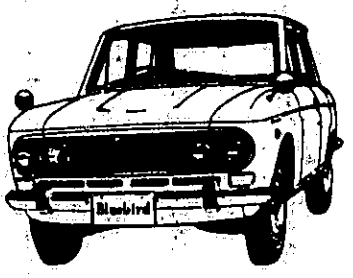

NOTE

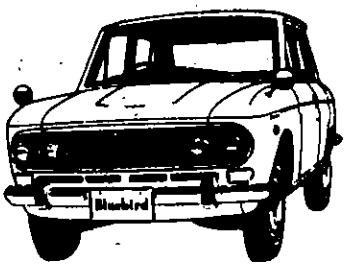

FRONT SEAT (BENCH)

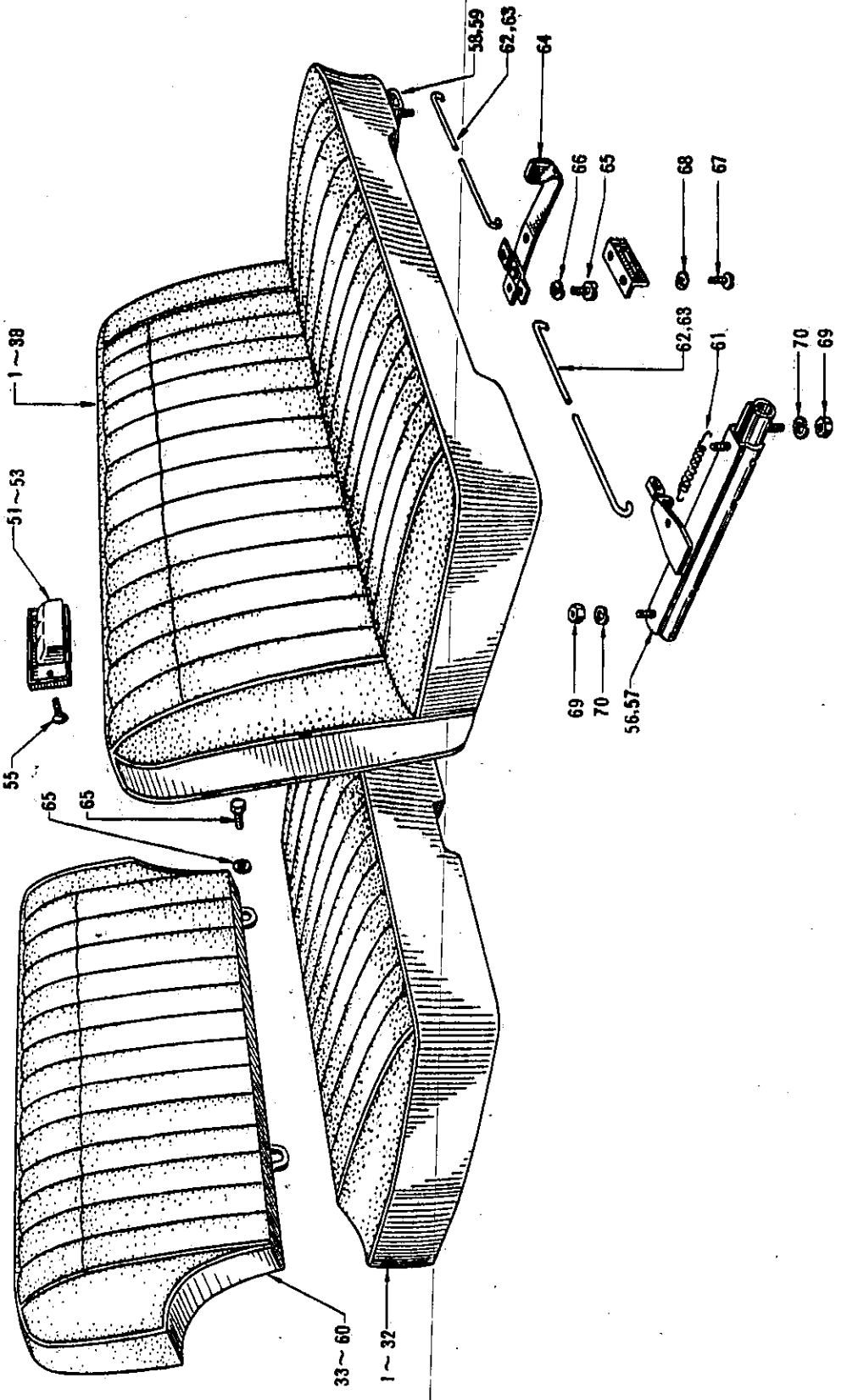

S	KEY NO.	PART NO.	PART NAME	Q'TY	SALES UNIT	MODEL	ICA
			FRONT SEAT (BENCH)				
	1	86000-16910	ASSY-SEAT,FRONT(RED)	1		SEDAN(A,B TYPE)411	
	2	86000-16916	ASSY-SEAT,FRONT(RED)(TO SEP.-'66)	1		SEDAN(A,B TYPE)411	Y
	3	86000-19100	ASSY-SEAT,FRONT(RED)(FROM OCT.-'66)	1	1	SEDAN(A,B TYPE)411	N
	4	86000-16911	ASSY-SEAT,FRONT(BLUE)	1		SEDAN(A,B TYPE)411	
	5	86000-16919	ASSY-SEAT,FRONT(BLUE)(TO SEP.-'66)	1		SEDAN(A,B TYPE)411	Y
	6	86000-19101	ASSY-SEAT,FRONT(BLUE)(FROM OCT.-'66)	1	1	SEDAN(A,B TYPE)411	N
	7	86000-16912	ASSY-SEAT,FRONT(BROWN)	1		SEDAN(A,B TYPE)411	
	8	86000-16920	ASSY-SEAT,FRONT(BROWN)(TO SEP.-'66)	1		SEDAN(A,B TYPE)411	Y
	9	86000-19102	ASSY-SEAT,FRONT(BROWN)(FROM OCT.-'66)	1	1	SEDAN(A,B TYPE)411	N
	10	86000-16913	ASSY-SEAT,FRONT(GREEN)	1		SEDAN(A,B TYPE)411	
	11	86000-16921	ASSY-SEAT,FRONT(GREEN)(TO SEP.-'66)	1		SEDAN(A,B TYPE)411	Y
	12	86000-19103	ASSY-SEAT,FRONT(GREEN)(FROM OCT.-'66)	1		SEDAN(A,B TYPE)411	N
	13	86000-16914	ASSY-SEAT,FRONT(RED)	1		SEDAN(C TYPE)411	
	14	86000-16922	ASSY-SEAT,FRONT(RED)(TO SEP.-'66)	1		SEDAN(C TYPE)411	Y
	15	86000-19120	ASSY-SEAT,FRONT(RED)(FROM OCT.-'66)	1		SEDAN(C TYPE)411	N

Printed in Japan

REVISED: SEPTEMBER,1968

S	KEY NO.	PART NO.	PART NAME	Q'TY	SALES UNIT	MODEL	ICA
	16	86000-16915	ASSY-SEAT,FRONT(BLUE)	1		SEDAN(C TYPE)411	
	17	86000-16923	ASSY-SEAT,FRONT(BLUE)(TO'66-SEP.)	1		SEDAN(C TYPE)411	Y
	18	86000-19121	ASSY-SEAT,FRONT(BLUE)(FROM OCT.-'66)	1		SEDAN(C TYPE)411	N
	19	86000-16916	ASSY-SEAT,FRONT(BROWN)	1		SEDAN 411	
	20	86000-16924	ASSY-SEAT,FRONT(BROWN)(TO SEP.-'66)	1		SEDAN 4.	Y
	21	86000-19122	ASSY-SEAT,FRONT(BROWN)(FROM OCT.-'66)	1		SEDAN 411	N
	22	86000-16917	ASSY-SEAT,FRONT(GREEN)	1		SEDAN 411	
	23	86000-16925	ASSY-SEAT,FRONT(GREEN)(TO SEP.-'66)	1		SEDAN 411	Y
	24	86000-19123	ASSY-SEAT,FRONT(GREEN)(FROM OCT.-'66)	1	1	SEDAN 411	N
	25	86000-17510	ASSY-SEAT,FRONT(RED)	1		WAGON(EXC.U.S.A.)411	
	26	86000-17515	ASSY-SEAT,FRONT(RED)(TO SEP.-'66)	1		WAGON(EXC.U.S.A.)411	Y
	27	86000-17511	ASSY-SEAT,FRONT(BLUE)	1		WAGON(EXC.U.S.A.)411	
	28	86000-17516	ASSY-SEAT,FRONT(BLUE)(TO SEP.-'66)	1		WAGON(EXC.U.S.A.)411	Y
	29	86000-17512	ASSY-SEAT,FRONT(BROWN)	1		WAGON(EXC.U.S.A.)411	
	30	86000-17517	ASSY-SEAT,FRONT(BROWN)(TO SEP.-'66)	1		WAGON(EXC.U.S.A.)411	Y
	31	86000-17513	ASSY-SEAT,FRONT(GREEN)	1		WAGON(EXC.U.S.A.)411	
	32	86000-17518	ASSY-SEAT,FRONT(GREEN)(TO SEP.-'66)	1		WAGON(EXC.U.S.A.)411	Y
	33	86000-19810	ASSY-SEAT,FRONT(RED)(FROM OCT.-'66)	1		411 WP-U,WPL-U(EXC.U.S.A.)	

Printed in Japan

REVISED: SEPTEMBER,1968

S	KEY NO.	PART NO.	PART NAME	Q'TY	SALES UNIT	MODEL	ICA
	34	86000-19811	ASSY-SEAT,FRONT(BLUE)(FROM OCT.-'66)	1		411 WP-U,WPL-U(EXC.U.S.A.)	
	35	86000-19812	ASSY-SEAT,FRONT(BROWN)(FROM OCT.-'66)	1	1	411 WP-U,WPL-U(EXC.U.S.A.)	
	36	86000-19813	ASSY-SEAT,FRONT(GREEN)(FROM OCT.-'66)	1		411 WP-U,WPL-U(EXC.U.S.A.)	
	37	86000-19820	ASSY-SEAT,FRONT(RED)(FROM OCT.-'66)	1		411 WP-UT,WPL-UT	
	38	86000-19821	ASSY-SEAT,FRONT(BLUE)(FROM OCT.-'66)	1		411 WP-UT,WPL-UT	
	39	86605-19810	TRIM COVER-SEAT BACK(RED)(FROM OCT.-'66)	1		WAGON 411	
	40	86605-19811	TRIM COVER-SEAT BACK(BLUE)(FROM OCT.-'66)	1		WAGON 411	
	41	86605-19812	TRIM COVER-SEAT BACK(BROWN)(FROM OCT.-'66)	1		WAGON 411	
	42	86605-19813	TRIM COVER-SEAT BACK(GREEN)(FROM OCT.-'66)	1		WAGON 411	
	43	86605-19814	TRIM COVER-SEAT BACK(RICH RED)(FROM OCT.-'66)	1		WAGON 411	
	44	86605-19815	TRIM COVER-SEAT BACK(RICH BLACK)(FROM OCT.-'66)	1		WAGON 411	
	45	86305-19810	TRIM COVER-SEAT CUSHION(RED)(FROM OCT.-'66)	1	1	WAGON 411	
	46	86305-19811	TRIM COVER-SEAT CUSHION(BLUE)(FROM OCT.-'66)	1		WAGON 411	
	47	86305-19812	TRIM COVER-SEAT CUSHION(BROWN)(FROM OCT.-'66)	1		WAGON 411	
	48	86305-19813	TRIM COVER-SEAT CUSHION(GREEN)(FROM OCT.-'66)	1		WAGON 411	

S	KEY NO.	PART NO.	PART NAME	Q'TY	SALES UNIT	MODEL	ICA
	49	86305-19814	TRIM COVER-SEAT CUSHION(RICH RED)(FROM OCT.-'66)	1		WAGON 411	
	50	86305-19815	TRIM COVER-SEAT CUSHION(RICH BLACK)(FROM OCT.-'66)	1		WAGON 411	
*	51	96501-10601	ASSY-ASH TRAY	1	1	411(BENCH SEAT)	
*	52	96501-16500	ASSY-ASH TRAY(TO SEP-66)	1	1	411(BENCH SEAT)	Y
	53	96501-24000	ASSY-ASH TRAY(FROM OCT-'66)	1	1	411(BENCH SEAT)	N
	54	96511-10600	SPRING-ASH TRAY	1		411	
	55	00330-82520	SCREW	2	50	411	
	56	86501-10800	ASSY-SLIDE,FRONT SEAT(R.H.)	1		411(EXC.UTK,1,6L)	
	57	86501-10600	ASSY-SLIDE,FRONT SEAT(R.H.)	1	1	411 UTK,1,6L	
	58	86502-10800	ASSY-SLIDE,FRONT SEAT(L.H.)	1		411(EXC.UTK,1,6L)	
	59	86502-10600	ASSY-SLIDE,FRONT SEAT(L.H.)	1		411 UTK,1,6L	
	60	86503-16900	STOPPER-SEAT SLIDE	2		411 UT,LUT,WUT,WLUT	
	61	86520-10800	SPRING-HELPER,SEAT SLIDE	2	10	411	
	62	86532-16500	WIRE-PULL,SLIDE LOCK(R.H.)	1	1	411	
	63	86533-16500	WIRE-PULL,SLIDE LOCK(L.H.)	1	1	411	
	64	86522-16500	ASSY-LEVER,ADJUSTING,FRONT SEAT	1	5	411	
	65	00314-01210	SCREW TO FIX LEVER	2	50	411	
	66	00915-11010	WASHER-LOCK TO FIX LEVER	2	100	411	

Printed in Japan

REVISED: SEPTEMBER,1968

S	KEY NO.	PART NO.	PART NAME	Q'TY	SALES UNIT	MODEL	ICA
	67	00310-61210	SCREW TO FIX GUIDE	2	50	411	
	68	00915-10610	WASHER-LOCK TO FIX GUIDE	2		411	
	69	00911-14510	NUT TO FIX FRONT SEAT	8		411	
	70	00915-11510	WASHER-LOCK TO FIX FRONT SEAT	8		411	
	71	86800-11601	SET-BELT,SAFETY,FRONT SEAT(BLUE)	2	1	OP.411	
	72	86800-16502	SET-BELT,SAFETY,FRONT SEAT(GREEN)	2		OP.411	
	73	86800-16503	SET-BELT,SAFETY,FRONT SEAT(BROWN)	2		OP.411	
	74	86800-15801	SET-BELT,SAFETY,FRONT SEAT(RED)	2		OP.411	
	75	86800-13801	SET-BELT,SAFETY,FRONT SEAT(GRAY)	2		OP.411	
	76	86800-13802	SET-BELT,SAFETY,FRONT SEAT(BLACK)	2		OP.411	
	77	86559-65000	SHIM-ADJUSTING(4 MM)	AR		411	

Printed in Japan

REVISED: SEPTEMBER,1968

NOTE

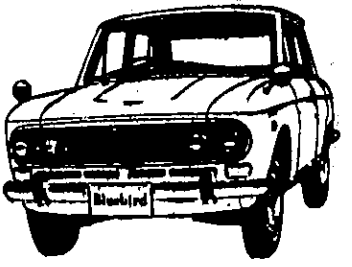

NOTE

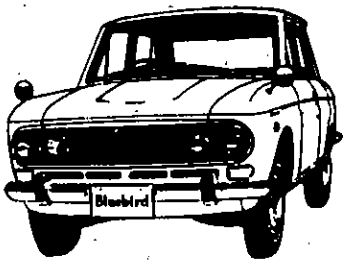

FRONT SEAT (SEPARATE)

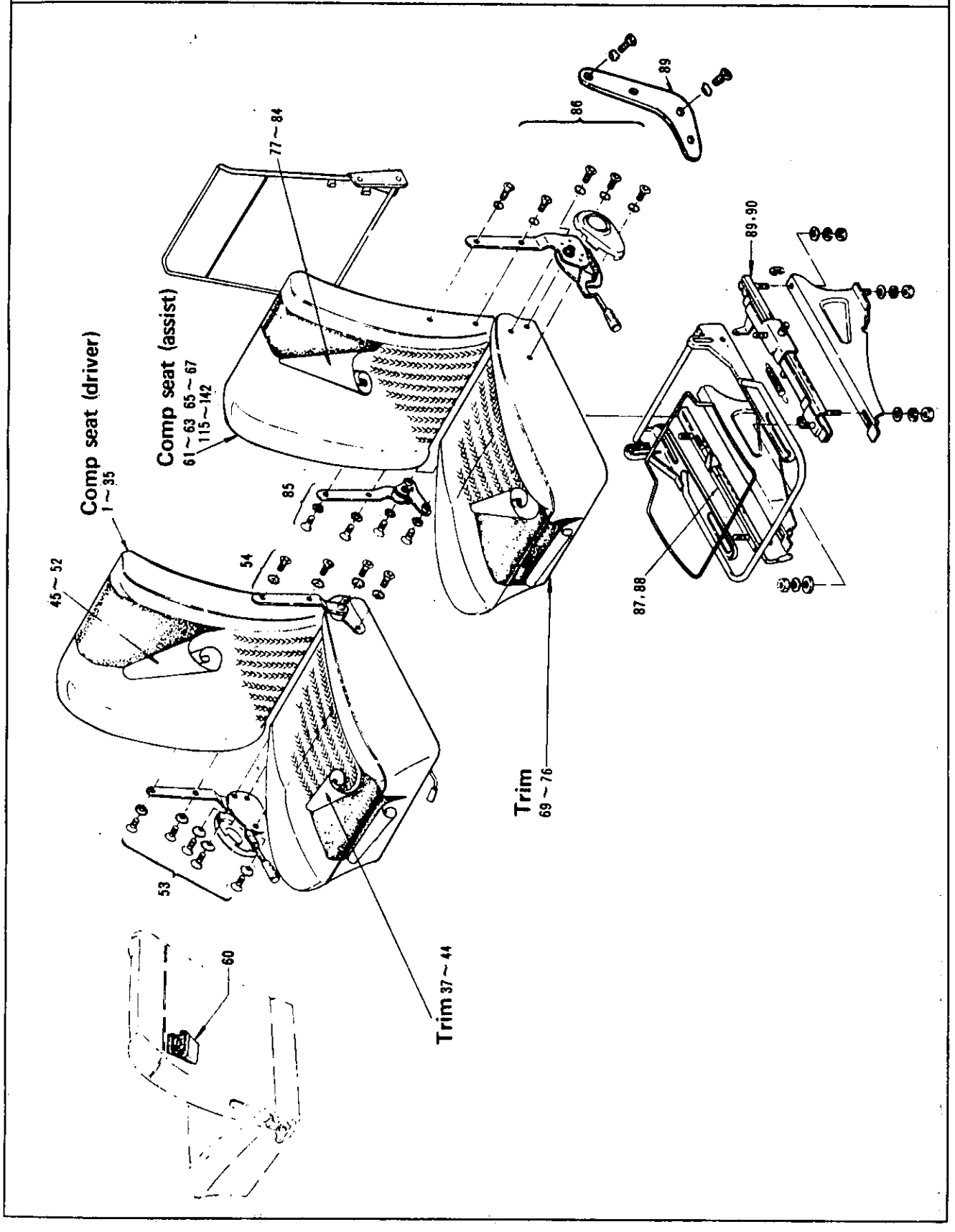

S	KEY NO.	PART NO.	PART NAME	Q'TY	SALES UNIT	MODEL	ICA
			FRONT SEAT (SEPARATE)				
	1	87000-16600	ASSY-SEAT,DRIVER(RED)(TO SEP-66)	1		411 SEDAN(C TYPE)WAGON(B TYPE)	
	2	87000-24100	ASSY-SEAT,DRIVER(RED)(FROM OCT-'66)	1		411 SEDAN(C TYPE)WAGON(B TYPE)	N
	3	87000-16601	ASSY-SEAT,DRIVER(BLUE)(TO SEP-66)	1		411 SEDAN(C TYPE)WAGON(B TYPE)	
	4	87000-24100	ASSY-SEAT,DRIVER(BLUE)(FROM OCT-'66)	1		411 SEDAN(C TYPE)WAGON(B TYPE)	N
	5	87000-16602	ASSY-SEAT,DRIVER(BROWN)(TO SEP-66)	1		411 SEDAN(C TYPE)WAGON(B TYPE)	
	6	87000-24102	ASSY-SEAT,DRIVER(BROWN)(FROM OCT-'66)	1		411 SEDAN(C TYPE)WAGON(B TYPE)	N
	7	87000-16603	ASSY-SEAT,DRIVER(GREEN)(TO SEP-66)	1		411 SEDAN(C TYPE)WAGON(B TYPE)	
	8	87000-24103	ASSY-SEAT,DRIVER(GREEN)(FROM OCT-'66)	1		411 SEDAN(C TYPE)WAGON(B TYPE)	N
	9	87000-16910	ASSY-SEAT,DRIVER(RED)(TO SEP-66)	1		411 SEDAN(A&B TYPE EXC.U.S.A.)	
	10	87000-19100	ASSY-SEAT,DRIVER(RED)(FROM OCT-'66)	1		411 SEDAN(A&B TYPE EXC.U.S.A.)	N
	11	87000-19104	ASSY-SEAT,DRIVER(RED)(FROM C/#P411-057525,PL411-200375)	1		411 SEDAN(A&B TYPE EXC.U.S.A.)	N
	12	87000-16911	ASSY-SEAT,DRIVER(BLUE)(TO SEP-66)	1		411 SEDAN(A&B TYPE EXC.U.S.A.)	

Printed in Japan

REVISED: SEPTEMBER,1968

S	KEY NO.	PART NO.	PART NAME	Q'TY	SALES UNIT	MODEL	ICA
	13	87000-19101	ASSY-SEAT,DRIVER(BLUE)(FROM OCT-'66)	1	1	411 SEDAN(A&B TYPE EXC.U.S.A.)	N
	14	87000-19105	ASSY-SEAT,DRIVER(BLUE)(FROM C/#P411-057525,PL411-200375)	1		411 SEDAN(A&B TYPE EXC.U.S.A.)	N
	15	87000-16912	ASSY-SEAT,DRIVER(BROWN)(TO SEP-66)	1		411 SEDAN(A&B TYPE EXC.U.S.A.)	
	16	87000-19102	ASSY-SEAT,DRIVER(BROWN)(FROM OCT-'66)(INC.U.S.A.)	1		411 SEDAN(A&B TYPE EXC.U.S.A.)	N
	17	87000-19106	ASSY-SEAT,DRIVER(BROWN)(FROM C/#P411-57525,PL411-200375)(INC.U.S.A.)	1		411 SEDAN(A&B TYPE EXC.U.S.A.)	N
	18	87000-16913	ASSY-SEAT,DRIVER(GREEN)(TO SEP-66)	1	1	411 SEDAN(A&B TYPE EXC.U.S.A.)	
	19	87000-19103	ASSY-SEAT,DRIVER(GREEN)(FROM OCT-'66)	1		411 SEDAN(A&B TYPE EXC.U.S.A.)	N
	20	87000-19107	ASSY-SEAT,DRIVER(GREEN)(FROM C/#P411-57525,PL411-200375)	1		411 SEDAN(A&B TYPE EXC.U.S.A.)	N
	21	87000-16910	ASSY-SEAT,DRIVER(RED)(TO SEP-66)	1		411 WAGON(A TYPE)	
	22	87000-19100	ASSY-SEAT,DRIVER(RED)(FROM OCT-'66)	1		411 WAGON(A TYPE)	N
	23	87000-16911	ASSY-SEAT,DRIVER(BLUE)(TO SEP-66)	1		411 WAGON(A TYPE)	
	24	87000-19101	ASSY-SEAT,DRIVER(BLUE)(FROM OCT-'66)	1	1	411 WAGON(A TYPE)	N
	25	87000-16912	ASSY-SEAT,DRIVER(BROWN)(TO SEP-66)	1		411 WAGON(A TYPE)	
	26	87000-19102	ASSY-SEAT,DRIVER(BROWN)(FROM OCT-'66)	1		411 WAGON(A TYPE)	N
	27	87000-16913	ASSY-SEAT,DRIVER(GREEN)(TO SEP-66)	1	1	411 WAGON(A TYPE)	

Printed in Japan

REVISED: SEPTEMBER,1968

S	KEY NO.	PART NO.	PART NAME	Q'TY	SALES UNIT	MODEL	ICA
	28	87000-19103	ASSY-SEAT,DRIVER(GREEN)(FROM OCT-'66)	1		411 WAGON(A TYPE)	N
	29	87000-15800	ASSY-SEAT,DRIVER(RICH BLACK)(TO SEP-66)	1		411 U.S.A. &CHNADA(OP .ALL)	
	30	87000-15806	ASSY-SEAT,DRIVER(RICH BLACK)(FROM OCT-'66)	1		411 U.S.A. &CHNADA(OP .ALL)	N
	31	87000-18701	ASSY-SEAT,DRIVER(RICH BLACK)(FROM C/#P411-05 7525,PL411-20375)	1		411 U.S.A. &CHNADA(OP .ALL)	N
	32	87100-15806	ASSY-FRAME & BACK (NOT FOR SALE)	1		411 U.S.A. &CHNADA(OP .ALL)	
	33	87000-17000	ASSY-SEAT,DRIVER(RICK RED)(TO SEP-66)	1	1	411 U.S.A. &CHNADA(OP .ALL)	
	34	87000-17001	ASSY-SEAT,DRIVER(RICK RED)(FROM OCT-'66)	1		411 U.S.A. &CHNADA(OP .ALL)	N
	35	87000-18700	ASSY-SEAT,DRIVER(RICK RED)(FROM C/#P411-0575 25,PL411-200375)	1	1	411 U.S.A. &CHNADA(OP .ALL)	N
	36	87100-17001	ASSY-FRAME & BACK (NOT FOR SALE)	1		411 U.S.A. &CHNADA (OP.ALL)	
	37	87320-19104	TRIM-DRIVER SEAT,CUSHI ON(RED)FROM C/# P411-0 57525,PL411-200375	1		SEDAN(A&B TYPE)411	
	38	87320-19105	TRIM-DRIVER SEAT,CUSHI ON(BLUE)FROM C/# P411- 057525,PL411-200375	1		SEDAN(A&B TYPE)411	
	39	87320-19106	TRIM-DRIVER SEAT,CUSHI ON(BROWN)FROM C/# P411 -057525,PL411-200375	1		SEDAN(A&B TYPE)411	
	40	87320-19107	TRIM-DRIVER SEAT,CUSHI ON(GREEN)FROM C/# P411 -057525,PL411-200375	1	1	SEDAN(A&B TYPE)411	

Printed in Japan

REVISED: SEPTEMBER,1968

S	KEY NO.	PART NO.	PART NAME	Q'TY	SALES UNIT	MODEL	ICA
	41	87305-15800	TRIM-DRIVER SEAT,CUSHION(RICH BLACK)TO C/# P411-057524 PL411-200374 R411-034815 RL411-010236	1		411 U.S.A. &CANADA(OP.ALL)	
	42	87305-17000	TRIM-DRIVER SEAT,CUSHION(RICH RED)TO C/# P411-057524PL411-200374 R411-034815 RL411-010236	1		411 U.S.A. &CANADA(OP.ALL)	
	43	87320-18701	TRIM-DRIVER SEAT,CUSHION(RICH BLACK)FROM C/# P411-057525,PL411-200375,R411-034816,RL411-010237	1		411 U.S.A. &CANADA(OP.ALL)	N
	44	87320-18700	TRIM-DRIVER SEAT,CUSHION(RICH RED)FROM C/# P411-057525,PL411-200375,R411-034816,RL411-010237	1	1	411 U.S.A. &CANADA(OP.ALL)	N
	45	87620-19104	TRIM-DRIVER SEAT,BACK(RED)FROM C/# P411-057525,PL411-200375	1		SEDAN(A&B TYPE)411	
	46	87620-19105	TRIM-DRIVER SEAT,BACK(BLUE)FROM C/# P411-057525,PL411-200375	1		SEDAN(A&B TYPE)411	
	47	87620-19106	TRIM-DRIVER SEAT,BACK(BROWN)FROM C/# P411-057525,PL411-200375	1		SEDAN(A&B TYPE)411	
	48	87620-19107	TRIM-DRIVER SEAT,BACK(GREEN)FROM C/# P411-057525,PL411-200375	1	1	SEDAN(A&B TYPE)411	
	49	87605-15800	TRIM-DRIVER SEAT,BACK(RICH BLACK)TO C/# P411-057524 PL411-200374 R411-034815 RL411-010236	1		411 U.S.A. &CANADA(OP.ALL)	
	50	87605-17000	TRIM-DRIVER SEAT,BACK(RICH RED)TO C/# P411-057524 PL411-200374 R411-034815 RL411-010236	1		411 U.S.A. &CANADA(OP.ALL)	

REVISED: SEPTEMBER,1968

Printed in Japan

S	KEY NO.	PART NO.	PART NAME	Q'TY	SALES UNIT	MODEL	ICA
	51	87620-18701	TRIM-DRIVER SEAT,BACK(RICH BLACK)FROM C/# P411-057525,PL411-200375,R411-034816,RL411-010237	1		411 U.S.A.&CANADA(OP.ALL)	N
	52	87620-18700	TRIM-DRIVER SEAT,BACK(RICH RED)FROM C/# P411-057525,PL411-200375,R411-034816,RL411-010237	1	1	411 U.S.A.&CANADA(OP.ALL)	N
	53	87401-21100	ASSY-DEVICE,DRIVER SEAT(R.H.)FROM C/# P411-057525,PL411-200375,R411-034816,RL411-010237	1		411	
	54	87402-21100	ASSY-DEVICE,DRIVER SEAT(L.H.)FROM C/# P411-057525,PL411-2003758&411-034816,RL411-010237	1		411	
	55	87501-11800	ASSY-SLIDE,DRIVER SEAT(R.H.)(TO C/# P411-057524 PL411-200376,R411-034815 RL411-010236)	1		411(SEPARATE SEAT)	
*	56	87501-19104	ASSY-SLIDE,DRIVER SEAT(R.H.)(FROM C/# P411-057525,PL411-200375,R411-034816,RL411-010237)	1	1	411(SEPARATE SEAT)	N
	57	87502-11800	ASSY-SLIDE,DRIVER SEAT(L.H.)(TO C/# P411-057524,PL411-2003748&411-034815 RL411-010236)	1	1	411(SEPARATE SEAT)	
*	58	87502-19104	ASSY-SLIDE,DRIVER SEAT(L.H.)(FROM C/# P411-057525,PL411-2003758&411-034816,RL411-010237)	1	1	411(SEPARATE SEAT)	N
	59	87532-11800	WIRE-PULL,SLIDE LOCK,DRIVER SEAT	1	5	411(SEPARATE SEAT)	
	60	96501-11800	ASSY-ASH TRAY	1	5	411(SEPARATE SEAT)	
	61	87050-15800	ASSY-SEAT,ASSISTANT(RICH BLACK)(TO SEP-66)	1		411 U.S.A.&CANADA(OP.ALL)	

REVISED: SEPTEMBER,1968

Printed in Japan

S	KEY NO.	PART NO.	PART NAME	Q'TY	SALES UNIT	MODEL	ICA
*	62	87050-15806	ASSY-SEAT,ASSISTANT(RICH BLACK)(FROM OCT-'66)	1		411 U.S.A. &CANADA(OP.ALL)	N
	63	87050-18701	ASSY-SEAT,ASSISTANT(RICH BLACK)(FROM C/# P411-057525,PL411-200375,R411-034816,RL411-010237)	1		411 U.S.A. &CANADA(OP.ALL)	N
*	64	87150-15806	ASSY-FRAME & BACK (NOT FOR SALE)	1		411 U.S.A. &CANADA(OP.ALL)	
	65	87050-17000	ASSY-SEAT,ASSISTANT(RICH RED)(TO SEP-66)	1	1	411 U.S.A. &CANADA(OP.ALL)	
	66	87050-17001	ASSY-SEAT,ASSISTANT(RICH RED)(FROM OCT-'66)	1		411 U.S.A. &CANADA(OP.ALL)	N
	67	87050-18700	ASSY-SEAT,ASSISTANT(RICH RED)(FROM C/# P411-057525,PL411-200375,R411-034816,RL411-010237)	1	1	411 U.S.A. &CANADA(OP.ALL)	N
*	68	87150-17001	ASSY-FRAME & BACK (NOT FOR SALE)	1		411 U.S.A. &CANADA(OP.ALL)	
	69	87370-19104	TRIM-ASSISTANT SEAT,CUSHION(RED)FROM C/# P411-057525,PL411-200375	1		SEDAN(A&B TYPE EXC.U.S.A.&CANADA)411	
	70	87370-19105	TRIM-ASSISTANT SEAT,CUSHION(BLUE)FROM C/# P411-057525,PL411-200375	1		SEDAN(A&B TYPE EXC.U.S.A.&CANADA)411	
	71	87370-19106	TRIM-ASSISTANT SEAT,CUSHION(BROWN)FROM C/# P411-057525,PL411-200375	1		SEDAN(A&B TYPE EXC.U.S.A.&CANADA)411	
	72	87370-19107	TRIM-ASSISTANT SEAT,CUSHION(GREEN)FROM C/# P411-0575	1	1	SEDAN(A&B TYPE EXC.U.S.A.&CANADA)411	

REVISED: SEPTEMBER,1968

Printed in Japan

S	KEY NO.	PART NO.	PART NAME	Q'TY	SALES UNIT	MODEL	ICA
	73	87355-15800	TRIM-ASSISTANT SEAT,CUSHION(RICH BLACK)TO C/# P411-057524 PL411-200374 R411-034815 RL411-010236	1		411 U.S.A.&CANADA(OP.ALL)	
	74	87355-17000	TRIM-ASSISTANT SEAT,CUSHION(RICH RED)TO C/# P411-057524 PL411-200374 R411-034815 RL411-010236	1		411 U.S.A.&CANADA(OP.ALL)	
	75	87370-18701	TRIM-ASSISTANT SEAT,CUSHION(RICH BLACK)FROM C/# P411-057525,PL411-200375,R411-034816,RL411-010237	1		SEDAN(A&B TYPE)EXC.U.S.A.&CANADA)411	N
	76	87370-18700	TRIM-ASSISTANT SEAT,CUSHION(RICH RED)FROM C/# P411-057525,PL411-200375,R411-034816,RL411-010237	1	1	SEDAN(A&B TYPE)EXC.U.S.A.&CANADA)411	N
	77	87620-19104	TRIM-ASSISTANT SEAT,BACK(RED)FROM C/# P411-057525,PL411-200375	1		SEDAN(A&B TYPE EXC.U.S.A.&CANADA)411	
	78	87620-19105	TRIM-ASSISTANT SEAT,BACK(BLUE)FROM C/# P411-057525,PL411-200375	1		SEDAN(A&B TYPE EXC.U.S.A.&CANADA)411	
	79	87620-19106	TRIM-ASSISTANT SEAT,BACK(BROWN)FROM C/# P411-057525,PL411-200375	1		SEDAN(A&B TYPE EXC.U.S.A.&CANADA)411	
	80	87620-19107	TRIM-ASSISTANT SEAT,BACK(GREEN)FROM C/# P411-057525,PL411-200375	1 &	1	SEDAN(A&B TYPE EXC.U.S.A.&CANADA)411	
	81	87655-15800	TRIM-ASSISTANT SEAT,BACK(RICH BLACK)TO C/# P411-057524 PL411-200374 R411-034815 RL411-010236	1		411 U.S.A.&CANADA(OP.ALL)	

REVISED: SEPTEMBER,1968

Printed in Japan

S	KEY NO.	PART NO.	PART NAME	Q'TY	SALES UNIT	MODEL	ICA
	82	87655-17000	TRIM-ASSISTANT SEAT,BACK(RICH RED)TO C/# P411-057524PL411-200374 R411-034815 RL411-010236	1		411 U.S.A. &CANADA(OP.ALL)	
	83	87620-18701	TRIM-ASSISTANT SEAT,BACK(RICH BLACK)FROM C/# P411-057525,PL411-200375,R411-034816,RL411-010237	1		411 U.S.A. &CANADA(OP.ALL)	N
	84	87620-18700	TRIM-ASSISTANT SEAT,BACK(RICH RED)FROM C/# P411-057525,PL411-200375,R411-034816,RL411-010237	1	1	411 U.S.A. &CANADA(OP.ALL)	N
	85	87451-21100	ASSY-DEVICE,ASSISTANT SEAT(R.H.)FROM C/# P411-057525,PL411-200375,R411-034816,RL411-010237	1		411	
	86	87452-21100	ASSY-DEVICE,ASSISTANT SEAT(L.H.)FROM C/# P411-057525,PL411-200375,R411-034816,RL411-010237	1		411	
	87	87503-11800	ASSY-SLIDE,ASSIST SEAT(R.H.)(C/#P411-057524,PL411-200374 R411-034815,RL411-010236)	1	1	411(SEPARATE SEAT)	
*	88	87551-19104	ASSY-SLIDE,ASSIST SEAT((R.H.)(FROM C/#P411-057525,PL411-200375,R411-034816,RL411-010237)	1	1	411(SEPARATE SEAT)	N
	89	87501-11800	ASSY-SLIDE,ASSIST SEAT(L.H.)(TO C/#P411-057524,PL411-200374,R411-034815 RL411-010236)	1		411(SEPARATE SEAT)	
*	90	87552-19104	ASSY-SLIDE,ASSIST SEAT(L.H.)(FROM C/#P411-057525,PL411-200375,R411-034816,RL411-010237)	1	1	411(SEPARATE SEAT)	N
	91	87532-11800	WIRE-PULL,SLIDE LOCK(TOC/#P411-056524,PL411-200374,R411-034815 RL411-010236)	1	5	411(SEPARATE SEAT)	

Printed in Japan

REVISED: SEPTEMBER,1968

S	KEY NO.	PART NO.	PART NAME	Q'TY	SALES UNIT	MODEL	ICA
	92	87532-21700	WIRE-PULL,SLIDE LOCK(FROM C/#P411-057525,PL411-200375,R411-034816,RL411-010237)	1	1	411(SEPARATE SEAT)	N
	93	86800-11601	SET-BELT,SAFETY,FRONT SEAT(BLUE)	2	1	OP.411	
	94	86800-16502	SET-BELT,SAFETY,FRONT SEAT(GREEN)	2		OP.411	
	95	86800-16503	SET-BELT,SAFETY,FRONT SEAT(BROWN)	2		OP.411	
	96	86800-15801	SET-BELT,SAFETY,FRONT SEAT(RED)	2		OP.411	
	97	86800-13801	SET-BELT,SAFETY,FRONT SEAT(GRAY)	2		OP.411	
	98	86800-13802	SET-BELT,SAFETY,FRONT SEAT(BLACK)	2		OP.411	
	99	86800-24000	SET-BELT,SAFETY,FRONT SEAT(RED)	1	1	OP.(U.S.A.)411	
	100	86800-24001	SET-BELT,SAFETY,FRONT SEAT(BLUE)	1	1	OP.(U.S.A.)411	
	101	86800-24002	SET-BELT,SAFETY,FRONT SEAT(BROWN)	1	1	OP.(U.S.A.)411	
	102	86800-24003	SET-BELT,SAFETY,FRONT SEAT(GREEN)	1	1	OP.(U.S.A.)411	
	103	86800-24004	SET-BELT,SAFETY,FRONT SEAT(BLACK)	1		OP.(U.S.A.)411	
	104	86800-19100	SET-BELT,SAFETY,FRONT SEAT,3-POINT(RED)	1		OP.411 U(MALYSIA)	
	105	86800-19101	SET-BELT,SAFETY,FRONT SEAT,3-POINT(BLUE)	1		OP.411 U(MALYSIA)	
	106	86800-19102	SET-BELT,SAFETY,FRONT SEAT,3-POINT(BROWN)	1		OP.411 U(MALYSIA)	
	107	86800-19103	SET-BELT,SAFETY,FRONT SEAT,3-POINT(GREEN)	1		OP.411 U(MALYSIA)	
	108	86800-19104	SET-BELT,SAFETY,FRONT SEAT,3-POINT(BLACK)	1		OP.411 U(MALYSIA)	

REVISED: SEPTEMBER,1968

Printed in Japan

S	KEY NO.	PART NO.	PART NAME	QTY	SALES UNIT	MODEL	ICA
	109	00314-00810	SCREW(TO FIX ASH TRAY)	2		411(SEPARATE SEAT)	
	110	00314-51610	SCREW TO FIX SEAT SLIDE	8	50	411(SEPARATE SEAT)	
	111	00915-11510	WASHER-LOCK TO FIX SEAT SLIDE	8		411(SEPARATE SEAT)	
	112	00915-41510	WASHER-PLAIN TO FIX SEAT	8		411(SEPARATE SEAT)	
	113	00915-11510	WASHER-LOCK TO FIX SEAT	8		411(SEPARATE SEAT)	
	114	00911-14510	NUT TO FIX SEAT	8		411(SEPARATE SEAT)	
	115	87050-16600	ASSY-SEAT,ASSISTANT(RED)(TO SEP-66)	1	1	411 SEDAN(C TYPE)WAGON(B TYPE)	
	116	87050-24100	ASSY-SEAT,ASSISTANT(RED)(FROM OCT-'66)	1		411 SEDAN(C TYPE)WAGON(B TYPE)	N
	117	87050-16601	ASSY-SEAT,ASSISTANT(BLUE)(TO SEP-66)	1		411 SEDAN(C TYPE)WAGON(B TYPE)	
	118	87050-24101	ASSY-SEAT,ASSISTANT(BLUE)(FROM OCT-'66)	1		411 SEDAN(C TYPE)WAGON(B TYPE)	N
	119	87050-16602	ASSY-SEAT,ASSISTANT(BROWN)(TO SEP-66)	1		411 SEDAN(C TYPE)WAGON(B TYPE)	
	120	87050-24102	ASSY-SEAT,ASSISTANT(BROWN)(FROM OCT-'66)	1		411 SEDAN(C TYPE)WAGON(B TYPE)	N
	121	87050-16603	ASSY-SEAT,ASSISTANT(GREEN)(TO SEP-66)	1		411 SEDAN(C TYPE)WAGON(B TYPE)	
	122	87050-24103	ASSY-SEAT,ASSISTANT(GREEN)(FROM OCT-'66)	1		411 SEDAN(C TYPE)WAGON(B TYPE)	N
	123	87050-16910	ASSY-SEAT,ASSISTANT(RED)(TO SEP-66)	1		411 USA&CANADA(OP.ALL)	

Printed in Japan.

REVISED: SEPTEMBER,1968

S	KEY NO.	PART NO.	PART NAME	Q'TY	SALES UNIT	MODEL	ICA
	124	87050-19100	ASSY-SEAT,ASSISTANT(RED)(FROM OCT-'66)	1		411 USA&CANADA(OP.ALL)	N
	125	87050-19104	ASSY-SEAT,ASSISTANT(RED)(FROM C/# P411-057525,PL411-200375)	1		411 USA&CANADA(OP.ALL)	N
	126	87050-16911	ASSY-SEAT,ASSISTANT(BLUE)(TO SEP-66)	1		411 USA&CANADA(OP.ALL)	
	127	87050-19101	ASSY-SEAT,ASSISTANT(BLUE)(FROM OCT-'66)	1		411 SEDAN(A&B TYPE EXC.U.S.A.)	N
	128	87050-19105	ASSY-SEAT,ASSISTANT(BLUE)(FROM C/# P411-057525,PL411-200375)	1		411 SEDAN(A&B TYPE EXC.U.S.A.)	N
	129	87050-16912	ASSY-SEAT,ASSISTANT(BROWN)(TO SEP-66)	1		411 SEDAN(A&B TYPE EXC.U.S.A.)	
	130	87050-19102	ASSY-SEAT,ASSISTANT(BROWN)(FROM OCT-'66)(INC.U.S.A.)	1		411 SEDAN(A&B TYPE EXC.U.S.A.)	N
	131	87050-19106	ASSY-SEAT,ASSISTANT(BROWN)(FROM C/# P411-057525,PL411-200375)(2(C.U.S.A.)	1		411 SEDAN(A&B TYPE EXC.U.S.A.)	N
	132	87050-16913	ASSY-SEAT,ASSISTANT(GREEN)(TO SEP-66)	1	1	411 SEDAN(A&B TYPE EXC.U.S.A.)	
	133	87050-19103	ASSY-SEAT,ASSISTANT(GREEN)(FROM OCT-'66)	1		411 SEDAN(A&B TYPE EXC.U.S.A.)	N
	134	87050-19107	ASSY-SEAT,ASSISTANT(GREEN)(FROM P411-057525,PL411-200375)	1		411 SEDAN(A&B TYPE EXC.U.S.A.)	N
	135	87050-16910	ASSY-SEAT,ASSISTANT(RED)(TO SEP-66)	1		411 WAGON(A TYPE)	
	136	87050-19100	ASSY-SEAT,ASSISTANT(RED)(FROM OCT-'66)	1		411 WAGON(A TYPE)	N

S	KEY NO.	PART NO.	PART NAME	Q'TY	SALES UNIT	MODEL	ICA
	137	87050-16911	ASSY-SEAT,ASSISTANT(BLUE)(TO SEP-66)	1		411 WAGON(A TYPE)	
	138	87050-19101	ASSY-SEAT,ASSISTANT(BLUE)(FROM OCT-'66)	1		411 WAGON(A TYPE)	N
	139	87050-16912	ASSY-SEAT,ASSISTANT(BROWN)(TO SEP-66)	1		411 WAGON(A TYPE)	
	140	87050-19102	ASSY-SEAT,ASSISTANT(BROWN)(FROM OCT-'66)	1		411 WAGON(A TYPE)	N
	141	87050-16913	ASSY-SEAT,ASSISTANT(GREEN)(TO SEP-66)	1	1	411 WAGON(A TYPE)	
	142	87050-19103	ASSY-SEAT,ASSISTANT(GREEN)(FROM OCT-'66)	1		411 WAGON(A TYPE)	N

REVISED: SEPTEMBER,1968

Printed in Japan

NOTE

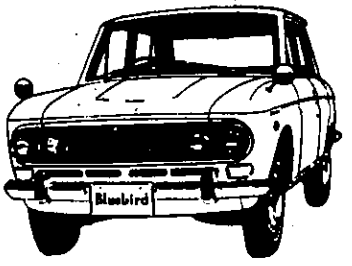

REAR SEAT (SEDAN)

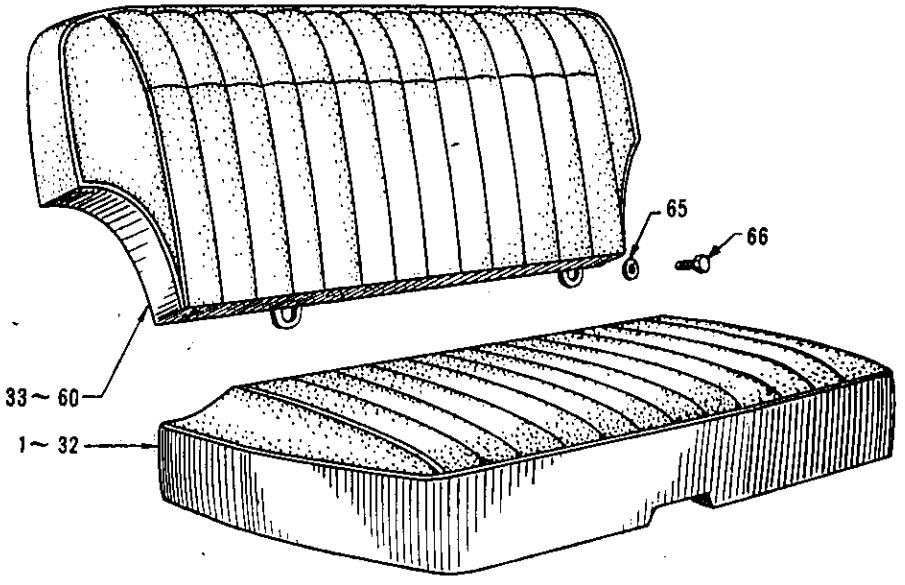

S	KEY NO.	PART NO.	PART NAME	Q'TY	SALES UNIT	MODEL	ICA
			REAR SEAT (SEDAN)				
	1	88300-16500	ASSY-CUSHION,REAR SEAT (RED)	1	1	SEDAN(A&B TYPE)411	
	2	88300-16503	ASSY-CUSHION,REAR SEAT (RED)	1		SEDAN(A&B TYPE)411	Y
	3	88300-18400	ASSY-CUSHION,REAR SEAT (RED)(FROM APR-'66 TO SEP-66)	1		SEDAN(A&B TYPE)411	N
	4	88300-24000	ASSY-SUCHION,REAR SEAT (RED)(FROM OCT-'66)	1		SEDAN(A&B TYPE)411	N
	5	88300-16501	ASSY-CUSHION,REAR SEAT (BLUE)	1		SEDAN(A&B TYPE)411	
	6	88300-16504	ASSY-CUSHION,REAR SEAT (BLUE)(TO MAR-66)	1		SEDAN(A&B TYPE)411	Y
	7	88300-18401	ASSY-CUSHION,REAR SEAT (BLUE)(FROM APR-'66 TO SEP-66)	1		SEDAN(A&B TYPE)411	N
	8	88300-24001	ASSY-CUSHION,REAR SEAT (BLUE)(FROM OCT-'66)	1		SEDAN(A&B TYPE)411	N
	9	88300-16502	ASSY-CUSHION,REAR SEAT (BROWN)(TO MAR-66)	1		SEDAN(A&B TYPE)411	
	10	88300-18402	ASSY-CUSHION,REAR SEAT (BROWN)(FROM APR.-'66 TO SEP-66)	1		SEDAN(A&B TYPE)411	N
	11	88300-24002	ASSY-CUSHION,REAR SEAT (BROWN)(FROM OCT.-'66)	1	1	SEDAN(A&B TYPE)411	N
	12	88300-18403	ASSY-CUSHION,REAR SEAT (GREEN)(FROM APR.-'66 TO SEP-66)	1		SEDAN(A&B TYPE)411	
	13	88300-24003	ASSY-CUSHION,REAR SEAT (GREEN)(FROM OCT.-'66)	1		SEDAN(A&B TYPE)411	N
	14	88300-16910	ASSY-CUSHION,REAR SEAT (GREEN)(TO MAR-66)	1		SEDAN(A&B TYPE)411	

Printed in Japan

REVISED: SEPTEMBER,1968

S	KEY NO.	PART NO.	PART NAME	Q'TY	SALES UNIT	MODEL	ICA
	15	88300-19100	ASSY-CUSHION,REAR SEAT (GREEN)(FROM APR.-'66)	1		SEDAN(A&B TYPE)411	N
	16	88300-15801	ASSY-CUSHION,REAR SEAT (RICH BLACK)(TO MAR-66)	1		SEDAN(U.S.A.ONLY)411	
	17	88300-18802	ASSY-CUSHION,REAR SEAT (RICH BLACK)(FROM APR.-'66)	1		SEDAN(U.S.A.ONLY)411	N
	18	88300-17001	ASSY-CUSHION,REAR SEAT (RICH RED)	1		SEDAN(U.S.A.ONLY)411	
	19	88300-13608	ASSY-CUSHION,REAR SEAT (RED)(TO MAR-66)	1		SEDAN(C TYPE)411	
	20	88300-18500	ASSY-CUSHION,REAR SEAT (RED)(FROM APR.-'66 TO SEP-66)	1		SEDAN(C TYPE)411	N
	21	88300-24100	ASSY-CUSHION,REAR SEAT (RED)(FROM OCT.-'66)	1		SEDAN(C TYPE)411	N
	22	88300-13609	ASSY-CUSHION,REAR SEAT (BLUE)(TO MAR-66)	1		SEDAN(C TYPE)411	
	23	88300-18501	ASSY-CUSHION,REAR SEAT (BLUE)(FROM APR.-'66 TO SEP-66)	1		SEDAN(C TYPE)411	N
	24	88300-24101	ASSY-CUSHION,REAR SEAT (BLUE)(FROM OCT.-'66)	1		SEDAN(C TYPE)411	N
	25	88300-13610	ASSY-CUSHION,REAR SEAT (BROWN)(TO MAR-66)	1		SEDAN(C TYPE)411	
	26	88300-18502	ASSY-CUSHION,REAR SEAT (BROWN)(FROM APR.-'66 TO SEP-66)	1		SEDAN(C TYPE)411	N
	27	88300-24102	ASSY-CUSHION,REAR SEAT (BROWN)(FROM OCT.-'66)	1		SEDAN(C TYPE)411	N
	28	88300-13611	ASSY-CUSHION,REAR SEAT (GREEN)(TO MAR-66)	1		SEDAN(C TYPE)411	
	29	88300-18503	ASSY-CUSHION,REAR SEAT (GREEN)(FROM APR.-'66 TO SEP-6	1		SEDAN(C TYPE)411	N

Printed in Japan

REVISED: SEPTEMBER,1968

S	KEY NO.	PART NO.	PART NAME	Q'TY	SALES UNIT	MODEL	ICA
	30	88300-24103	ASSY-CUSHION,REAR SEAT (GREEN)(FROM OCT.-'66)	1		SEDAN(C TYPE)411	N
	31	88300-18800	ASSY-CUSHION,REAR SEAT (RICH BLACK)	1		1.6 SEDAN(U.S.A.ONLY)411	
	32	88300-18801	ASSY-CUSHION,REAR SEAT (RICH BLACK)	1	1	1.6 SEDAN(U.S.A.ONLY)411	N
	33	88600-16500	ASSY-BACK,REAR SEAT(RED)(TO SEP-65)	1		SEDAN(A&B TYPE)411	
	34	88600-16503	ASSY-BACK,REAR SEAT(RED)(FROM OCT.-'65 TO SEP-66)	1		SEDAN(A&B TYPE)411	N
	35	88600-24000	ASSY-BACK,REAR SEAT(RED)(FROM OCT.-'66 TO SEP-65)	1		SEDAN(A&B TYPE)411	N
	36	88600-16501	ASSY-BACK,REAR SEAT(BLUE)(TO SEP-65)	1		SEDAN(A&B TYPE)411	
	37	88600-16504	ASSY-BACK,REAR SEAT(BLUE)(FROM OCT.-'65 TO SEP-66)	1		SEDAN(A&B TYPE)411	N
	38	88600-24001	ASSY-BACK,REAR SEAT(BLUE)(FROM OCT.-'66)	1		SEDAN(A&B TYPE)411	N
	39	88600-16502	ASSY-BACK,REAR SEAT(BROWN)(TO SEP-65)	1		SEDAN(A&B TYPE)411	
	40	88600-16505	ASSY-BACK,REAR SEAT(BROWN)(FROM OCT.-'65 TO SEP-66)	1		SEDAN(A&B TYPE)411	N
	41	88600-24002	ASSY-BACK,REAR SEAT(BROWN)(FROM OCT.-'66)	1	1	SEDAN(A&B TYPE)411	N
	42	88600-16910	ASSY-BACK,REAR SEAT(GREEN)(TO SEP-65)	1		SEDAN(A&B TYPE)411	
	43	88600-18400	ASSY-BACK,REAR SEAT(GREEN)(FROM OCT.-'65 TO SEP-66)	1		SEDAN(A&B TYPE)411	N
	44	88600-24003	ASSY-BACK,REAR SEAT(GREEN)(FROM OCT.-'66)	1		SEDAN(A&B TYPE)411	N

Printed in Japan

REVISED: SEPTEMBER,1968

S	KEY NO.	PART NO.	PART NAME	Q'TY	SALES UNIT	MODEL	ICA
	45	88600-15805	ASSY-BACK,REAR SEAT(RICH BLACK)(TO SEP-66)	1		411 U.S.A. &CANADA(OP.411)	
	46	88600-15808	ASSY-BACK,REAR SEAT(RICH BLACK)(FROM OCT.-'66)	1		411 U.S.A. &CANADA(OP.)411	N
	47	88600-17000	ASSY-BACK,REAR SEAT(RICH RED)(TO SEP-66)	1	1	411 U.S.A. &CANADA(OP.)411	
	48	88600-17001	ASSY-BACK,REAR SEAT(RICH RED)(FROM OCT.-'66 TO SEP-65)	1		411 U.S.A. &CANADA(OP.)411	N
	49	88600-13600	ASSY-BACK,REAR SEAT(RED)(TO SEP-65)	1		SEDAN(C TYPE)411	
	50	88600-16600	ASSY-BACK,REAR SEAT(RED)(FROM OCT.-'65 TO SEP-66)	1		SEDAN(C TYPE)411	N
	51	88600-24100	ASSY-BACK,REAR SEAT(RED)(FROM OCT.-'66)	1		SEDAN(C TYPE)411	N
	52	88600-13601	ASSY-BACK,REAR SEAT(BLUE)(TO SEP-65)	1		SEDAN(C TYPE)411	
	53	88600-16601	ASSY-BACK,REAR SEAT(BLUE)(FROM OCT.-'65 TO SEP-66)	1		SEDAN(C TYPE)411	N
	54	88600-24101	ASSY-BACK,REAR SEAT(BLUE)(FROM OCT.-'66)	1		SEDAN(C TYPE)411	N
	55	88600-13602	ASSY-BACK,REAR SEAT(BROWN)(TO SEP-65)	1		SEDAN(C TYPE)411	
	56	88600-16602	ASSY-BACK,REAR SEAT(BROWN)(FROM OCT.-'65 TO SEP-66)	1		SEDAN(C TYPE)411	N
	57	88600-24102	ASSY-BACK,REAR SEAT(BROWN)(FROM OCT.-'66)	1		SEDAN(C TYPE)411	N
	58	88600-13603	ASSY-BACK,REAR SEAT(GREEN)(TO SEP-65)	1		SEDAN(C TYPE)411	
	59	88600-16603	ASSY-BACK,REAR SEAT(GREEN)(FROM OCT.-'65 TO SEP-66)	1		SEDAN(C TYPE)411	N

Printed in Japan

REVISED: SEPTEMBER,1968

S	KEY NO.	PART NO.	PART NAME	Q'TY	SALES UNIT	MODEL	ICA
	60	88600-24103	ASSY-BACK,REAR SEAT(GREEN)(FROM OCT.-'66)	1		SEDAN(C TYPE)411	N
	61	88305-15805	TRIM-REAR SEAT,CUSHION (RICH BLACK)	1		SEDAN(U.S.A.&CANADA ONLY)('65,'66,'67 MODEL YEAR)411	
	62	88305-17000	TRIM-REAR SEAT,CUSHION (RICH BLACK)	1		SEDAN(U.S.A.&CANADA ONLY)('65,'66,'67 MODEL YEAR)411	N
	63	88605-15805	TRIM-REAR SEAT,BACK(RICH RED)	1		SEDAN(U.S.A.&CANADA ONLY)('65,'66,'67 MODEL YEAR)411	
	64	88605-17000	TRIM-REAR SEAT,BACK(RICH RED)	1		SEDAN(U.S.A.&CANADA ONLY)('65,'66,'67 MODEL YEAR)411	N
	65	00915-51410	WASHER-PLAIN TO FIX BACK	2		ALL 411	
	66	00314-41610	SCREW TO FIX BACK	2	50	ALL 411	
	67	88800-24000	SET-BELT,SAFETY,REAR SEAT(RED)(FROM OCT.-'66)	1	1	ALL 411	
	68	88800-24001	SET-BELT,SAFETY,REAR SEAT(BLUE)(FROM OCT.-'66)	1		ALL 411	
	69	88800-24002	SET-BELT,SAFETY,REAR SEAT(BROWN)(FROM OCT.-'66)	1		ALL 411	
	70	88800-24003	SET-BELT,SAFETY,REAR SEAT(GREEN)(FROM OCT.-'66)	1		ALL 411	

REVISED: SEPTEMBER,1968

Printed in Japan

S	KEY NO.	PART NO.	PART NAME	Q'TY	SALES UNIT	MODEL	ICA
	71	88800-24004	SET-BELT,SAFETY,REAR SEAT(BLACK)(FROM OCT.-'66)	1	1	ALL 411	
	72	88800-24005	SET-BELT SAFETY,REAR SEAT(RED)	1	1	OP.411 (U.S.A.)	
	73	88800-24006	SET-BELT SAFETY,REAR SEAT(BLUE)	1	1	OP.411 (U.S.A.)	
	74	88800-24007	SET-BELT SAFETY,REAR SEAT(BROWN)	1	1	OP.411 (U.S.A.)	
	75	88800-24008	SET-BELT SAFETY,REAR SEAT(GREEN)	1	1	OP.411 (U.S.A.)	
	76	88800-24009	SET-BELT SAFETY,REAR SEAT(BLACK)	1		OP.411 (U.S.A.)	

REVISED: SEPTEMBER,1968

Printed in Japan

NOTE

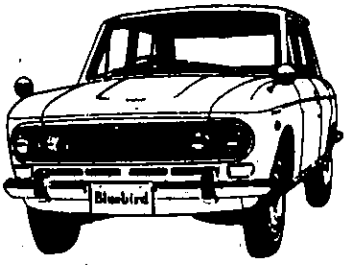

REAR SEAT (WAGON)

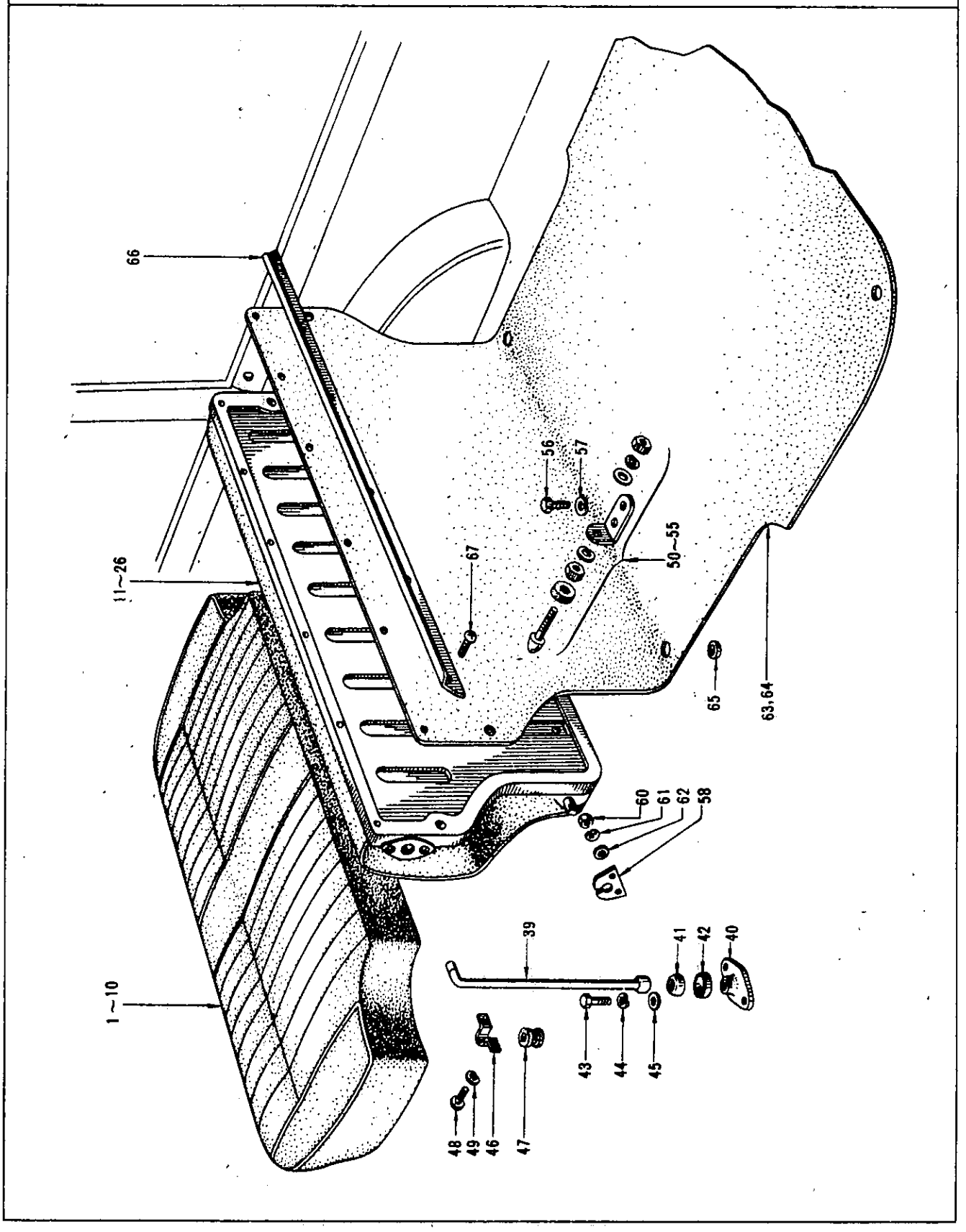

S	KEY NO.	PART NO.	PART NAME	Q'TY	SALES UNIT	MODEL	ICA
			REAR SEAT (WAGON)				
	1	88300-13500	ASSY-CUSHION,REAR SEAT (RED)(TO SEP.-'66)	1		WAGON 411	
	2	88300-19810	ASSY-CUSHION,REAR SEAT (RED)(FROM OCT.-'66)	1		WAGON 411	N
	3	88300-13501	ASSY-CUSHION,REAR SEAT (BLUE)(TO SEP.-'66)	1		WAGON 411	
	4	88300-19811	ASSY-CUSHION,REAR SEAT (BLUE)(FROM OCT.-'66)	1	1	WAGON 411	N
	5	88300-13502	ASSY-CUSHION,REAR SEAT (BROWN)(TO SEP.-'66)	1		WAGON 411	
	6	88300-19812	ASSY-CUSHION,REAR SEAT (BROWN)(FROM OCT.-'66)	1		WAGON 411	N
	7	88300-13503	ASSY-CUSHION,REAR SEAT (GREEN)(TO SEP.-'66)	1		WAGON 411	
	8	88300-19813	ASSY-CUSHION,REAR SEAT (GREEN)(FROM OCT.-'66)	1		WAGON 411	N
	9	88300-19814	ASSY-CUSHION,REAR SEAT (RICH BLACK)	1		WAGON 411	
	10	88300-19815	ASSY-CUSHION,REAR SEAT (RICH RED)	1		WAGON 411	
	11	88600-13500	ASSY-BACK,REAR SEAT(RED)(TO SEP.-'66)	1		WAGON 411	
	12	88600-19810	ASSY-BACK,REAR SEAT(RED)(FROM OCT.-'66)	1		WAGON 411	N
	13	88600-13501	ASSY-BACK,REAR SEAT(BLUE)(TO SEP.-'66)	1		WAGON 411	
	14	88600-19811	ASSY-BACK,REAR SEAT(BLUE)(FROM OCT.-'66)	1	1	WAGON 411	N
	15	88600-13502	ASSY-BACK,REAR SEAT(BROWN)(TO SEP.-'66)	1		WAGON 411	

S	KEY NO.	PART NO.	PART NAME	Q'TY	SALES UNIT	MODEL	ICA
	16	88600-19812	ASSY-BACK,REAR SEAT(BROWN)(FROM OCT.-'66)	1		WAGON 411	N
	17	88600-13503	ASSY-BACK,REAR SEAT(GREEN)(TO SEP.-'66)	1		WAGON 411	
	18	88600-19813	ASSY-BACK,REAR SEAT(GREEN)(FROM OCT.-'66)	1		WAGON 411	N
	19	88600-19814	ASSY-BACK,REAR SEAT(RICH BLACK)	1		WAGON 411	
	20	88600-19815	ASSY-BACK,REAR SEAT(RICH RED)	1		WAGON 411	
	21	88600-19820	ASSY-BACK,REAR SEAT(RED)(FROM WPL411-823053, WRL411-804240)	1		WAGON(U.S.A.)411	
	22	88600-19821	ASSY-BACK,REAR SEAT(RED)(FROM WPL411-823053, WRL411-804240)	1	1	WAGON(U.S.A.)411	
	23	88600-19822	ASSY-BACK,REAR SEAT(BROWN)(FROM WPL411-823053,WRL411-804240)	1		WAGON(U.S.A.)411	
	24	88600-19823	ASSY-BACK,REAR SEAT(GREEN)(FROM WPL411-823053,WRL411-804240)	1	1	WAGON(U.S.A.)411	
	25	88600-19824	ASSY-BACK,REAR SEAT(RICH RED)(FROM WPL411-823053,WRL411-804240)	1	1	WAGON(U.S.A.)411	
	26	88600-19825	ASSY-BACK,REAR SEAT(RICH BLACK)(FROM WPL411-823053,WRL411-804240)	1		WAGON(U.S.A.)411	
	27	88305-19810	TRIM COVER-SEAT CUSHION(FROM OCT.-'66)(RED)	1		WAGON 411	
	28	88305-19811	TRIM COVER-SEAT CUSHION(FROM OCT.-'66)(BLUE)	1	1	WAGON 411	
	29	88305-19812	TRIM COVER-SEAT CUSHION(FROM OCT.-'66)(BROWN)	1		WAGON 411	
	30	88305-19813	TRIM COVER-SEAT CUSHION(FROM OCT.-'66)(GREEN)	1	1	WAGON 411	

Printed in Japan

REVISED: SEPTEMBER,1968

S	KEY NO.	PART NO.	PART NAME	Q'TY	SALES UNIT	MODEL	ICA
	31	88305-19814	TRIM COVER-SEAT CUSHION(FROM OCT.-'66)(RICH RED)	1	1	WAGON 411	
	32	88305-19815	TRIM COVER-SEAT CUSHION(FROM OCT.-'66)(RICH BLACK)	1		WAGON 411	
	33	88605-19810	TRIM COVER-SEAT BACK(FROM OCT.-'66)(RED)	1		WAGON 411	
	34	88605-19811	TRIM COVER-SEAT BACK(FROM OCT.-'66)(BLUE)	1		WAGON 411	
	35	88605-19812	TRIM COVER-SEAT BACK(FROM OCT.-'66)(BROWN)	1		WAGON 411	
	36	88605-19813	TRIM COVER-SEAT BACK(FROM OCT.-'66)(GREEN)	1		WAGON 411	
	37	88605-19814	TRIM COVER-SEAT BACK(FROM OCT.-'66)(RICH RED)	1		WAGON 411	
	38	88605-19815	TRIM COVER-SEAT BACK(FROM OCT.-'66)(RICH BLACK)	1		WAGON 411	
	39	88820-10901	ASSY-STAY,REAR SEAT BACK	2		WAGON 411	
	40	88823-10901	BRACKET-REAR SEAT BACK HOLDER(R.H.)	2	5	WAGON 411	
	41	88824-10901	BACKET-REAR SEAT BACK HOLDER(L.H.)	2	5	WAGON 411	
	42	88825-10900	PIECE-REAR SEAT BACK HOLDER	2	2	WAGON 411	
	43	00114-41610	BOLT	4	50	WAGON 411	
	44	00915-11410	WAGHER-LOCK	4		WAGON 411	
	45	00915-41410	WASHER-PLAIN	4		WAGON 411	
	46	88826-10900	CLAMP-REAR SEAT BACK STAY	2	1	WAGON 411	
	47	88827-10900	CLAMP-RUBBER,REAR SEAT BACK STAY	2	10	WAGON 411	

Printed in Japan

REVISED: SEPTEMBER,1968

S	KEY NO.	PART NO.	PART NAME	Q'TY	SALES UNIT	MODEL	ICA
	48	00514-01010	SCREW	4	50	WAGON 411	
	49	00915-41010	WASHER-PLAIN	4		WAGON 411	
*	50	88810-10950	SET-CATCHER,REAR SEAT BACK(TO C/# WP411-813230,WPL411-805540)	2	1	WAGON 411	
	51	88810-17450	SET-CATCHER,REAR SEAT BACK R.H.(FROM C/# WP411-813231,WPL411-805541)	1	1	WAGON 411	N
*	52	88810-10950	SET-CATCHER,REAR SEAT BACK(TO C/# WP411-813230,WPL411-805540)	2	1	WAGON 411	
	53	88813-17450	SET-CATCHER,REAR SEAT BACK L.H.(FROM C/# WP411-813231,WPL411-805541)	1	10	WAGON 411	N
	54	88810-19850	SET-CATCHER,REAR SEAT BACK R.H.(FROM C/# WP411-823053,WPL411-804240)	1		WAGON U.S.A.411	
	55	88813-19850	SET-CATCHER,REAR SEAT BACK L.H.(FROM C/# WP411-82305	1		WAGON U.S.A.411	
	56	00114-41610	BOLT	4	50	WAGON 411	
	57	00915-11410	WASHER-LOCK	4		WAGON 411	
	58	88801-10901	HINGE-REAR SEAT BACK	2	1	WAGON 411	
	59	88803-10900	PROTECTOR-HINGE,REAR SEAT	2	1	WAGON 411	
	60	00911-31510	NUT	4	50	WAGON 411	
	61	00915-11510	WASHER-LOCK	4		WAGON 411	
	62	00915-41510	WASHER-PLAIN	4		WAGON 411	
	63	74920-10901	ASSY-MAT,AUXILIARY FLOOR(FROM SEPT.-'64)	1		WAGON 411	
	64	74920-17400	ASSY-MAT,AUXILIARY FLOOR(FROM WP411-814341,WPL411-805541)	1		WAGON 411	N

Printed in Japan

REVISED: SEPTEMBER,1968

S.	KEY NO.	PART NO.	PART NAME	Q'TY	SALES UNIT	MODEL	ICA
	65	61224-35210	FASTENER-MALE	4	1	WAGON 411	
	66	88819-10901	STOPPER-REAR SEAT BACK	1	1	WAGON 411	
	67	00336-81200	SCREW	8		WAGON 411	

Printed in Japan

REVISED: SEPTEMBER,1968

NOTE

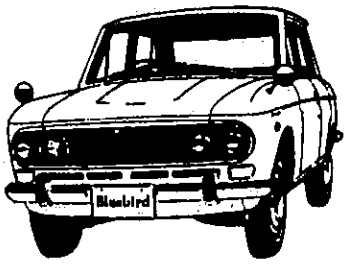

NOTE

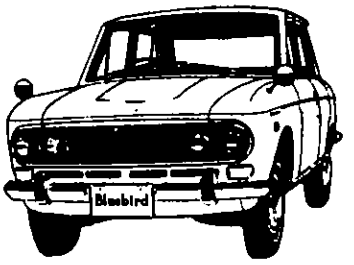

CYLINDER LOCK & KEY

Note: This figure will be given later.

S	KEY NO.	PART NO.	PART NAME	Q'TY	SALES UNIT	MODEL	ICA
			CYLINDER LOCK & KEY				
*	1	80010-11401	SET-CYLINDER,LOCK&KEY	1		411 UTK	
	2	68630-11400	ASSY-LOCK,GLOVE BOX LID	1	5	411 UTK	
	3	84460-10600	ASSY-CYLINDER,TRUNK LID LOCK	1		411 UTK	
	4	25150-10600	COMP.-SWITCH,IGNITION&STARTER	1	1	411 UTK	
	5	80600-10600	ASSY-CYLINDER,DOOR LOCK(R.H.)	1		411 UTK	
	6	80601-10600	ASSY-CYLINDER,DOOR LOCK(L.H.)	1	1	411 UTK	
	7	84360-11400	ASSY-LOCK,FUEL FILLER LID	1	1	411 UTK	
*	8	80590-10600	CLIP-RETAINING,CYLINDER LOCK	4	10	411 UTK	
	9	80590-10601	CLIP-RETAINING,CYLINDER LOCK	1	10	411 UTK	
	10	80010-10803	SET-CYLINDER,LOCK&KEY(TO MAR-66)	1		SEDAN(C TYPE)411	
	11	80010-18700	SET-CYLINDER,LOCK&KEY(FROM APR.-'66)	1	1	SEDAN(C TYPE)411	N
	12	80010-10804	SET-CYLINDER,LOCK&KEY(TO MAR-66)	1	1	SEDAN(A,B TYPE)411	
	13	80010-18400	SET-CYLINDER,LOCK&KEY(FROM APR.-'66)	1	1	SEDAN(A,B TYPE)411	N
	14	68630-10800	ASSY-LOCK,GLOVE BOX LID	1		411 C TYPE	
	15	84460-10600	ASSY-CYLINDER,TRUNK LID LOCK	1		411 A,B,C TYPE	
	16	25150-10600	COMP.-SWITCH,IGNITION&STARTER	1	1	411 A,B,C TYPE	

Printed in Japan

REVISED: SEPTEMBER,1968

S	KEY NO.	PART NO.	PART NAME	Q'TY	SALES UNIT	MODEL	ICA
	17	80600-10600	ASSY-CYLINDER,DOOR LOCK(R.H.)	1		411 A,B,C TYPE	
	18	80601-10600	ASSY-CYLINDER,DOOR LOCK(L.H.)	1	1	411 A,B,C TYPE	
	19	84360-11400	ASSY-LOCK,FUEL FILLER LID	1	1	411 A,B,C TYPE	
	20	80590-10601	CLIP-RETAINING,CYLINDER LOCK	5	10	411 C TYPE	
	21	80590-10601	CLIP-RETAINING,CYLINDER LOCK	4	10	411 A,B TYPE	
	22	80010-10900	SET-CYLINDER,LOCK&KEY(TO MAR-66)	1		WAGON(B TYPE)411	
	23	80010-19801	SET-CYLINDER,LOCK&KEY(FROM APR.-'66)	1	1	WAGON(B TYPE)411	Y
	24	68630-10800	ASSY-LOCK,GLOVE BOX LID	1		WAGON (B TYPE)411	
	25	96807-10900	ASSY-CYLINDER,TAIL GATE LOCK	1	1	WAGON (B TYPE)411	
	26	25150-10600	COMP.-SWITCH,IGNITION&STARTER	1	1	WAGON 411(B TYPE)	
	27	80600-10600	ASSY-CYLINDER,DOOR LOCK(R.H.)(TO MAR-66)	1		WAGON(B TYPE)411	
	28	80600-18400	ASSY-CYLINDER,DOOR LOCK(R.H.)(FROM APR.-'66)	1	1	WAGON(B TYPE)411	Y
	29	80601-10600	ASSY-CYLINDER,DOOR LOCK(L.H.)(TO MAR-66)	1	1	WAGON(B TYPE)411	
	30	80601-18400	ASSY-CYLINDER,DOOR LOCK(L.H.)(FROM APR.-'66)	1	1	WAGON(B TYPE)411	Y
*	31	80590-10600	CLIP-RETAINING,CYLINDER LOCK	4	10	WAGON(B TYPE)411	
	32	80010-11000	SET-CYLINDER,LOCK&KEY(TO MAR-66)	1		WAGON(A TYPE)411	
	33	80010-19800	SET-CYLINDER,LOCK&KEY(FROM APR.-'66)	1	1	WAGON(A TYPE)411	Y

Printed in Japan

REVISED: SEPTEMBER,1968

S	KEY NO.	PART NO.	PART NAME	Q'TY	SALES UNIT	MODEL	ICA
	34	96807-10900	ASSY-CYLINDER,TAIL GAT E LOCK	1	1	WAGON(A TY PE)411	
	35	25150-10600	COMP.-SWITCH,IGNITION& STARTER	1	1	WAGON(A TY PE)411	
	36	80600-10600	ASSY-CYLINDER,DOOR LOC K(R.H.)(TO MAR-66)	1		WAGON(A TY PE)411	
	37	80600-18400	ASSY-CYLINDER,DOOR LOC K(R.H.)(FROM APR.-'66)	1	1	WAGON(A TY PE)411	Y
	38	80601-10600	ASSY-CYLINDER,DOOR LOC K(L.H.)(TO MAR-66)	1	1	WAGON(A TY PE)411	
	39	80601-18400	ASSY-CYLINDER,DOOR LOC K(L.H.)(FROM APR.-'66)	1	1	WAGON(A TY PE)411	Y
	40	80590-10601	CLIP-RETAINING,CYLINDE R LOCK	3	10	WAGON(A TY PE)411	
	41	80010-24601	SET-CYLINDER,LOCK&KEY	1	1	411 WRL-UT K,WRL-UAK	
	42	96807-10900	ASSY-CYLINDER,TAIL GAT E LOCK	1	1	411 WRL-UT K,WRL-UAK	
	43	25150-10600	COMP.-SWITCH,IGNITION& STARTER	1	1	411 WRL-UT K,WRL-UAK	
	44	80600-18400	ASSY-CYLINDER,DOOR LOC K(R.H.)	1	1	411 WRL-UT K,WRL-UAK	
	45	80601-18400	ASSY-CYLINDER,DOOR LOC K(L.H.)	1	1	411 WRL-UT K,WRL-UAK	
	46	80590-10600	CLIP-RETAINING,CYLINDE R LOCK	1	10	411 WRL-UT K,WRL-UAK	
	47	80010-24600	SET-CYLINDER,LOCK&KEY(INC.80010-24601,68630-10800)	1	1	OP.411 WRL -UTK,WRL-U AK	
	48	KEY00-00017	KEY-BLANK,LONG(TYPE 1)	1	1	411	
	49	KEY00-00021	KEY-BLANK,SHORT(TYPE 1)	1	1	411	
	50	KEY00-00019	KEY-BLANK,LONG(TYPE 3)	1	1	411	
	51	KEY00-00023	KEY-BLANK,SHORT(TYPE 3)	1	1	411	

Printed in Japan

REVISED: SEPTEMBER,1968

S	KEY NO.	PART NO.	PART NAME	Q'TY	SALES UNIT	MODEL	ICA
	52	KEY00-00018	BLANK,LONG(TYPE 4)	1	1	411	
	53	KEY00-00022	KEY-BLANK,SHORT(TYPE 4)	1	1	411	
	54	KEY00-00016	KEY-BLANK,LONG(TYPE 9)	1	1	411	
	55	KEY00-00020	KEY-BLANK,SHORT(TYPE 9)	1	1	411	

Printed in Japan

REVISED: SEPTEMBER,1968

NOTE

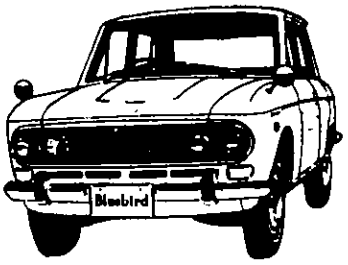

TOOL KITS

(From Feb. -'67) signifies:
from C/# P411-174350
PL411-51162
RL411-8678
WP411-823545
WPL411-803078
WRL411-82237

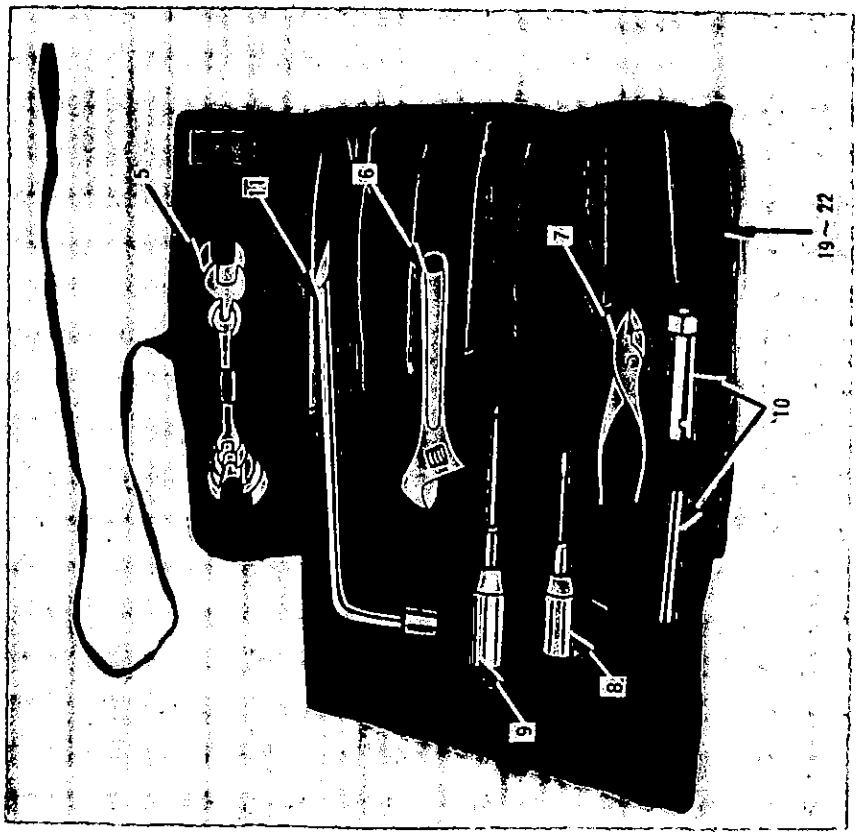

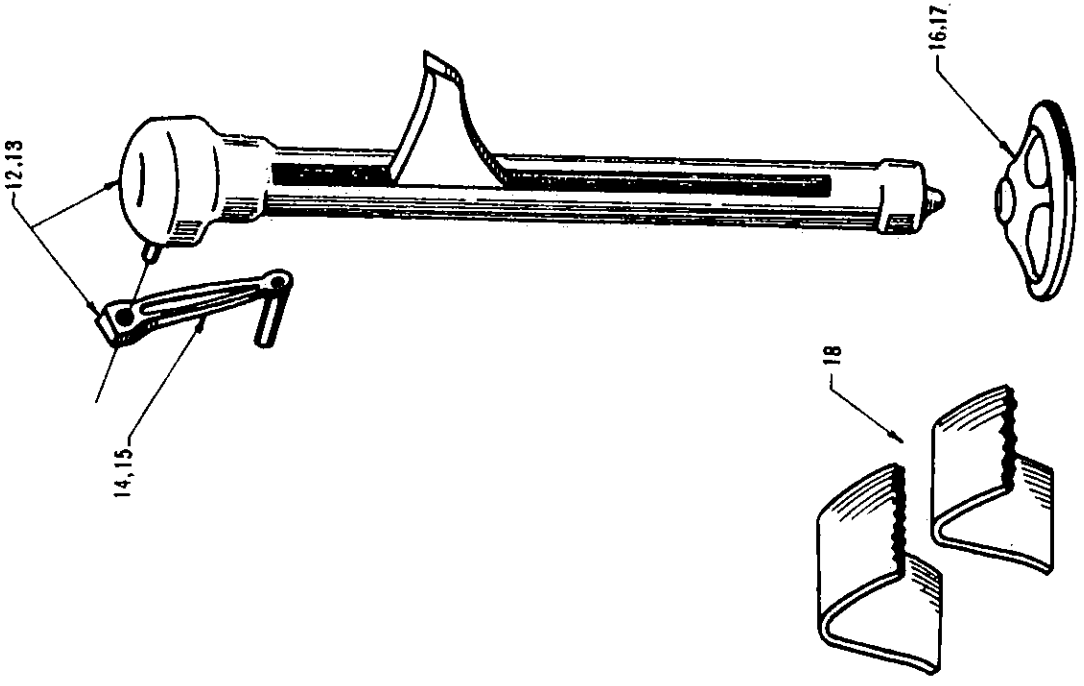

S	KEY NO.	PART NO.	PART NAME	Q'TY	SALES UNIT	MODEL	ICA
			TOOL KITS				
#	1	99500-16500	KIT-TOOLS(TO JAN-67)	1		411(EXC.U.S.A.)	
#	2	99500-24000	KIT-TOOLS(FROM FEB.-'67)	1		411(EXC.U.S.A.)	N
#	3	99500-17000	KIT-TOOLS(TO JAN-67)	1		411 U.S.A.	
#	4	99500-19101	KIT-TOOLS(FROM FEB.-'67)	1		411 U.S.A.	N
#	5	99512-73000	SET-SPANNER	1		411(EXC.U.S.A.)	
#	6	99520-73000	WRENCH-MONKEY	1		411(EXC.U.S.A.)	
#	7	99525-73000	PLIER	1		411(EXC.U.S.A.)	
#	8	99530-73000	DRIVER-MINUS	1		411(EXC.U.S.A.)	
#	9	99535-73000	DRIVER-PLUS	1		411(EXC.U.S.A.)	
#	10	99540-73000	WRENCH-SPARK PLUG	1		411(EXC.U.S.A.)	
#	11	99545-16500	RENCH-WHEEL NUT	1		411	
#	12	99550-10600	SET-JACK(TO JAN-67)	1		411	
#	13	99550-24000	SET-JACK(FROM FEB.-'67)	1		411	N
	14	99553-08300	HANDLE-JACK(TO JAN-66)	1		411	
#	15	99553-24000	HANDLE-JACK(FROM FEB.-'66)	1		411	N
	16	57216-10600	ASSY-CLAMP,SPARE TIRE(TO JAN-66)	1	10	411	
	17	57216-24000	ASSY-CLAMP,SPARE TIRE(FROM FEB.-'66)	1	5	411	N

REVISED: SEPTEMBER,1968

Printed in Japan

S	KEY NO.	PART NO.	PART NAME	Q'TY	SALES UNIT	MODEL	ICA
	18	99595-10600	STOPPER-TIRE	2	1	411	
#	19	99595-73000	BAG-TOOL(TO JAN-67)	1		411(EXC.U.S.A.)	
#	20	99595-24000	BAG-TOOL(FROM FEB-67)	1		411(EXC.U.S.A.)	N
#	21	99595-75000	BAG-TOOL(TO JAN-67)	1		411 U.S.A.	
#	22	99595-19100	BAG-TOOL(FROM FEB.-'67)	1		411 U.S.A.	N
#	23	99560-75000	ASSY-GAUGE,TIRE(1B/KG)	1		OP.411	
#	24	SBNLL-C0001	N.L.COOLANT 2 LITER(0.44 U.S.GAL)	1		411	
#	25	SBNLL-C0002	N.L.COOLANT 4 LITER(0.88 U.S.GAL)	1		411	
#	26	SBNLL-C0002	N.L.COOLANT 18 LITER(3.96 U.S.GAL)	1		411	

Printed in Japan

REVISED: SEPTEMBER,1968

NOTE

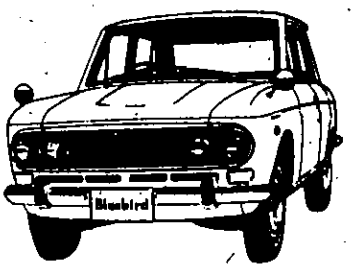

MISCELLENEOUS

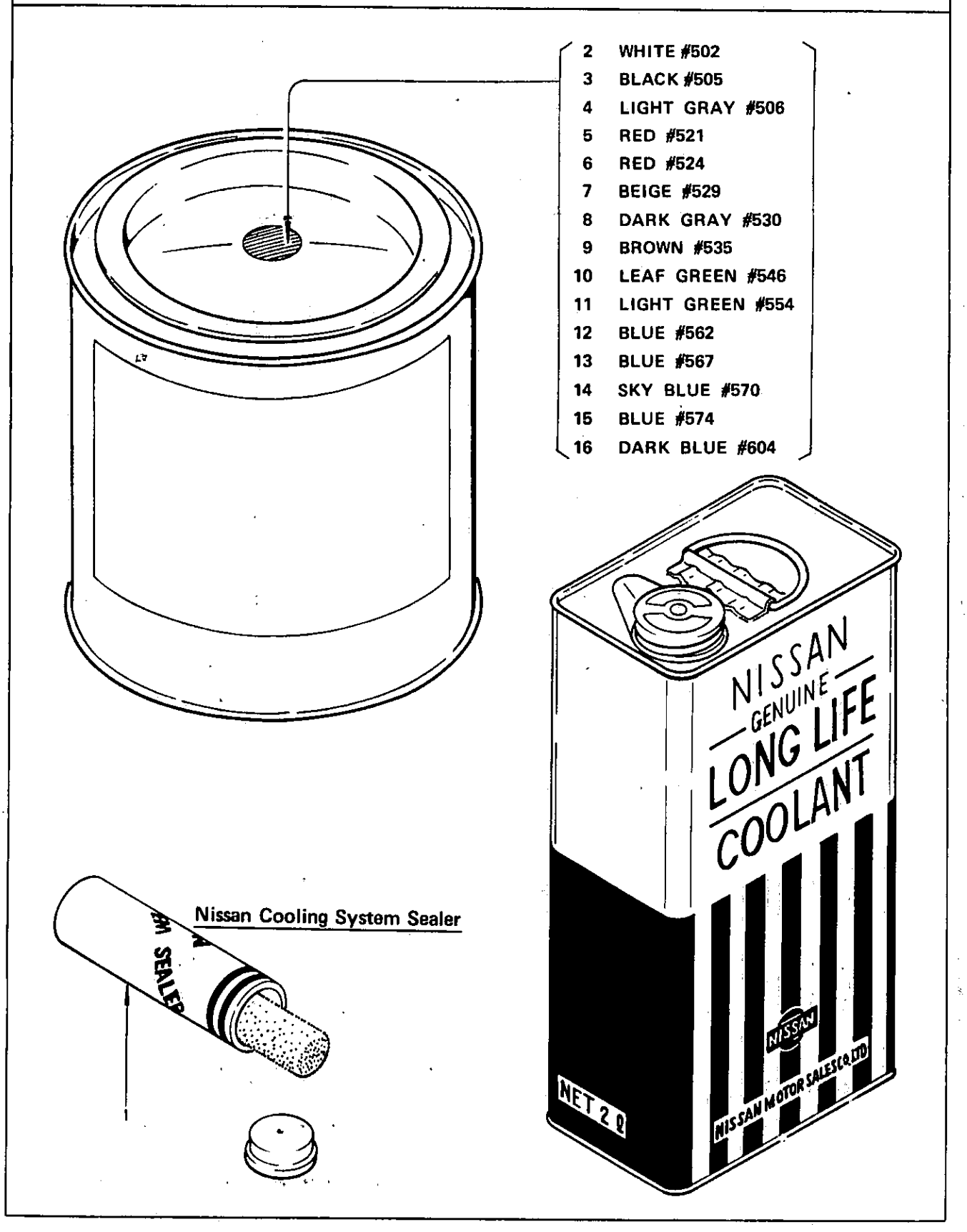

S	KEY NO.	PART NO.	PART NAME	Q'TY	SALES UNIT	MODEL	ICA
			MISCELLENEOUS				
	1	10125-62200	N.C.S.SEALER(1 CARTON-96 PRICES)	96		411	
	2	PAINT-DN502	WHITE #502	1	1	411	
	3	PAINT-DN505	BLACK #505	1	1	411	
	4	PAINT-DN506	LIGHT GRAY #506	1	1	411	
	5	PAINT-DN521	RED #521	1	1	411	
	6	PAINT-DN524	RED #524	1	1	411	
	7	PAINT-DN529	BEIGE #529	1		411	
	8	PAINT-DN530	DARK GRAY #530	1	1	411	
	9	PAINT-DN535	BROWN #535	1	1	411	
	10	PAINT-DN546	LEAF GREEN #546	1	1	411	
	11	PAINT-DN554	LIGHT GREEN #554	1	1	411	
	12	PAINT-DN562	BLUE #562	1	1	411	
	13	PAINT-DN567	BLUE #567	1	1	411	
	14	PAINT-DN570	SKY BLUE #570	1	1	411	
	15	PAINT-DN574	BLUE #574	1	1	411	
	16	PAINT-DN604	DARK BLUE #604	1	1	411	

Printed in Japan

REVISED: SEPTEMBER,1968

NOTE

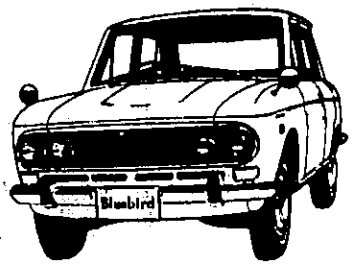

PART NO.	PAGE	PART NO.	PAGE
			263- - 6
		BWC00-00015	262- - 2
BWB00-00009	262- - 1	BWC00-00016	262- - 2
BWB00-00014	262- - 2	BWC00-00018	262- - 2
BWB00-00125	263- - 5	BWC00-00022	262- - 2
BWB00-00128	263- - 5	BWC00-00023	262- - 2
BWB00-00130	263- - 5	BWC00-00025	262- - 2
BWB00-00131	263- - 5	BWC00-00026	262- - 2
BWB00-00132	263- - 5	BWC00-00027	262- - 2
BWB00-00133	263- - 5	BWC00-00029	262- - 2
BWB00-00136	263- - 5	BWC00-00030	262- - 3
BWB00-00177	264- - 1	BWC00-00031	262- - 3
BWB00-00213	264- - 2	BWC00-00038	263- - 3
BWB00-00214	264- - 3	BWC00-00043	262- - 3
BWB00-00302	263- - 8	BWC00-00044	262- - 3
BWC00-00001	262- - 1	BWC00-00045	262- - 3
BWC00-00002	262- - 1	BWC00-00047	262- - 3
BWC00-00003	262- - 1	BWC00-00049	263- - 1
BWC00-00004	262- - 1	BWC00-00052	263- - 1
BWC00-00005	262- - 1	BWC00-00055	263- - 1
BWC00-00006	262- - 1	BWC00-00056	263- - 1
BWC00-00008	262- - 1	BWC00-00057	263- - 1
BWC00-00010	262- - 1	BWC00-00058	263- - 1
BWC00-00011	262- - 1	BWC00-00059	263- - 1
BWC00-00012	262- - 1		263- - 1
BWC00-00013	262- - 1	BWC00-00060	263- - 1

Printed in Japan

PART NO.	PAGE
	.....264- - 2
BWC00-00061	.....263- - 1
BWC00-00062	.....263- - 1
BWC00-00064	.....263- - 1
BWC00-00066	.....263- - 1
BWC00-00068	.....263- - 1
BWC00-00069	.....263- - 2
BWC00-00070	.....263- - 2
BWC00-00071	.....263- - 2
BWC00-00072	.....263- - 2
	.....263- - 4
BWC00-00073	.....263- - 2
BWC00-00075	.....263- - 2
BWC00-00076	.....263- - 2
BWC00-00077	.....263- - 2
BWC00-00078	.....263- - 2
BWC00-00079	.....263- - 2
BWC00-00080	.....263- - 2
BWC00-00081	.....263- - 2
BWC00-00082	.....263- - 2
BWC00-00083	.....263- - 2
BWC00-00084	.....263- - 2
BWC00-00085	.....263- - 2
BWC00-00087	.....263- - 3
	.....263- - 4
BWC00-00088	.....263- - 3
BWC00-00089	.....263- - 3
BWC00-00090	.....263- - 3
BWC00-00091	.....263- - 3
BWC00-00092	.....263- - 3
BWC00-00095	.....263- - 3
BWC00-00097	.....263- - 3
BWC00-00098	.....263- - 3
BWC00-00099	.....263- - 3
	.....263- - 7
BWC00-00100	.....263- - 3
BWC00-00101	.....263- - 3
BWC00-00102	.....263- - 3
BWC00-00103	.....263- - 3
BWC00-00104	.....263- - 3
BWC00-00105	.....263- - 3
BWC00-00106	.....263- - 4
BWC00-00108	.....263- - 4
BWC00-00109	.....263- - 4
BWC00-00110	.....263- - 4
BWC00-00111	.....263- - 4
BWC00-00113	.....263- - 4
BWC00-00114	.....263- - 4
BWC00-00115	.....263- - 4
BWC00-00118	.....263- - 4
BWC00-00119	.....263- - 4
BWC00-00122	.....263- - 4

Printed in Japan

PART NO.	PAGE	PART NO.	PAGE
BWC00-00123	263- - 4	BWC00-00168	263- - 7
BWC00-00126	263- - 5	BWC00-00169	263- - 7
BWC00-00127	263- - 5	BWC00-00179	264- - 1
BWC00-00129	263- - 5	BWC00-00180	264- - 1
BWC00-00134	263- - 5	BWC00-00181	264- - 1
BWC00-00135	263- - 5	BWC00-00183	264- - 1
BWC00-00137	263- - 5	BWC00-00184	264- - 1
BWC00-00138	263- - 5	BWC00-00187	264- - 1
BWC00-00140	263- - 6	BWC00-00188	264- - 1
BWC00-00141	263- - 6	BWC00-00190	264- - 1
BWC00-00143	263- - 6	BWC00-00191	264- - 1
BWC00-00148	263- - 6	BWC00-00192	264- - 1
BWC00-00149	263- - 6	BWC00-00193	264- - 1
BWC00-00150	263- - 6	BWC00-00196	264- - 2
BWC00-00151	263- - 6	BWC00-00197	264- - 2
BWC00-00152	263- - 6	BWC00-00198	264- - 2
BWC00-00153	263- - 6	BWC00-00199	264- - 2
BWC00-00157	263- - 6	BWC00-00201	264- - 2
BWC00-00158	263- - 6		264- - 2
BWC00-00160	263- - 7	BWC00-00203	264- - 2
BWC00-00161	263- - 7	BWC00-00204	264- - 2
BWC00-00162	263- - 7	BWC00-00205	264- - 2
BWC00-00163	263- - 7	BWC00-00206	264- - 2
BWC00-00164	263- - 7	BWC00-00207	264- - 2
	264- - 1	BWC00-00208	264- - 2
BWC00-00166	263- - 7	BWC00-00209	264- - 2

Printed in Japan

PART NO.	PAGE	PART NO.	PAGE
BWC00-00210	264- - 2	BWE00-00138	263- - 5
BWC00-00212	264- - 2	BWE00-00186	264- - 1
BWC00-00224	263- - 7	BWH00-00007	262- - 1
BWC00-00229	263- - 7	BWH00-00019	262- - 2
BWC00-00230	263- - 7	BWH00-00024	262- - 2
BWC00-00231	263- - 8	BWH00-00028	262- - 2
BWC00-00238	263- - 8	BWH00-00107	263- - 4
BWC00-00240	263- - 8	BWH00-00145	263- - 6
BWC00-00241	263- - 8	BWH00-00146	263- - 6
BWC00-00303	263- - 8	BWK00-00019	262- - 2
BWD00-00017	262- - 2	B0260-10601	29- - 2
BWD00-00020	262- - 2	B5330-10601	231- - 2
BWD00-00021	262- - 2	B6260-10600	29- - 2
BWD00-00046	262- - 3	B6310-89900	231- - 4
BWD00-00075	263- - 2	B6330-89900	231- - 4
BWD00-00124	263- - 4	B7010-11400	232- - 1
BWD00-00128	263- - 5	B7010-11402	232- - 2
BWD00-00139	263- - 6	B7010-11403	232- - 2
BWD00-00147	263- - 6	B7010-11405	232- - 1
BWD00-00154	263- - 6	B7010-11406	232- - 1
BWD00-00159	263- - 7	B7010-11407	232- - 1
BWD00-00167	263- - 7	B7010-11408	232- - 1
BWD00-00179	264- - 1	B7010-13600	232- - 2
BWD00-00222	263- - 7	B7010-13601	232- - 1
BWE00-00124	263- - 4	B7010-13602	232- - 1
BWE00-00137	263- - 5		

Printed in Japan

PART NO.	PAGE	PART NO.	PAGE
KEY00-00016	310- - 4	NOT - SALE	203- - 1
KEY00-00017	310- - 3		203- - 1
KEY00-00018	310- - 4		203- - 1
KEY00-00019	310- - 3		204- - 5
KEY00-00020	310- - 4		236- - 2
KEY00-00021	310- - 3		263- - 1
KEY00-00022	310- - 4		
KEY00-00023	310- - 3		

Printed in Japan.

PART NO.	PAGE	PART NO.	PAGE
PAINT-DN502	312- - 1	SBNLL-C0001	311- - 2
PAINT-DN505	312- - 1	SBNLL-C0002	311- - 2
PAINT-DN506	312- - 1		311- - 2
PAINT-DN521	312- - 1		
PAINT-DN524	312- - 1		
PAINT-DN529	312- - 1		
PAINT-DN530	312- - 1		
PAINT-DN535	312- - 1		
PAINT-DN546	312- - 1		
PAINT-DN554	312- - 1		
PAINT-DN562	312- - 1		
PAINT-DN567	312- - 1		
PAINT-DN570	312- - 1		
PAINT-DN574	312- - 1		
PAINT-DN604	312- - 1		

Printed in Japan

INDEX (CLASSFIED BY PARTS NO.)

PART NO.	PAGE	PART NO.	PAGE
SBNLL-C0001	311- - 2	X0000-H1848	233- - 1
SBNLL-C0002	311- - 2	X0000-W260A	233- - 1
[illegible]	311- - 2	X6010-14625	213- - 6
		X6010-14626	213- - 6
		X6010-14628	213- - 6
		X6010-16525	212- - 5
		X6010-16526	212- - 5
		X6010-16528	212- - 5
		X6010-16537	212- - 5
		X7010-12225	216- - 4
		X7010-13925	216- - 4
		X7010-13926	216- - 4
		X9010-33350	232- - 1
		X9010-33354	232- - 1

Printed in Japan

STANDARD PARTS

PART NO.	PAGE
00111-41010	56- - 2
	203- - 3
	203- - 3
	203- - 3
	203- - 4
	260- - 2
00111-41410	211- - 1
00111-41800	205- - 1
00111-42000	7- - 1
	8- - 1
	210- - 1
00111-42210	7- - 1
	8- - 1
	210- - 1
00111-43800	205- - 2
00111-44000	8- - 1
	210- - 1
00111-51200	216- - 4
00111-51410	209- - 2
00111-51610	64- - 2
	275- - 2
00111-52200	211- - 2
00111-52510	256- - 4
00111-56010	222- - 3
00114-40810	2- - 4
00114-41010	2- - 4
	84- - 2
	87- - 4
	202- - 4
	296- - 2
	299- - 3
00114-41210	5- - 2
	12- - 1
	36- - 1
	65- - 2
	79- - 3
	92- - 3
	206- - 3
	214- - 2
	214- - 2
	232- - 2
	236- - 1
	276- - 2
	287- - 3
	290- - 3
	303- - 3
00114-41410	79- - 5
	290- - 5
00114-41610	76- - 1
	76- - 2

Printed in Japan

PART NO.	PAGE
	76- - 4
	77- - 2
	79- - 5
	96- - 2
	96- - 3
	256- - 4
	287- - 1
	287- - 2
	288- - 2
	290- - 5
	309- - 3
	309- - 4
00114-41810	79- - 5
	290- - 6
00114-42010	4- - 1
	28- - 1
	209- - 1
	228- - 1
00114-42510	19- - 2
	77- - 1
	222- - 3
	288- - 1
00114-43010	64- - 1
	275- - 1
00114-43210	16- - 1
	216- - 1
00114-43810	4- - 1
	7- - 1
	205- - 2
00114-51010	209- - 2
00114-51610	18- - 2
	46- - 2
	46- - 2
	76- - 2
	77- - 1
	84- - 1
	215- - 1
	221- - 2
	221- - 2
	287- - 2
	288- - 1
	296- - 2
00114-51800	20- - 1
	223- - 1
00114-51810	69- - 2
	280- - 2
00114-52010	2- - 4
	2- - 5
	18- - 2
	21- - 1
	75- - 3
	76- - 2

Printed in Japan

PART NO.	PAGE
	87- - 2
	90- - 2
	91- - 2
	92- - 1
	94- - 1
	202- - 4
	202- - 4
	202- - 5
	224- - 2
	286- - 3
	287- - 2
	299- - 3
	302- - 3
	302- - 6
	303- - 1
	305- - 1
00114-52210	2- - 3
	18- - 3
	18- - 4
	51- - 1
	221- - 2
	221- - 3
	252- - 2
	256- - 1
00114-52510	16- - 3
	18- - 1
	18- - 3
	18- - 4
	18- - 4
	218- - 3
	228- - 2
	252- - 3
	252- - 3
	256- - 2
	256- - 2
00114-52810	221- - 2
00114-52910	221- - 3
00114-53010	46- - 2
	256- - 2
00114-53210	256- - 2
00114-53510	18- - 3
	18- - 4
	19- - 2
	222- - 3
	256- - 1
00114-54510	2- - 5
	202- - 6
	256- - 2
00114-54810	221- - 1
00114-55010	18- - 1
	19- - 2
	222- - 3

Printed in Japan

PART NO.	PAGE
00114-55510	21- - 2
	224- - 2
00114-56510	18- - 3
	221- - 3
00114-57010	18- - 3
	221- - 3
00114-61600	209- - 2
00114-62210	21- - 1
	224- - 1
00114-62800	224- - 1
00114-63510	51- - 1
	252- - 1
00114-78510	21- - 2
	224- - 2
00115-11510	221- - 2
00124-26760	253- - 4
00124-41610	222- - 3
00124-51810	73- - 2
	73- - 3
	284- - 1
00124-52010	66- - 1
	69- - 3
	277- - 2
	280- - 3
	284- - 3
00124-52200	49- - 3
	247- - 2
00124-52210	57- - 1
	62- - 3
	248- - 2
	265- - 2
	272- - 3
00124-52500	73- - 1
00124-52510	67- - 1
	266- - 1
	278- - 1
00124-53010	6- - 2
00124-53510	52- - 2
	73- - 1
	208- - 1
	255- - 2
00124-54040	51- - 2
	252- - 2
00124-62010	202- - 3
00124-62210	2- - 3
00124-62510	62- - 3
	272- - 4
00124-63010	249- - 1
00124-63510	28- - 4
	228- - 4
00124-73510	67- - 4
	278- - 4

Printed in Japan

PART NO.	PAGE
00124-74010	67- - 4
	278- - 3
00124-76510	74- - 3
	285- - 2
00131-37000	206- - 1
00131-41810	203- - 6
00131-42210	203- - 6
00131-57000	5- - 1
00131-62510	229- - 3
00131-66010	256- - 4
00131-88000	203- - 1
00134-51810	28- - 2
	228- - 2
	228- - 3
00134-52010	21- - 1
00134-52510	21- - 1
	28- - 3
	28- - 4
	224- - 1
	228- - 3
	228- - 5
00134-52800	3- - 2
	204- - 3
00134-53010	28- - 3
	228- - 3
00134-53510	228- - 2
	228- - 5
00134-54010	28- - 5
	67- - 2
	228- - 5
	228- - 5
	278- - 2
00134-54510	228- - 6
00134-62200	3- - 3
	204- - 5
00134-62210	21- - 1
00134-62510	21- - 1
	204- - 5
	224- - 1
00134-64010	67- - 3
	278- - 3
00134-65010	67- - 2
	278- - 2
00134-66010	67- - 2
	278- - 2
00134-86500	2- - 1
	202- - 1
00154-83510	75- - 2
	90- - 1
	302- - 2
00214-41410	6- - 1
	208- - 1

Printed in Japan

PART NO.	PAGE
00214-44510	6- - 1
00214-44810	208- - 1
00214-51410	213- - 6
00214-52000	6- - 1
00214-52510	6- - 1
	203- - 2
00214-52800	6- - 1
	208- - 1
	208- - 2
00214-54010	5- - 1
	206- - 1
00214-54210	209- - 1
00214-54510	208- - 1
00214-62210	203- - 2
	211- - 3
00214-62810	2- - 2
	211- - 2
00214-65010	203- - 2
00224-41610	203- - 6
00224-52810	207- - 2
00224-53200	207- - 2
00253-41810	2- - 4
	202- - 5
00253-52510	2- - 2
00253-62510	202- - 2
00254-52010	206- - 1

PART NO.	PAGE
00254-52200	5- - 1
00254-52500	206- - 1
00254-52800	5- - 1
	206- - 1
00264-77000	207- - 1
00284-52200	51- - 2
	252- - 3
00310-61010	72- - 2
	283- - 3
00310-61210	97- - 4
	307- - 5
00310-61610	72- - 3
	283- - 3
00310-62020	283- - 1
00310-80620	84- - 4
	87- - 4
	296- - 3
	299- - 4
00310-80810	16- - 2
	16- - 2
	218- - 2
	218- - 2
00311-41410	5- - 2
	206- - 3
00314-00810	30- - 2
	86- - 2

Printed in Japan

PART NO.	PAGE
	89- - 1
	97- - 7
	97- - 9
	231- - 2
	298- - 1
	301- - 1
	307-U- 1
00314-01010	66- - 3
	91- - 2
	277- - 4
	302- - 6
00314-01210	17- - 1
	79- - 1
	79- - 6
	79- - 6
	86- - 3
	89- - 2
	91- - 1
	97- - 4
	213- - 8
	219- - 1
	220- - 1
	220- - 3
	220- - 4
	290- - 1
	290- - 7
	290- - 7
	301- - 2
	302- - 5
	307- - 4
00314-01220	84- - 4
	87- - 4
	296- - 4
	299- - 4
00314-01410	216- - 4
00314-01610	30- - 2
	231- - 2
00314-01620	85- - 1
	88- - 1
	297- - 1
	300- - 1
00314-02210	31- - 1
	231- - 3
00314-03010	36- - 2
	232- - 1
	236- - 2
00314-05010	37- - 2
	239- - 3
00314-41010	86- - 3
	89- - 3
	298- - 3
	301- - 3

Printed in Japan

PART NO.	PAGE
00314-41210	28- - 3
	75- - 1
	228- - 4
	229- - 2
	286- - 1
00314-41410	77- - 1
	288- - 1
00314-41610	18- - 2
	18- - 4
	28- - 4
	76- - 2
	91- - 1
	92- - 2
	93- - 2
	93- - 3
	97- - 6
	220- - 2
	228- - 4
	229- - 2
	287- - 2
	302- - 4
	303- - 2
	304- - 2
	304- - 4
	308- - 5
00314-42010	35- - 2
	235- - 3
00314-51610	97- - 7
	307-0- 1
00314-52210	31- - 2
	231- - 4
00314-62810	202- - 2
00319-01010	64- - 2
	275- - 3
00324-00810	86- - 1
	89- - 1
	89- - 1
	298- - 1
	301- - 1
	301- - 1
00324-01210	93- - 3
	304- - 3
00324-41210	93- - 3
	304- - 4
00324-41410	68- - 1
	70- - 2
	279- - 1
	281- - 2
00324-41610	28- - 1
	94- - 1
	228- - 1
	305- - 1

Printed in Japan

PART NO.	PAGE
00324-42000	93- - 3
	304- - 4
00324-43010	86- - 2
	89- - 2
	298- - 2
	301- - 2
00324-52010	92- - 2
	303- - 3
00330-61010	72- - 3
	283- - 3
00330-61410	72- - 2
	283- - 3
00330-82520	97- - 3
	307- - 4
00334-00810	97- - 3
00334-01220	78- - 2
	289- - 2
00334-01610	91- - 4
	302- - 8
00334-02000	213- - 7
00334-41610	92- - 2
	303- - 2
00336-81200	309- - 5
00336-81220	96- - 3
00344-51610	76- - 2
	287- - 2
00349-01210	220- - 2
00367-41210	229- - 1
00369-01200	11- - 5
00369-01210	17- - 2
	17- - 2
	29- - 2
	219- - 2
	219- - 3
	230- - 2
00369-02500	11- - 4
00369-41210	270- - 1
00369-51610	13- - 1
	215- - 1
00414-01010	240- - 2
00414-43010	85- - 3
	297- - 3
	300- - 6
00434-01020	81- - 2
00434-01620	78- - 2
	289- - 2
	292- - 5
00434-02020	81- - 3
00434-02510	292- - 5
00469-01210	79- - 4
	290- - 4
00510-61010	42- - 1

Printed in Japan

PART NO.	PAGE
	81- - 7
	81- - 8
	292- - 9
	292- - 9
	292- -10
00510-62610	245- - 1
00511-01010	31- - 2
	75- - 5
	231- - 4
	231- - 4
	286- - 5
00511-01610	219- - 1
	220- - 1
00511-21010	31- - 1
	31- - 2
	231- - 4
	231- - 5
00511-41010	244- - 1
00513-80720	84- - 4
	296- - 3
00514-01010	79- - 6
	96- - 2
	290- - 7
	309- - 4
00515-11410	222- - 4
00520-61010	93- - 5

PART NO.	PAGE
	304- - 6
00530-40710	93- - 2
	304- - 2
00530-60710	85- - 1
	88- - 1
	297- - 1
	300- - 1
00530-61010	80- - 2
	81- - 7
	82- - 6
	93- - 5
	291- - 2
	292- - 9
	304- - 6
00530-61020	93- - 4
	93- - 5
	304- - 4
	304- - 6
00530-61310	81- - 8
	292- -10
00530-61320	81- - 3
	93- - 5
	93- - 5
	292- - 6
	292- - 9
	304- - 6

Printed in Japan

PART NO.	PAGE
	.....304- - 6
00530-61620	..... 80- - 6
	.....291- - 6
	.....292- - 4
00531-01610	..... 78- - 2
	.....289- - 2
00533-62620	.....289- - 1
	.....302- - 4
00540-41010	..... 30- - 2
	.....231- - 2
00540-60710	.....295- -13
00610-30400	..... 79- - 6
	.....290- - 6
00610-84000	..... 67- - 2
00620-81600	..... 84- - 1
	..... 87- - 2
	.....296- - 1
	.....299- - 2
00660-40620	..... 84- - 4
	.....296- - 3
00660-51010	..... 84- - 5
	..... 87- - 5
	.....296- - 4
	.....299- - 4
00721-11300	.....213- - 7
	.....216- - 4
00721-11310	.....217- - 2
00721-11600	.....209- - 3
00721-12200	.....209- - 3
	.....232- - 3
00721-16400	..... 16- - 1
	.....218- - 1
00911-04700	..... 74- - 1
	..... 74- - 2
	.....285- - 2
00911-04710	.....285- - 1
00911-05200	..... 73- - 4
00911-10610	..... 79- - 2
	..... 79- - 3
	.....286- - 1
	.....290- - 3
	.....290- - 3
00911-10810	..... 75- - 2
	..... 79- - 7
	..... 91- - 3
	..... 92- - 2
	.....286- - 1
	.....290- - 7
	.....302- - 7
	.....303- - 2
00911-11410	..... 79- - 5
	..... 79- - 5

Printed in Japan

PART NO.	PAGE	PART NO.	PAGE
	290- - 5		12- - 1
	290- - 6		17- - 3
00911-11510	256- - 4		36- - 1
00911-14010	11- - 4		46- - 2
	64- - 2		62- - 2
	75- - 1		63- - 2
	79- - 1		75- - 5
	79- - 1		79- - 2
	79- - 2		84- - 4
	79- - 3		91- - 2
	79- - 4		202- - 5
	79- - 6		208- - 1
	91- - 4		208- - 2
	275- - 3		214- - 2
	290- - 1		219- - 4
	290- - 1		220- - 2
	290- - 2		220- - 4
	290- - 3		232- - 2
	290- - 4		234- - 1
	290- - 7		236- - 2
	298- - 2		272- - 3
	302- - 8		274- - 4
00911-14400	55- - 2		286- - 5
	254- - 2		290- - 2
00911-14410	2- - 4		296- - 3
	6- - 1		302- - 6

Printed in Japan

PART NO.	PAGE	PART NO.	PAGE
00911-14500	7- - 2		46- - 3
	8- - 2		47- - 2
	11- - 5		51- - 2
	51- - 2		52- - 2
	208- - 2		52- - 2
	210- - 2		58- - 5
	213- - 7		61- - 3
	252- - 2		66- - 2
00911-14510	4- - 3		75- - 3
	5- - 1		76- - 4
	5- - 2		77- - 1
	6- - 2		90- - 3
	6- - 2		97- - 4
	12- - 2		97- - 8
	14- - 2		206- - 2
	18- - 1		206- - 3
	18- - 2		208- - 1
	18- - 3		208- - 2
	18- - 3		209- - 1
	18- - 3		209- - 3
	18- - 4		214- - 2
	44- - 1		221- - 2
	44- - 3		221- - 2
	46- - 1		221- - 3
	46- - 1		221- - 3
	46- - 2		221- - 3

Printed in Japan

PART NO.	PAGE
	.....223- - 1
	.....228- - 2
	.....250- - 2
	.....250- - 3
	.....252- - 3
	.....255- - 2
	.....255- - 2
	.....267- - 7
	.....267- - 7
	.....270- - 1
	.....270- - 2
	.....271- - 4
	.....277- - 2
	.....286- - 3
	.....288- - 1
	.....302- - 3
	.....307- - 5
	.....307-U- 1
00911-14600	..... 9- - 1
00911-14610	..... 15- - 1
	..... 17- - 2
	..... 18- - 2
	..... 60- - 2
	..... 69- - 3
	..... 71- - 3
	..... 75- - 2
	..... 77- - 2
	..... 90- - 2
	.....211- - 3
	.....211- - 3
	.....213- - 7
	.....217- - 1
	.....219- - 3
	.....220- - 3
	.....222- - 3
	.....269- - 2
	.....280- - 3
	.....282- - 4
	.....286- - 2
	.....288- - 2
	.....302- - 2
00911-20810	.....213- - 8
	.....220- - 3
00911-24410	.....203- - 6
	.....229- - 1
00911-24500	..... 3- - 1
	..... 73- - 2
	..... 73- - 2
00911-24510	..... 28- - 3
	..... 55- - 2
	..... 57- - 1
	..... 62- - 3

Printed in Japan

PART NO.	PAGE
	.....226- - 3
	.....228- - 3
	.....229- - 3
	.....254- - 2
	.....265- - 2
	.....266- - 1
	.....272- - 3
00911-24610.....	67- - 2
	..... 67- - 3
	.....204- - 1
	.....229- - 3
	.....278- - 3
	.....278- - 3
	.....284- - 3
00911-24710.....	205- - 5
	.....205- - 6
00911-25210.....	284- - 3
00911-31410.....	60- - 1
	.....269- - 2
00911-31510.....	56- - 3
	..... 96- - 3
	.....260- - 3
	.....309- - 4
00911-34410.....	16- - 1
	..... 66- - 1
	..... 84- - 4

PART NO.	PAGE
	.....218- - 2
	.....277- - 1
	.....296- - 3
00911-34500.....	49- - 2
00911-34510.....	44- - 1
	..... 44- - 2
	..... 46- - 1
	..... 61- - 1
	.....248- - 2
	.....250- - 2
	.....250- - 2
00911-34610.....	28- - 5
	..... 67- - 3
	..... 69- - 3
	..... 71- - 3
	.....228- - 5
	.....278- - 3
	.....280- - 3
	.....282- - 4
00911-34710.....	73- - 2
00911-34810.....	44- - 2
	..... 61- - 1
	.....250- - 2
	.....271- - 2
00911-34910.....	74- - 3
	.....285- - 2

Printed in Japan

PART NO.	PAGE
00911-63000	9- - 1
	211- - 2
00911-84600	58- - 1
	267- - 1
00911-84710	67- - 1
	278- - 1
00911-84810	67- - 2
	278- - 2
00911-94510	46- - 2
00912-34510	18- - 4
	18- - 4
	20- - 1
	223- - 1
00912-34610	67- - 3
	69- - 2
	71- - 2
	280- - 2
	282- - 3
00912-34710	21- - 2
	71- - 3
	224- - 2
	282- - 4
00912-44510	21- - 1
	21- - 2
	23- - 5
	67- - 1
	67- - 4
	70- - 2
	224- - 1
	224- - 2
	228- - 3
	228- - 5
	278- - 1
	278- - 2
	278- - 4
	281- - 2
00912-44610	67- - 2
	278- - 2
00912-44700	69- - 1
	280- - 1
00912-44710	71- - 2
	282- - 3
00912-44910	71- - 2
	282- - 3
00912-54600	261- - 3
00912-64700	73- - 3
	74- - 3
	285- - 2
00912-64710	284- - 3
00912-64800	74- - 3
00913-14010	66- - 3
	277- - 4

Printed in Japan

PART NO.	PAGE
00915-44410	34- - 1
	34- - 2
	79- - 2
	79- - 3
	234- - 1
	290- - 2
	290- - 3
00914-52010	90- - 1
	302- - 2
00915-10610	72- - 3
	79- - 2
	79- - 3
	97- - 4
	283- - 1
	283- - 3
	286- - 1
	290- - 3
	290- - 3
	307- - 5
00915-10810	16- - 2
	16- - 2
	75- - 2
	79- - 7
	91- - 3
	92- - 2
	218- - 2
	218- - 2
	286- - 1
	290- - 7
	302- - 7
	303- - 2
00915-11000	91- - 2
	302- - 6
00915-11010	11- - 4
	11- - 5
	17- - 1
	17- - 2
	17- - 2
	29- - 2
	30- - 2
	30- - 2
	31- - 1
	36- - 2
	37- - 2
	38- - 3
	64- - 2
	66- - 3
	75- - 1
	79- - 1
	79- - 1
	79- - 2
	79- - 3

Printed in Japan

PART NO.	PAGE	PART NO.	PAGE
	79- - 4		240- - 2
	84- - 4		275- - 3
	86- - 2		277- - 4
	86- - 3		290- - 1
	87- - 5		290- - 1
	89- - 1		290- - 2
	89- - 2		290- - 3
	91- - 1		290- - 4
	91- - 4		296- - 4
	97- - 4		298- - 1
	213- - 8		298- - 2
	216- - 4		299- - 4
	219- - 1		301- - 1
	219- - 3		301- - 2
	219- - 3		302- - 5
	220- - 1		302- - 8
	220- - 2		307- - 4
	220- - 3	00915-11310	229- - 1
	220- - 4	00915-11400	2- - 4
	230- - 2		2- - 4
	231- - 2		5- - 2
	231- - 2		6- - 1
	231- - 3		7- - 1
	232- - 1		7- - 1
	236- - 2		7- - 2
	239- - 3		8- - 1

Printed in Japan

PART NO.	PAGE	PART NO.	PAGE
	8- - 1		63- - 2
	55- - 2		64- - 1
	56- - 2		75- - 1
	202- - 5		75- - 5
	205- - 1		76- - 1
	206- - 3		76- - 2
	208- - 1		76- - 3
	210- - 1		77- - 1
	210- - 1		77- - 2
	211- - 2		79- - 2
	254- - 2		79- - 2
	256- - 4		79- - 3
	260- - 2		79- - 3
00915-11410	12- - 1		79- - 5
	18- - 2		79- - 5
	18- - 5		79- - 5
	28- - 1		85- - 4
	28- - 3		86- - 3
	28- - 4		89- - 3
	34- - 1		91- - 1
	34- - 2		91- - 2
	36- - 1		92- - 2
	46- - 2		93- - 2
	59- - 2		93- - 3
	60- - 1		96- - 2
	62- - 2		96- - 3

Printed in Japan

PART NO.	PAGE
	.....202- - 5
	.....203- - 4
	.....203- - 6
	.....208- - 2
	.....214- - 2
	.....220- - 2
	.....228- - 1
	.....228- - 4
	.....228- - 4
	.....229- - 1
	.....229- - 3
	.....232- - 2
	.....232- - 3
	.....234- - 1
	.....236- - 2
	.....268- - 1
	.....269- - 1
	.....270- - 1
	.....270- - 3
	.....272- - 3
	.....274- - 4
	.....275- - 1
	.....286- - 1
	.....286- - 5
	.....287- - 1
	.....287- - 2
	.....287- - 3
	.....288- - 1
	.....288- - 2
	.....290- - 2
	.....290- - 2
	.....290- - 3
	.....290- - 4
	.....290- - 5
	.....290- - 6
	.....290- - 6
	.....297- - 3
	.....298- - 3
	.....300- - 6
	.....301- - 3
	.....302- - 4
	.....302- - 5
	.....303- - 2
	.....304- - 2
	.....304- - 4
	.....309- - 3
	.....309- - 4
00915-11500	..... 2- - 5
	..... 11- - 5
	..... 19- - 2
	..... 56- - 2
	..... 73- - 1

Printed in Japan

PART NO.	PAGE	PART NO.	PAGE
	73- - 2		28- - 3
	73- - 3		28- - 3
	202- - 4		28- - 3
	202- - 5		28- - 4
	208- - 2		31- - 2
	209- - 2		46- - 1
	211- - 2		46- - 2
	213- - 6		46- - 3
	222- - 3		47- - 2
	256- - 1		51- - 2
	260- - 2		51- - 2
	284- - 1		52- - 2
	284- - 3		55- - 2
00915-11510	12- - 2		58- - 5
	14- - 2		62- - 3
	16- - 3		64- - 2
	18- - 1		69- - 2
	18- - 2		69- - 3
	18- - 2		75- - 3
	18- - 2		76- - 2
	18- - 3		76- - 2
	18- - 3		76- - 2
	18- - 3		76- - 4
	18- - 4		77- - 1
	18- - 4		84- - 1
	21- - 2		87- - 2

Printed in Japan

PART NO.	PAGE	PART NO.	PAGE
	90- - 1		228- - 3
	90- - 2		228- - 3
	91- - 2		228- - 3
	92- - 2		228- - 5
	92- - 3		229- - 3
	94- - 1		231- - 5
	96- - 3		252- - 2
	97- - 4		252- - 3
	97- - 7		254- - 2
	97- - 8		255- - 2
	209- - 3		256- - 2
	214- - 2		256- - 2
	215- - 1		256- - 3
	216- - 4		256- - 4
	218- - 3		267- - 7
	221- - 1		267- - 7
	221- - 1		272- - 4
	221- - 2		275- - 2
	221- - 3		280- - 2
	221- - 3		280- - 3
	221- - 3		286- - 3
	221- - 3		287- - 2
	223- - 1		287- - 2
	226- - 3		287- - 2
	228- - 2		288- - 1
	228- - 3		296- - 2

Printed in Japan

PART NO.	PAGE
	.....299- - 3
	.....302- - 2
	.....302- - 3
	.....302- - 6
	.....303- - 2
	.....303- - 3
	.....305- - 1
	.....307- - 5
	.....307-U- 1
	.....307-U- 1
	.....309- - 4
00915-11600	..... 4- - 1
	..... 9- - 1
	.....202- - 4
	.....205- - 2
00915-11610	..... 15- - 1
	..... 17- - 2
	..... 18- - 2
	..... 28- - 5
	..... 75- - 2
	..... 90- - 2
	.....211- - 3
	.....211- - 3
	.....213- - 7
	.....217- - 1
	.....219- - 3

PART NO.	PAGE
	.....220- - 3
	.....222- - 3
	.....228- - 5
	.....229- - 3
	.....248- - 1
	.....279- - 2
	.....286- - 2
	.....302- - 3
00915-11810	..... 75- - 2
	..... 90- - 1
	.....286- - 3
	.....302- - 2
00915-21400	..... 5- - 2
	..... 19- - 2
	.....206- - 3
	.....222- - 3
00915-21410	..... 65- - 2
	.....276- - 2
00915-21500	..... 3- - 2
	..... 7- - 2
	..... 8- - 2
	..... 49- - 3
	..... 52- - 2
	.....202- - 4
	.....204- - 3
	.....210- - 2

Printed in Japan

PART NO.	PAGE
	.....247- - 2
	.....255- - 2
00915-21510.....	44- - 3
	..... 51- - 2
	..... 57- - 1
	..... 61- - 3
	..... 66- - 2
	.....248- - 2
	.....250- - 3
	.....252- - 2
	.....265- - 2
	.....266- - 1
	.....270- - 2
	.....271- - 4
	.....277- - 2
00915-21610.....	21- - 1
	..... 21- - 1
	..... 28- - 4
	..... 51- - 1
	..... 67- - 3
	.....224- - 2
	.....228- - 4
	.....229- - 3
	.....249- - 1
	.....252- - 1
	.....256- - 4

PART NO.	PAGE
	.....278- - 3
00915-21800.....	2- - 1
	.....202- - 1
	.....203- - 1
00915-40610.....	79- - 2
	..... 79- - 3
	.....286- - 2
	.....290- - 3
	.....290- - 3
00915-40810.....	17- - 3
	..... 75- - 2
	..... 79- - 7
	..... 91- - 3
	..... 92- - 2
	.....219- - 4
	.....232- - 2
	.....286- - 1
	.....290- - 7
	.....302- - 6
	.....303- - 2
00915-41010.....	11- - 4
	..... 31- - 1
	..... 43- - 1
	..... 79- - 1
	..... 79- - 1
	..... 79- - 4

Printed in Japan

PART NO.	PAGE
	79- - 6
	86- - 2
	86- - 3
	89- - 1
	89- - 2
	91- - 1
	91- - 4
	96- - 2
	216- - 4
	231- - 4
	246- - 1
	246- - 1
	290- - 1
	290- - 1
	290- - 4
	290- - 7
	298- - 1
	298- - 2
	301- - 1
	301- - 2
	302- - 5
	302- - 8
	309- - 4
00915-41410	12- - 1
	17- - 1
	17- - 3

PART NO.	PAGE
	28- - 1
	28- - 3
	36- - 1
	39- - 2
	40- - 1
	75- - 1
	76- - 1
	76- - 3
	76- - 4
	77- - 1
	77- - 3
	79- - 2
	79- - 3
	79- - 3
	79- - 5
	79- - 5
	79- - 5
	84- - 4
	91- - 1
	91- - 2
	92- - 2
	93- - 2
	93- - 3
	96- - 2
	214- - 2
	219- - 2

Printed in Japan

PART NO.	PAGE	PART NO.	PAGE
	.....219- - 4		.....304- - 2
	.....220- - 4		.....304- - 4
	.....228- - 1		.....309- - 3
	.....228- - 4	00915-41500.....	4- - 3
	.....229- - 1	.....	6- - 2
	.....232- - 2	.....	6- - 2
	.....236- - 2		.....208- - 2
	.....241- - 3		.....209- - 2
	.....242- - 2	00915-41510.....	5- - 1
	.....242- - 3	.....	5- - 2
	.....286- - 1	.....	12- - 2
	.....287- - 1	.....	18- - 1
	.....287- - 3	.....	18- - 2
	.....287- - 4	.....	18- - 3
	.....288- - 1	.....	18- - 3
	.....288- - 2	.....	18- - 4
	.....290- - 2	.....	46- - 1
	.....290- - 3	.....	46- - 2
	.....290- - 4	.....	46- - 3
	.....290- - 5	.....	55- - 2
	.....290- - 6	.....	66- - 1
	.....290- - 6	.....	69- - 3
	.....296- - 3	.....	75- - 3
	.....302- - 4	.....	76- - 2
	.....302- - 5	.....	76- - 2
	.....303- - 2	.....	76- - 2

Printed in Japan

PART NO.	PAGE
	90- - 1
	90- - 2
	91- - 2
	91- - 2
	92- - 1
	94- - 1
	96- - 3
	97- - 7
	206- - 2
	206- - 3
	208- - 1
	209- - 1
	209- - 2
	209- - 3
	214- - 2
	221- - 2
	221- - 2
	221- - 2
	221- - 3
	221- - 3
	254- - 2
	280- - 3
	286- - 3
	287- - 2
	287- - 2
	287- - 2
	302- - 2
	302- - 3
	302- - 5
	302- - 6
	303- - 2
	305- - 1
	307-U- 1
	309- - 4
00915-41600	209- - 2
00915-41610	28- - 4
	58- - 1
	222- - 3
	228- - 5
	267- - 1
00915-42200	73- - 4
	284- - 3
00915-51410	34- - 1
	34- - 2
	35- - 2
	79- - 5
	79- - 5
	86- - 2
	97- - 6
	229- - 2
	229- - 2
	254- - 1

Printed in Japan

PART NO.	PAGE
	.....235- - 3
	.....290- - 5
	.....290- - 6
	.....296- - 2
	.....308- - 5
00915-51500	..... 84- - 1
	..... 87- - 2
	.....296- - 1
	.....299- - 3
00915-51510	..... 28- - 3
	..... 28- - 4
	..... 46- - 2
	.....228- - 3
	.....228- - 5
00915-51520	..... 93- - 6
	.....304- - 6
00915-51610	..... 21- - 1
	..... 75- - 2
	..... 90- - 2
	.....224- - 1
	.....286- - 2
	.....302- - 3
00915-51810	..... 75- - 2
	..... 90- - 2
	.....302- - 2
00915-51910	.....286- - 3
00915-60620	..... 80- - 6
	.....291- - 6
	.....292- - 9
00915-61000	..... 91- - 4
	.....302- - 8
00916-11400	..... 4- - 1
	..... 4- - 1
	.....205- - 1
	.....205- - 3
	.....211- - 1
00916-11410	..... 93- - 3
	.....304- - 4
00916-11800	..... 44- - 2
	..... 61- - 1
	.....250- - 2
	.....271- - 2
00916-12000	..... 73- - 4
	.....284- - 3
00916-21510	..... 13- - 1
	..... 46- - 1
	.....215- - 1
00916-21710	..... 67- - 4
	.....278- - 4
00916-21800	.....213- - 6
00916-31410	..... 17- - 3
	..... 77- - 1

Printed in Japan

PART NO.	PAGE
	64- - 2
	87- - 4
	219- - 3
	220- - 4
	285- - 1
	296- - 2
	299- - 4
00916-41000	213- - 7
00916-41010	86- - 2
	89- - 1
	89- - 1
	93- - 3
	298- - 1
	301- - 1
	301- - 2
	304- - 3
00916-41410	86- - 2
	89- - 2
	93- - 3
	94- - 1
	298- - 2
	301- - 2
	304- - 4
	305- - 1
00916-41510	92- - 2
	92- - 3
	303- - 2
	303- - 3
00918-10500	91- - 3
	91- - 3
	286- - 1
	286- - 4
	290- - 4
	302- - 7
00918-11000	75- - 4
	79- - 4
	92- - 2
	245- - 1
	303- - 3
00918-21500	2- - 4
00921-01010	17- - 3
	219- - 4
	304- - 3
00921-01210	16- - 1
	218- - 1
00921-01510	76- - 3
	287- - 3
00921-01810	66- - 2
	277- - 4
	277- - 4
00921-11210	77- - 2
	77- - 2

Printed in Japan

PART NO.	PAGE
	288- - 2
	288- - 2
00921-11510	17- - 1
	17- - 3
	17- - 3
	219- - 2
	219- - 3
	219- - 4
00921-11800	56- - 1
	66- - 2
	260- - 1
	277- - 3
00921-11810	46- - 2
	66- - 1
	270- - 1
	270- - 2
	277- - 2
00921-21810	17- - 2
	58- - 1
	60- - 2
	219- - 2
	220- - 2
	267- - 1
	269- - 3
00921-22000	4- - 3
00921-22010	17- - 3
	44- - 1
	219- - 4
	250- - 2
00921-32010	277- - 4
00921-32210	74- - 1
	74- - 2
	285- - 1
	285- - 2
00921-32500	67- - 1
	67- - 2
	211- - 1
	278- - 1
	278- - 2
00921-43000	58- - 4
	267- - 5
00921-43010	279- - 2
00921-43510	77- - 1
	267- - 5
	288- - 1
00921-44000	68- - 1
	73- - 4
	279- - 1
00922-22200	204- - 6
00924-61610	205- - 2
00926-51600	204- - 3
00927-21300	53- - 5

Printed in Japan

PART NO.	PAGE
	54- - 4
	253- - 4
	257- - 4
00931-11200	51- - 2
	70- - 2
	252- - 2
	256- - 1
	281- - 2
00931-20800	207- - 1
	209- - 1
00931-30200	6- - 1
	9- - 1
	208- - 1
	209- - 1
00931-30210	203- - 2
00931-30610	19- - 2
	222- - 2
00931-42610	16- - 1
	218- - 1
00931-43000	56- - 2
	260- - 2
00932-10200	74- - 1
	74- - 2
	285- - 1
	285- - 1
00932-20200	67- - 2
	67- - 3
	67- - 4
	74- - 1
	278- - 3
	278- - 3
	285- - 1
00932-30200	66- - 2
	67- - 1
	277- - 2
00933-13000	203- - 4
00933-13500	2- - 1
	202- - 1
	203- - 1
00933-33000	284- - 1
00951-10800	64- - 1
	275- - 1
00951-21000	16- - 2
	218- - 2
00991-51151	224- - 2
00998-11110	38- - 2
	240- - 2
00998-13910	39- - 1
	241- - 2
00998-51010	43- - 1
	246- - 1
00998-51410	246- - 2

Printed in Japan

PART NO.	PAGE
00998-52420	41- - 1
	244- - 2
00998-52810	244- - 1
00998-81120	41- - 1
	43- - 1
	244- - 1
	246- - 1
00998-81210	39- - 2
	241- - 3
00998-81420	246- - 2
00999-20200	41- - 1
	244- - 2
00999-20210	43- - 1
	246- - 1
	246- - 1
00999-20300	39- - 2
	241- - 3
00999-20310	40- - 1
	242- - 2
	242- - 3
00999-20410	71- - 1
	282- - 3
00999-90110	38- - 2
	43- - 1
	240- - 2
	246- - 1
00999-90210	41- - 1
	43- - 1
	244- - 2
	246- - 1
	246- - 1
00999-90310	39- - 2
	40- - 1
	241- - 3
	242- - 2
	242- - 3
00999-90610	244- - 1
08110-81610	209- - 2
08111-02210	224- - 1
08120-61400	211- - 1
08120-61810	205- - 1
08120-63810	205- - 2
08120-82010	248- - 2
08120-82200	211- - 2
08120-84500	203- - 3
08121-84010	203- - 3
08130-61610	222- - 4
08130-61810	203- - 6
08130-62210	203- - 6
08131-36010	256- - 4
08223-82010	209- - 1
08223-82510	203- - 2

Printed in Japan

PART NO.	PAGE
08223-82810	207- - 2
08223-83210	207- - 2
08223-84510	209- - 1
08226-61610	203- - 6
08227-02210	203- - 2
08227-04510	203- - 2
08360-52010	231- - 4
08721-16700	218- - 1
08911-10510	231- - 4
08911-10610	203- - 6
08911-10810	209- - 3
08911-20810	209- - 1
	226- - 3
08911-24010	205- - 5
	205- - 6
	229- - 3
08915-13600	211- - 2
08915-13610	203- - 6
	205- - 1
	222- - 4
08915-13800	203- - 4
	211- - 2
08915-13810	209- - 2
	209- - 3
	221- - 2
	226- - 3
08915-14010	205- - 2
	224- - 1
	229- - 3
08915-23810	248- - 2
08915-24010	229- - 3
	256- - 4
08915-43510	231- - 4
08915-43610	209- - 2
	209- - 3
08915-43810	209- - 1
	221- - 2
	226- - 3
08931-02510	229- - 3
08931-30210	203- - 2
	209- - 1

Printed in Japan

PART NO.	PAGE
10000	
10000-10850.....	1- - 1
10000-10851.....	1- - 1
10000-10852.....	1- - 1
.....	1- - 1
10000-10853.....	1- - 1
10000-10854.....	1- - 2
10000-10855.....	1- - 2
10000-10856.....	1- - 2
10000-11452.....	1- - 1
10000-11651.....	1- - 1
10000-11652.....	1- - 2
10000-11751.....	1- - 1
10000-11752.....	1- - 2
10000-12151.....	1- - 1
10000-12152.....	1- - 2
10000-12153.....	1- - 2
10000-12154.....	1- - 2
10000-12451.....	1- - 1
10000-12452.....	1- - 2
10000-12453.....	1- - 2
10000-13850.....	1- - 1
10000-13950.....	1- - 1
10000-13951.....	1- - 2
10000-14350.....	1- - 1
10000-14450.....	1- - 2
10000-24550.....	201- - 2
10001-10658.....	1- - 3
10001-10830.....	1- - 3
10001-10838.....	1- - 3
10001-10839.....	1- - 3
10001-10851.....	1- - 3
10001-10852.....	1- - 3
10001-10856.....	1- - 3
10001-10858.....	1- - 3
10001-11430.....	1- - 3
10001-11439.....	1- - 3
10001-11452.....	1- - 2
10001-13830.....	1- - 3
10001-13831.....	1- - 3
10001-16751.....	201- - 2
10001-16752.....	201- - 2
10001-16937.....	201- - 2
10001-16940.....	201- - 1
10001-16941.....	201- - 1
10001-16943.....	201- - 1
10001-16944.....	201- - 1
10001-16945.....	201- - 2
10001-16953.....	201- - 1
.....	201- - 1
10001-16954.....	201- - 1

Printed in Japan

PART NO.	PAGE
	201- - 1
10001-16956	201- - 1
10001-16957	201- - 1
10001-17052	201- - 2
10001-17054	201- - 2
10001-18830	201- - 2
10001-18831	201- - 2
10001-18850	201- - 2
10001-18851	201- - 3
10001-18950	201- - 2
10001-21501	1- - 1
10005-10600	5- - 2
	206- - 3
10005-15800	207- - 2
10005-15801	207- - 2
10006-15800	207- - 2
10006-32200	5- - 2
	206- - 3
10101-10625	1- - 3
10101-14625	201- - 3
10101-16525	201- - 3
10102-13200	201- - 3
10102-15800	201- - 3
10102-18810	201- - 3
10103-13200	201- - 3
10103-15900	201- - 3
10103-18815	201- - 3
10125-62200	312- - 1
11010-09551	2- - 1
11010-10630	2- - 1
11010-11450	2- - 1
11010-11451	2- - 1
11010-13200	202- - 1
11010-15801	203- - 1
11010-74700	203- - 1
11012-08100	2- - 6
11012-13200	202- - 6
11012-14600	203- - 4
11013-08100	2- - 6
11013-13200	202- - 6
11013-14600	203- - 4
11014-08100	2- - 6
11014-13200	202- - 6
11014-14600	203- - 4
11019-32200	2- - 1
	202- - 1
	203- - 1
11021-13200	202- - 1
11021-30000	2- - 2
	202- - 1
	203- - 1
11022-30000	2- - 2

Printed in Japan

PART NO.	PAGE
	202- - 1
11023-30000	2- - 2
11023-32200	203- - 2
11024-03200	203- - 2
11024-30000	2- - 1
	202- - 1
11026-61000	2- - 2
	2- - 6
	202- - 2
	202- - 7
	203- - 5
11027-09401	2- - 5
	202- - 5
11029-09400	2- - 5
	202- - 5
	202- - 5
	202- - 6
11033-09400	2- - 5
	202- - 6
11035-30000	2- - 5
	202- - 6
11041-10601	5- - 1
11041-10701	5- - 1
11041-13200	206- - 1
11041-15801	207- - 1
11041-16700	206- - 1
11041-18811	207- - 1
11044-04000	5- - 1
11044-07200	5- - 1
11044-13201	206- - 1
11044-14600	207- - 2
11044-14601	207- - 2
11044-30004	206- - 1
11049-14600	207- - 1
11051-14600	207- - 1
11052-14600	207- - 1
11055-10600	2- - 2
	202- - 2
11056-30000	2- - 2
	202- - 2
	207- - 1
11056-32200	207- - 2
	207- - 2
11057-30000	2- - 2
	202- - 2
11057-32200	207- - 2
11057-78200	207- - 2
11058-10600	5- - 1
	206- - 1
11058-14600	207- - 2
11058-18810	207- - 2
11059-30000	5- - 1

Printed in Japan

PART NO.	PAGE
.....	206- - 1
11060-10600.....	5- - 1
.....	206- - 1
11060-15801.....	207- - 3
11062-30000.....	5- - 1
.....	206- - 1
.....	207- - 3
11063-32200.....	207- - 1
11063-78200.....	207- - 1
11065-30000.....	5- - 1
.....	206- - 1
11066-30000.....	5- - 2
.....	206- - 3
11098-14600.....	207- - 1
11099-14600.....	207- - 1
11110-10600.....	2- - 6
.....	202- - 6
11110-15800.....	203- - 5
11110-16700.....	202- - 6
11115-24500.....	203- - 5
11116-24500.....	203- - 5
11117-24500.....	203- - 5
11120-10460.....	73- - 1
11120-10490.....	73- - 1
11120-30000.....	16- - 2
11120-61000.....	2- - 6
11121-09400.....	2- - 6
11121-10600.....	202- - 6
11121-12210.....	203- - 5
11122-01300.....	2- - 5
.....	202- - 5
11125-30000.....	2- - 6
.....	202- - 6
11128-61001.....	2- - 6
.....	202- - 6
.....	203- - 5
11222-10600.....	21- - 1
.....	224- - 1
11222-15800.....	224- - 1
11222-15801.....	224- - 1
11223-10600.....	21- - 1
.....	224- - 1
11223-15800.....	224- - 1
11223-15801.....	224- - 1
11322-10601.....	21- - 1
11322-13201.....	21- - 1
.....	224- - 2
11322-15801.....	224- - 2
11322-15802.....	224- - 2
11322-16701.....	224- - 2
11322-20200.....	224- - 2
11340-10602.....	21- - 1

Printed in Japan

PART NO.	PAGE
11340-13251	21- - 1
	224- - 2
11340-24550	224- - 2
11357-36702	21- - 1
	224- - 2
11372-10602	21- - 1
	224- - 2
11710-13201	228- - 2
11711-13201	228- - 2
11712-13200	228- - 2
12010-09400	3- - 3
12010-09401	3- - 3
12010-09402	3- - 3
12010-09403	3- - 3
12010-09404	3- - 3
12010-09405	3- - 3
12010-09406	3- - 3
12010-13201	204- - 5
12010-13202	204- - 5
12010-13203	204- - 5
12010-13204	204- - 5
12010-13205	204- - 5
12010-13206	204- - 5
12010-13207	204- - 5
12010-14611	204- - 5
12010-14613	204- - 5
12010-14614	204- - 5
12010-14615	204- - 5
12010-14616	204- - 5
12010-14618	204- - 5
12024-30000	3- - 3
12030-32200	204- - 1
12033-01302	3- - 3
12033-10601	3- - 3
12033-10800	3- - 3
12033-13900	204- - 6
12033-13901	204- - 6
12033-14600	204- - 6
12033-14601	204- - 6
12033-19100	204- - 6
12034-13900	204- - 6
12034-13901	204- - 6
12034-19100	204- - 6
12035-01301	3- - 4
12035-01302	3- - 4
12035-13900	204- - 6
12035-13901	204- - 6
12035-14600	204- - 6
12035-14601	204- - 6
12035-19100	204- - 6
12036-01301	3- - 4
12036-01302	3- - 4

Printed in Japan

PART NO.	PAGE
12036-13900	204- - 7
12036-13901	204- - 7
12036-14600	204- - 6
12036-14601	204- - 7
12036-19100	204- - 7
12037-01301	3- - 4
12037-01302	3- - 4
12037-13900	204- - 7
12037-13901	204- - 7
12037-14600	204- - 7
12037-14601	204- - 7
12037-19100	204- - 7
12038-01301	3- - 4
12038-01302	3- - 4
12038-13900	204- - 7
12038-13901	204- - 7
12038-14600	204- - 7
12038-14601	204- - 7
12038-19100	204- - 7
12039-01301	3- - 4
12039-01302	3- - 4
12039-13900	204- - 7
12039-13901	204- - 8
12039-19100	204- - 8
12040-01301	3- - 4
12040-01302	3- - 4
12040-14600	204- - 8
12040-14601	204- - 8
12100-09400	204- - 1
12100-09500	3- - 1
12100-14650	204- - 1
12109-04400	3- - 1
	204- - 1
12109-14600	204- - 1
12111-09405	3- - 1
	204- - 1
12111-12210	204- - 1
12111-16700	204- - 1
12112-02700	3- - 1
	204- - 1
	248- - 2
12112-13200	204- - 1
12112-58000	204- - 1
12117-09402	3- - 1
	204- - 2
12117-09405	3- - 1
	204- - 2
12117-12210	204- - 2
12117-16700	204- - 2
12118-09402	3- - 1
	204- - 2
12118-09405	3- - 1

Printed in Japan

PART NO.	PAGE
	204- - 2
12118-12210	204- - 2
12118-16700	204- - 2
12119-09402	3- - 2
	204- - 2
12119-09405	3- - 2
	204- - 2
12119-12210	204- - 3
12119-16700	204- - 3
12120-09402	3- - 2
	204- - 3
12120-09405	3- - 2
	204- - 3
12120-12210	204- - 3
12120-16700	204- - 3
12121-09402	3- - 1
	204- - 1
12121-09405	3- - 1
	204- - 1
12121-12210	204- - 1
12121-16700	204- - 1
12122-09402	3- - 1
	204- - 2
12122-09405	3- - 1
	204- - 2
12122-12210	204- - 2
12122-16700	204- - 2
12200-09500	3- - 2
12200-09522	3- - 2
12200-13200	204- - 3
12200-14600	204- - 3
12200-74710	204- - 3
12207-73600	203- - 4
12207-78400	203- - 4
12208-73600	203- - 4
12209-73600	203- - 4
12210-73600	203- - 5
12211-73600	203- - 5
12212-73600	203- - 5
12231-09600	2- - 2
12231-13200	202- - 2
12231-16700	202- - 2
12233-09600	2- - 2
12233-13200	202- - 2
12234-09600	2- - 2
12234-13200	202- - 2
12235-09600	2- - 2
12235-13200	202- - 2
12236-09600	2- - 2
12236-13200	202- - 2
12279-09400	2- - 3
	202- - 3

Printed in Japan

PART NO.	PAGE
12279-32200	203- - 2
12279-61000	203- - 3
12280-13200	202- - 2
12280-30800	2- - 2
	202- - 2
12281-13200	202- - 3
12281-30800	2- - 3
	202- - 3
12282-09400	2- - 1
12283-09400	2- - 1
12286-09400	2- - 1
12287-09400	2- - 3
	202- - 3
12289-09400	2- - 3
	202- - 3
12290-11600	203- - 2
12294-32201	203- - 2
12294-78200	203- - 1
12295-78200	203- - 1
12297-32200	204- - 4
12301-30000	3- - 2
	204- - 3
12302-30000	3- - 2
	204- - 4
12304-32200	204- - 4
12303-10600	3- - 2
	204- - 4
12303-15800	204- - 4
12303-16700	204- - 4
12308-10600	3- - 2
	204- - 4
12308-65000	204- - 4
12309-16500	204- - 4
12309-30800	3- - 3
	204- - 4
12309-71200	204- - 4
12309-78200	204- - 4
12310-09521	45- - 1
12310-10600	3- - 3
12310-10601	3- - 3
	204- - 4
12310-14600	204- - 4
12310-16700	204- - 4
12310-18810	204- - 4
12312-09600	3- - 3
	45- - 1
	204- - 4
12312-61000	204- - 4
12312-62800	204- - 4
12313-10600	204- - 5
12313-30000	3- - 3
	204- - 4

Printed in Japan

PART NO.	PAGE
12314-30000	3- - 3
	203- - 5
	204- - 5
12315-09521	45- - 4
12316-30000	3- - 2
	204- - 3
12318-13200	202- - 2
12318-30800	2- - 2
	202- - 2
12319-13200	202- - 3
12319-30800	2- - 3
	202- - 3
12320-13200	202- - 3
12320-30800	2- - 3
	202- - 3
12321-13200	202- - 3
12321-30800	2- - 3
	202- - 3
12322-13200	202- - 3
12323-13200	202- - 2
12330-62800	203- - 5
12330-78200	203- - 5
12331-62800	203- - 5
12331-78200	203- - 5
12333-62800	203- - 5
12333-78200	203- - 5
13001-09500	4- - 1
	205- - 1
13001-10600	4- - 1
13001-12900	205- - 1
13001-16700	205- - 1
13001-16701	205- - 1
13001-18810	205- - 1
13002-08000	2- - 1
	202- - 1
13002-13200	202- - 1
13002-71204	203- - 1
13002-71205	203- - 1
13002-71206	203- - 1
13002-71207	203- - 1
13003-08000	2- - 1
	202- - 1
13003-13200	202- - 1
13004-08000	2- - 1
	202- - 1
13004-08001	2- - 1
	202- - 1
13004-13200	202- - 1
13004-13201	202- - 1
13010-02701	4- - 1
	205- - 1
13010-32200	205- - 1

Printed in Japan

PART NO.	PAGE
13010-78200	205- - 1
13012-78200	205- - 2
13013-78200	205- - 2
13021-30000	3- - 2
	204- - 3
13021-32200	204- - 3
13024-30800	4- - 1
	205- - 2
13024-32200	205- - 2
13024-78200	205- - 2
13028-10600	4- - 1
	205- - 2
13028-31700	4- - 1
13028-32200	205- - 2
13030-08000	4- - 1
	205- - 2
13032-30000	4- - 1
	205- - 1
13034-01300	4- - 1
13034-08700	202- - 1
13037-10600	2- - 4
	202- - 1
13037-61070	203- - 3
13037-01300	4- - 4
	202- - 1
13042-30000	4- - 4
	202- - 4
13042-32200	203- - 3
13044-08000	2- - 4
	202- - 4
13044-32200	203- - 3
13047-30000	2- - 4
	2- - 4
	202- - 5
	202- - 5
13048-30000	2- - 5
	202- - 5
13070-09400	4- - 1
13070-10600	4- - 1
	205- - 2
13070-32200	205- - 2
13072-09400	4- - 1
	205- - 2
13072-10600	4- - 1
	205- - 2
13078-32200	205- - 3
13081-32201	203- - 2
13081-78200	203- - 2
13082-06000	4- - 1
	205- - 2
13201-10600	4- - 2
	205- - 2

Printed in Japan

PART NO.	PAGE
13201-12201	205- - 3
13201-12202	205- - 3
13201-12900	205- - 3
13201-16700	205- - 3
13201-30800	4- - 2
13202-09600	4- - 2
	205- - 3
13202-12200	205- - 3
13202-12201	205- - 3
13202-12202	205- - 3
13202-16700	205- - 3
13203-08100	4- - 2
	205- - 3
13203-32200	4- - 2
	205- - 3
13204-08100	4- - 2
	205- - 3
13205-10600	4- - 2
	205- - 3
13205-14600	205- - 3
13206-14600	205- - 3
13207-08000	4- - 2
	205- - 3
13207-12200	205- - 3
13207-12910	205- - 4
13207-66700	205- - 4
13209-04100	4- - 2
	205- - 4
13209-08000	4- - 2
	205- - 4
13209-12900	205- - 4
13210-12200	205- - 4
13211-30001	5- - 1
	206- - 1
13212-14601	207- - 1
13212-18810	207- - 1
13213-14601	207- - 1
13213-18810	207- - 1
13213-30001	5- - 1
	206- - 1
13214-14600	207- - 1
13222-12200	205- - 4
13222-18810	205- - 4
13223-12200	205- - 4
13223-18810	205- - 4
13224-78200	207- - 1
13226-58000	205- - 5
	205- - 6
13226-78200	205- - 5
	205- - 7
13228-10400	207- - 3
13231-08001	4- - 3

Printed in Japan

PART NO.	PAGE
13231-08002	4- - 3
13234-78200	205- - 5
	205- - 6
13235-78200	205- - 5
	205- - 6
13238-04102	4- - 3
13239-10400	207- - 3
13240-30000	4- - 2
	205- - 5
	205- - 6
13247-30000	4- - 2
	205- - 5
	205- - 6
13248-30001	4- - 2
	205- - 4
13249-30001	4- - 2
	205- - 4
13252-12200	205- - 4
13252-30001	4- - 2
	205- - 4
13254-30001	4- - 2
	205- - 4
13254-58000	205- - 4
13255-10600	5- - 2
13255-58000	205- - 6
	205- - 7
13256-30000	4- - 2
	205- - 4
13256-58000	205- - 4
13257-09400	4- - 2
	205- - 5
	205- - 6
13258-12200	205- - 5
	205- - 6
13258-78200	205- - 5
	205- - 6
13259-12200	205- - 5
	205- - 6
13259-78200	205- - 5
	205- - 6
13260-30000	4- - 2
	205- - 5
	205- - 6
13261-30000	4- - 2
	205- - 6
	205- - 7
13262-30000	4- - 2
	205- - 5
	205- - 6
13264-10600	5- - 2
13264-10801	5- - 2
13264-13200	206- - 2

Printed in Japan

PART NO.	PAGE	PART NO.	PAGE
13264-13900	206- - 2	14004-10601	6- - 1
13264-16000	207- - 2	14004-10700	6- - 1
13265-13200	206- - 2	14004-14801	208- - 1
13265-13201	206- - 2	14005-10600	6- - 1
13265-13900	206- - 2	14012-10400	213- - 5
13270-32200	207- - 3	14012-10601	213- - 5
13273-10600	5- - 2	14014-10600	5- - 1
13273-10601	206- - 2	14014-13200	206- - 1
13274-18810	207- - 3	14014-20200	206- - 1
13279-10600	4- - 3	14016-10600	11- - 5
13287-58000	205- - 5	14033-30000	6- - 1
	205- - 6		208- - 1
13288-58000	205- - 5	14034-08000	6- - 1
	205- - 6	14034-13200	208- - 1
13291-04100	4- - 3	14034-14600	209- - 2
	205- - 6	14035-08000	6- - 1
	205- - 7	14035-13200	6- - 1
13500-66600	203- - 3		208- - 1
13541-66600	203- - 3	14035-14600	209- - 1
14001-10601	6- - 1	14037-08000	6- - 2
14002-18825	209- - 1	14037-30800	6- - 2
14002-18826	209- - 1		208- - 1
14003-10600	6- - 1	14037-32200	209- - 1
14003-10601	6- - 1	14039-30000	18- - 1
14003-13200	206- - 1		221- - 1
14003-24000	208- - 1		221- - 1

Printed in Japan

PART NO.	PAGE
	221- - 1
14048-15801	209- - 3
14049-15800	209- - 1
14049-72600	207- - 2
14050-15800	209- - 2
14051-15800	209- - 2
	209- - 2
14052-18811	209- - 3
14053-15801	209- - 3
14053-18811	209- - 1
14054-15801	209- - 3
14054-18810	209- - 3
14055-15801	209- - 3
14056-15800	222- - 3
14059-15800	209- - 3
14060-15801	209- - 1
14060-18810	209- - 1
14067-15800	209- - 2
14071-24500	209- - 3
14110-13201	208- - 2
14116-71200	208- - 2
14330-10602	6- - 2
	208- - 2
14330-15800	208- - 2
	209- - 2
14330-18810	209- - 2
14330-18811	209- - 2
15000-10600	7- - 1
15000-10601	7- - 1
15000-10602	8- - 1
	210- - 1
15010-12200	211- - 1
15010-18810	211- - 1
15015-10600	7- - 1
15015-10601	8- - 1
	210- - 1
15015-12200	211- - 1
15015-30000	7- - 1
15019-30100	7- - 1
	8- - 1
	210- - 1
15020-32200	211- - 1
	211- - 1
15021-32200	211- - 1
15023-32200	211- - 1
15030-32200	211- - 1
15036-09400	7- - 2
15036-10600	8- - 1
	210- - 1
15037-09400	7- - 2
	8- - 2
	210- - 2

Printed in Japan

PART NO.	PAGE
15038-10625	7- - 1
	8- - 1
	210- - 1
15040-10600	7- - 2
	8- - 2
	205- - 3
	210- - 2
15040-61000	211- - 2
15042-32200	203- - 2
15050-10600	7- - 1
15050-12200	7- - 1
	8- - 1
	210- - 1
	211- - 1
15050-78200	211- - 1
15051-10601	8- - 1
	210- - 1
15061-30000	5- - 2
	7- - 1
	206- - 3
15066-30000	7- - 2
	8- - 1
	210- - 1
15066-32200	211- - 2
15067-10600	2- - 2
	202- - 2
15068-30000	2- - 2
15071-30800	7- - 2
	8- - 2
	210- - 2
15132-09400	8- - 1
	210- - 1
15132-30000	2- - 5
15132-58000	211- - 1
15133-10601	2- - 5
15133-10602	8- - 1
	210- - 1
15133-10603	210- - 1
15133-30000	2- - 5
15133-58000	211- - 1
15134-10602	8- - 1
	210- - 1
15134-30000	2- - 5
15136-10601	8- - 1
	210- - 1
15136-30000	2- - 5
15136-58000	211- - 1
15137-10600	8- - 1
	210- - 1
15137-58000	211- - 1
15140-10600	2- - 6
	202- - 6

Printed in Japan

PART NO.	PAGE
15140-10601	202- - 6
15140-12201	203- - 4
15140-15800	203- - 4
15146-10600	2- - 6
	202- - 6
15146-10601	202- - 6
15146-12200	203- - 2
15200-09400	9- - 1
15208-13201	211- - 2
15208-13210	211- - 2
15208-32225	9- - 1
15213-09400	9- - 1
15213-09401	9- - 1
15223-30100	9- - 1
15224-43800	9- - 1
15226-09400	9- - 1
15227-43800	9- - 1
15228-43800	9- - 1
15229-09400	9- - 1
15230-43800	9- - 1
15230-44000	9- - 1
15233-85160	15- - 1
	217- - 1
15237-13200	211- - 2
15237-13201	211- - 2
15238-09400	9- - 1
15238-15800	211- - 2
15239-09400	9- - 1
15239-10600	211- - 2
15239-32200	211- - 2
15255-10650	5- - 2
15255-10651	206- - 2
15255-10852	206- - 2
15255-15802	207- - 2
15255-15902	206- - 2
15255-15952	206- - 2
	207- - 2
15262-10600	2- - 5
	202- - 6
15270-11200	206- - 2
	207- - 2
15270-36700	5- - 2
15300-32200	9- - 1
15301-32200	9- - 1
15302-32201	9- - 1
16010-10600	10- - 1
16010-10601	10- - 1
16010-10604	10- - 1
16010-10605	10- - 1
16010-10606	10- - 1
16010-10615	11- - 1
16010-15800	213- - 1

Printed in Japan

PART NO.	PAGE	PART NO.	PAGE
16010-16500	212- - 1	16032-16700	213- - 5
16010-16501	212- - 1	16032-31300	212- - 3
16010-16502	212- - 1	16033-31300	212- - 3
16010-16503	212- - 1	16033-32200	10- - 3
16010-16504	212- - 1	16035-31301	212- - 3
16010-16710	213- - 1		212- - 5
16010-18810	213- - 1	16035-49801	10- - 3
16010-18815	213- - 1		10- - 3
16010-24500	213- - 1	16036-08100	10- - 3
16011-10615	11- - 3	16036-14800	212- - 3
16011-14800	212- - 5	16036-16500	212- - 3
16011-14801	212- - 5	16049-31300	10- - 3
16013-14800	212- - 3		212- - 3
16015-31300	10- - 5	16051-11200	212- - 4
	212- - 3	16051-16500	212- - 4
16020-12200	213- - 5		212- - 5
16020-18810	213- - 5	16052-08103	10- - 3
16027-10400	11- - 1		10- - 3
	213- - 2	16053-31300	10- - 3
16029-31300	10- - 4	16054-14800	212- - 4
	212- - 5	16054-32200	10- - 3
16031-10560	11- - 4	16054-37000	212- - 4
16031-15800	213- - 5	16054-37001	212- - 4
16031-16700	213- - 5	16060-10400	11- - 4
16031-31300	10- - 1	16060-31300	10- - 3
	212- - 1	16061-10400	11- - 3

Printed in Japan

PART NO.	PAGE
	213- - 2
16061-10600	10- - 2
16061-14800	212- - 3
16061-31300	10- - 2
16062-10400	11- - 3
	213- - 3
16062-11200	212- - 3
16062-31300	10- - 3
16063-11201	212- - 2
16063-31300	10- - 2
16063-35000	212- - 2
16064-10400	11- - 3
	213- - 2
16064-11200	10- - 2
	212- - 2
16064-31300	10- - 2
16064-35000	212- - 2
16065-08010	213- - 1
16065-11200	212- - 5
16065-25661	11- - 2
16065-32201	10- - 4
16065-85060	11- - 3
16066-10400	11- - 3
	213- - 3
16071-31301	10- - 4
16072-08110	11- - 2
16072-14610	213- - 4
16072-31300	10- - 2
	212- - 2
16076-14610	213- - 4
16076-31301	10- - 4
	212- - 4
16078-31300	10- - 1
	212- - 1
16079-31301	10- - 2
16079-35000	212- - 2
16080-31300	212- - 2
	212- - 2
16081-10600	10- - 4
16081-12210	11- - 2
16081-14800	212- - 5
16082-10615	11- - 2
16084-14610	213- - 3
16084-98000	11- - 3
16086-31301	10- - 2
16086-35000	212- - 4
16090-31300	212- - 3
16091-10560	11- - 2
	213- - 5
16091-31300	10- - 2
	212- - 2
16091-36900	212- - 5

Printed in Japan

PART NO.	PAGE
16092-14800	212- - 3
16092-31300	10- - 3
16093-08100	10- - 2
16094-10400	11- - 4
	213- - 3
16094-31300	10- - 3
	212- - 3
16094-85060	11- - 4
	213- - 3
16098-08000	11- - 4
16098-08700	212- - 3
16098-10600	10- - 3
16098-31300	10- - 3
16101-10400	11- - 4
	213- - 3
16101-14800	212- - 4
16101-31300	10- - 4
	10- - 4
16101-32200	10- - 4
16103-31301	10- - 3
	212- - 4
16108-31300	10- - 3
	212- - 3
16109-11200	212- - 2
16109-31300	10- - 2
16111-10615	11- - 4

PART NO.	PAGE
	213- - 3
16111-12210	213- - 3
16112-10615	11- - 4
	213- - 3
16114-10400	11- - 3
	213- - 4
16114-31300	10- - 1
	212- - 1
16116-12310	11- - 2
16116-14610	213- - 4
16117-11200	212- - 1
16117-31300	10- - 1
16120-10400	11- - 3
	213- - 2
16121-31300	10- - 2
	212- - 2
16121-85060	213- - 2
16121-85160	11- - 3
16122-12210	11- - 3
	213- - 2
16123-12210	11- - 3
16123-14610	213- - 3
16124-31300	10- - 1
	212- - 1
16124-85060	11- - 3
	213- - 4

Printed in Japan

PART NO.	PAGE
16125-10400	213- - 2
16125-10411	213- - 2
16125-10604	10- - 2
16125-10615	11- - 3
16125-31301	10- - 2
16125-35000	212- - 2
16126-31300	10- - 1
	212- - 1
16127-12210	11- - 3
16127-14610	213- - 3
16127-14800	212- - 2
16129-35000	212- - 3
16129-73012	213- - 1
16130-10400	11- - 1
	213- - 2
16130-11200	212- - 3
16130-31300	10- - 5
16131-31300	10- - 2
16133-10600	10- - 1
16133-14800	212- - 1
16134-10616	11- - 3
16134-15810	213- - 4
16134-16710	213- - 4
16135-12210	11- - 2
16137-34200	10- - 2
16137-36700	212- - 2
16138-14800	212- - 4
16138-32200	10- - 4
16139-31300	212- - 1
16140-11200	212- - 2
16140-31300	10- - 1
16141-08100	10- - 4
16143-10615	11- - 2
16143-32200	10- - 4
	212- - 4
16144-12210	11- - 2
	213- - 2
16144-31300	10- - 2
16144-35000	212- - 2
16145-10400	11- - 1
	213- - 2
16145-31301	10- - 2
	212- - 2
16147-14610	213- - 5
16147-14611	213- - 4
16155-14800	212- - 5
16156-11200	212- - 4
16156-31300	10- - 1
16157-14610	213- - 4
16160-14100	212- - 1
16160-30800	10- - 2
	212- - 2

Printed in Japan

PART NO.	PAGE
16160-36900	10- - 1
16164-31300	212- - 5
16164-85060	11- - 2
16165-10600	10- - 4
16170-35000	212- - 5
16174-10600	6- - 2
16174-12203	6- - 2
16174-13200	208- - 2
16174-14800	212- - 2
16174-15800	208- - 2
	209- - 3
16174-31301	6- - 2
16175-08100	10- - 4
16175-10601	6- - 2
16175-14600	208- - 2
16176-31301	10- - 4
16182-65010	213- - 6
16185-10400	213- - 5
16185-10560	11- - 1
16185-12310	11- - 2
16185-14610	213- - 4
16185-31300	10- - 4
16185-35010	11- - 2
16189-14800	212- - 4
16190-10401	213- - 4
16190-12210	11- - 3
16191-31301	10- - 3
	212- - 4
16192-10600	10- - 2
16192-14100	212- - 1
16193-10400	11- - 3
	213- - 4
16193-31300	10- - 1
	212- - 1
16194-10615	11- - 3
	213- - 5
16194-15810	213- - 5
16195-10600	10- - 4
16195-11200	212- - 4
16195-16501	212- - 4
16196-08100	10- - 4
16204-08100	10- - 4
16204-10600	10- - 3
	212- - 4
16214-31301	10- - 2
	212- - 3
16215-10400	11- - 2
16215-31300	10- - 2
	212- - 2
16215-36700	212- - 5
16216-01300	11- - 1
16217-10401	213- - 4

Printed in Japan

PART NO.	PAGE	PART NO.	PAGE
16217-31300	10- - 2	16280-31300	10- - 2
	212- - 2		212- - 2
16219-10400	11- - 1	16285-14800	212- - 4
	213- - 2	16285-31300	10- - 4
16219-11200	212- - 4	16286-11200	212- - 4
16219-31300	10- - 4	16286-31300	10- - 4
16226-12210	11- - 2	16291-08100	10- - 2
16226-58000	11- - 2	16292-31300	10- - 4
16238-12310	11- - 2	16293-14800	212- - 1
16238-14610	213- - 4	16306-12210	11- - 3
16239-14610	213- - 4	16310-08103	10- - 3
16245-11200	212- - 4		10- - 3
16248-10600	10- - 1		10- - 4
16248-12210	11- - 2	16310-11200	212- - 3
16248-14610	213- - 5	16310-16500	212- - 3
16248-14800	212- - 1		212- - 5
16248-14801	212- - 5	16315-11200	212- - 3
16258-24500	213- - 6	16315-16500	212- - 3
16272-31300	10- - 3	16316-16500	212- - 5
	212- - 4	16317-16500	212- - 5
16276-12210	11- - 3		212- - 5
16277-08100	10- - 1	16322-12210	11- - 4
16277-12210	11- - 3		213- - 5
16277-14610	213- - 4	16324-10400	213- - 1
16277-14611	213- - 4	16324-12210	11- - 1
16277-14800	212- - 1	16325-10400	11- - 1

Printed in Japan

PART NO.	PAGE
	213- - 2
16326-10400	11- - 1
	213- - 2
16327-12210	11- - 3
16331-10400	11- - 4
	213- - 3
16331-10615	11- - 4
16335-10400	11- - 4
	213- - 3
16335-14610	213- - 2
16336-15810	213- - 3
16337-12210	11- - 1
16341-10400	11- - 1
16341-10410	213- - 1
16342-10400	11- - 1
	213- - 1
16343-12210	11- - 1
	213- - 1
16344-10400	11- - 1
	213- - 1
16345-10400	11- - 1
	213- - 1
16346-10615	11- - 1
	213- - 1
16346-12210	213- - 1
16347-10400	11- - 1

PART NO.	PAGE
	213- - 1
16351-10400	11- - 1
	213- - 2
16352-12210	11- - 2
16354-12210	11- - 1
16354-15810	213- - 2
16354-16710	213- - 2
16355-12210	11- - 1
16356-12210	11- - 4
	213- - 3
16357-12210	11- - 4
	213- - 3
16358-12210	11- - 4
	213- - 3
16358-12211	213- - 3
16359-12210	11- - 4
	213- - 3
16360-10600	11- - 4
16361-10600	11- - 4
16361-15800	213- - 6
16361-16700	213- - 6
16361-24500	213- - 6
16362-10600	11- - 4
16362-16700	213- - 6
16365-10600	11- - 4
16365-14600	213- - 6

Printed in Japan

PART NO.	PAGE
16370-10600	11- - 5
16370-15800	213- - 7
16370-18810	213- - 7
16371-14600	213- - 8
16372-14600	213- - 8
16373-12200	11- - 5
16373-15800	213- - 7
16373-18810	213- - 7
16373-73400	213- - 8
16374-12200	11- - 5
16374-14600	213- - 7
16374-18810	213- - 7
16375-12200	11- - 5
16375-14600	213- - 7
16375-18810	213- - 7
16376-10601	11- - 5
16378-14600	213- - 6
16379-14600	213- - 6
16379-14601	213- - 6
16380-15800	213- - 6
16380-18810	213- - 6
16381-10615	11- - 2
16382-10615	11- - 2
16383-12210	11- - 2
16384-12210	11- - 2
16385-12210	11- - 2
16386-10615	11- - 2
16400-10600	15- - 1
	217- - 1
16400-10601	15- - 1
	217- - 1
16400-10602	15- - 1
	217- - 1
16402-50000	15- - 1
	217- - 1
16403-50000	15- - 1
	217- - 1
16406-50000	15- - 1
	217- - 1
16407-87260	15- - 1
	217- - 1
16408-85060	15- - 1
	217- - 1
16409-85060	15- - 1
	217- - 1
16410-85060	15- - 1
	217- - 1
16411-87261	15- - 1
	217- - 1
16419-10601	15- - 1
	217- - 2
16420-30100	14- - 2

Printed in Japan

PART NO.	PAGE
16420-72600	216- - 3
16439-04101	15- - 1
	217- - 2
16500-10611	13- - 1
16500-10612	215- - 1
16500-10613	215- - 1
16500-10800	12- - 1
16500-10801	12- - 1
16500-13200	214- - 1
16500-14902	214- - 1
16500-15800	215- - 1
16500-19400	215- - 1
16500-24000	214- - 1
	214- - 1
16516-10612	215- - 1
16523-12200	13- - 1
	215- - 1
16523-13200	214- - 2
16523-34201	12- - 1
16523-73400	215- - 2
16526-10611	13- - 1
16526-10800	12- - 1
	214- - 1
16533-36700	12- - 1
	214- - 2
16536-16300	215- - 1
16536-36700	12- - 1
	214- - 1
16536-73000	214- - 1
16546-10600	12- - 1
	214- - 1
16546-10611	13- - 1
	215- - 1
16546-10613	215- - 1
16546-10800	214- - 1
16546-16300	215- - 1
16546-61800	214- - 1
	214- - 1
16547-08000	12- - 1
	214- - 1
16547-10611	13- - 1
	13- - 1
16547-10612	215- - 1
	215- - 1
16547-73000	214- - 1
16548-10600	12- - 1
	214- - 1
16548-10611	13- - 1
16548-10612	215- - 1
16548-16300	215- - 1
16551-08000	13- - 1
16555-37500	215- - 1

Printed in Japan

PART NO.	PAGE	PART NO.	PAGE
16560-10600	12- - 1	17015-13211	216- - 1
16560-13200	214- - 2	17015-13900	216- - 2
16561-10600	12- - 1	17015-32200	216- - 2
16561-13200	214- - 2	17016-00100	216- - 1
16568-08000	13- - 1		216- - 2
16568-37500	215- - 1	17016-01300	14- - 1
16571-13900	214- - 2		14- - 2
16571-15800	215- - 2	17019-50000	14- - 1
16571-19400	215- - 2		216- - 2
16571-24000	214- - 2	17019-85060	14- - 1
16572-10801	214- - 2		216- - 1
	215- - 2	17020-00100	14- - 2
16573-10600	12- - 1		216- - 2
16573-13200	214- - 2	17020-85060	216- - 1
16574-13200	214- - 2	17022-08000	14- - 2
16575-10600	12- - 1	17025-50000	14- - 2
17007-14602	216- - 4	17040-08001	14- - 2
17010-08001	14- - 1	17042-08000	14- - 2
17010-10610	14- - 1	17047-00100	14- - 2
17010-12201	216- - 2	17047-38700	216- - 2
17010-13201	216- - 1	17047-50000	216- - 1
17010-13900	216- - 1	17048-00100	14- - 2
	216- - 1	17048-13910	216- - 1
17010-17300	216- - 2	17048-38700	216- - 2
17010-18810	216- - 2	17049-00100	14- - 2
17015-01300	14- - 1	17051-32200	216- - 2

Printed in Japan

PART NO.	PAGE
17052-00100	14- - 1
17052-30100	216- - 2
17052-37010	216- - 1
17053-01300	14- - 1
17053-13910	216- - 1
17053-32200	216- - 1
	216- - 2
17053-32201	216- - 1
	216- - 2
17061-50000	14- - 1
	216- - 1
	216- - 2
17065-13210	216- - 1
17065-18000	216- - 2
17065-50000	14- - 1
17065-52600	14- - 1
17065-58000	216- - 2
17072-01300	14- - 1
	216- - 2
17072-32200	216- - 1
17075-13200	216- - 1
17075-30100	14- - 1
	216- - 2
17075-50000	14- - 1
17076-13211	216- - 1
17076-13900	216- - 3
17076-61002	216- - 3
17077-01300	14- - 1
17081-01300	14- - 1
17082-01300	14- - 1
17082-13211	216- - 1
17082-13900	216- - 3
17082-61000	216- - 3
17083-85060	14- - 1
17084-85060	14- - 1
17089-13210	216- - 1
17089-13900	216- - 2
17089-58000	14- - 1
	216- - 2
	216- - 2
17090-32200	216- - 1
17090-50000	14- - 1
	216- - 2
17097-13200	216- - 3
17099-30000	14- - 2
17099-72600	216- - 3
17103-01300	15- - 1
	217- - 1
17103-10600	16- - 1
	218- - 1
17103-10601	15- - 1
	217- - 1

Printed in Japan

PART NO.	PAGE
17103-12200	14- - 2
	15- - 1
	216- - 3
	217- - 1
17103-18810	216- - 3
17103-50000	14- - 2
	216- - 1
	216- - 3
17103-85060	216- - 2
17106-14601	216- - 4
17106-18810	216- - 4
17107-12200	216- - 4
17201-10600	16- - 1
	218- - 1
17201-10650	218- - 1
17201-10900	16- - 2
17201-10901	16- - 2
	218- - 2
17213-10600	16- - 1
	218- - 1
17213-24000	218- - 1
17230-50000	16- - 1
17232-10600	16- - 1
	218- - 1
17232-10900	16- - 2
	218- - 2
17234-10900	16- - 2
	218- - 2
17251-10601	16- - 1
	218- - 1
17251-10900	16- - 2
	218- - 2
17270-10950	95- - 9
17291-10601	16- - 1
17291-10900	16- - 2
17291-13400	16- - 2
	218- - 2
17293-04100	16- - 1
	16- - 2
	218- - 2
17293-10900	16- - 2
	218- - 2
17301-09400	16- - 1
	218- - 1
17311-09400	16- - 1
	218- - 1
17410-10600	16- - 1
	218- - 1
17410-10900	16- - 3
	218- - 3
17412-10600	16- - 1
	218- - 1

Printed in Japan

PART NO.	PAGE
17416-10900	16- - 3
	218- - 3
17501-10601	16- - 2
	218- - 2
17501-10901	16- - 2
	218- - 2
17501-15801	218- - 2
17501-24600	218- - 2
17518-10600	15- - 1
	217- - 1
17518-15801	217- - 1
17522-10600	14- - 2
17522-10605	14- - 2
17522-13201	216- - 3
17522-15801	216- - 3
17522-16701	216- - 3
17522-18811	216- - 3
17522-24000	216- - 3
17524-15800	213- - 7
	216- - 4
17525-10605	14- - 2
	216- - 3
17525-15801	213- - 7
	216- - 4
17525-16700	216- - 3
17541-30000	16- - 2
	218- - 2
17543-10600	16- - 2
	16- - 2
	218- - 2
	218- - 2
17544-04100	16- - 2
	218- - 2
18010-10601	17- - 1
	219- - 1
18010-10800	17- - 1
	219- - 1
18010-15801	220- - 1
18010-16500	219- - 1
18010-20201	219- - 1
	220- - 1
18010-24501	219- - 1
	220- - 1
18010-24505	220- - 1
18014-15800	219- - 1
	220- - 1
18017-15800	220- - 1
18019-10600	17- - 1
	219- - 1
	220- - 1
18019-15800	219- - 1
	220- - 1

Printed in Japan

PART NO.	PAGE
18020-10601	17- - 1
	219- - 1
	220- - 1
18022-10600	17- - 2
	219- - 3
	220- - 3
18022-15800	213- - 7
	220- - 3
18022-61000	17- - 2
18023-61000	17- - 2
	219- - 3
	220- - 3
18027-15800	213- - 8
	220- - 3
18027-61000	17- - 3
	219- - 3
	220- - 3
18028-15800	213- - 8
	220- - 3
18028-61000	17- - 3
	213- - 8
	219- - 3
	220- - 2
	220- - 3
18043-24500	220- - 2
18043-61000	17- - 1
	219- - 2
	220- - 2
18100-10601	17- - 1
	219- - 2
18100-10605	17- - 1
	220- - 2
18100-10800	17- - 1
	219- - 2
18100-16000	220- - 2
18101-16500	219- - 2
18101-16700	220- - 2
18110-73001	219- - 1
	220- - 1
18116-10600	17- - 2
	219- - 3
18116-10605	17- - 2
	220- - 3
18116-15801	213- - 7
18116-16000	220- - 3
18124-15800	220- - 4
18124-73000	213- - 8
18125-16500	219- - 2
	220- - 2
18126-61000	17- - 1
	219- - 2
	220- - 2

Printed in Japan

PART NO.	PAGE
18127-61000	17- - 2
	219- - 2
	220- - 2
18128-10800	17- - 2
	219- - 3
18128-16000	220- - 2
18128-24500	220- - 2
18129-10600	17- - 2
	219- - 2
18129-10605	17- - 2
18129-16700	220- - 2
18137-10600	17- - 1
	213- - 8
	219- - 1
	220- - 1
	220- - 4
18137-10605	17- - 1
	220- - 4
18138-10602	17- - 2
	219- - 3
18138-10800	17- - 2
	219- - 3
	220- - 3
18138-15801	213- - 7
18138-16001	220- - 3
18141-10601	17- - 1
	219- - 2
	220- - 1
18141-10800	17- - 1
	219- - 2
18141-16000	220- - 2
18142-10601	17- - 3
	219- - 3
18142-10605	17- - 3
18142-10606	220- - 3
18146-10601	17- - 3
	219- - 4
18146-10605	17- - 3
	220- - 4
18150-10601	17- - 3
	219- - 4
18150-10605	17- - 3
	220- - 4
18151-10600	17- - 3
	219- - 4
18170-10602	17- - 3
	219- - 4
18170-10605	17- - 3
	220- - 4
18206-15800	220- - 2
18222-15800	213- - 8
	220- - 4

Printed in Japan

PART NO.	PAGE
18223-73000	213- - 8
	220- - 3
18224-73000	213- - 8
	220- - 3
18243-61500	213- - 8
	220- - 2
	220- - 3
	220- - 4
18300-15801	213- - 8
	220- - 4
18302-15801	213- - 8
	220- - 4
18303-15800	213- - 8
	220- - 4
18410-10601	17- - 3
18410-10602	17- - 3
18410-10605	17- - 4
18410-13200	219- - 4
18410-15800	220- - 4
18410-15801	220- - 4
18410-16701	220- - 4
18410-16702	220- - 4
18415-10600	17- - 4
18415-12900	17- - 4
18415-13200	219- - 4
	220- - 4
18417-15800	220- - 5
18417-72600	220- - 5
18455-30000	213- - 6

Printed in Japan

PART NO.	PAGE
20000	
20010-10605	18- - 1
20010-24501	221- - 1
20011-10650	18- - 1
20011-15800	221- - 1
20011-16500	221- - 1
20013-04150	18- - 1
20014-04100	18- - 1
20015-04100	18- - 1
20020-16700	221- - 1
20041-15801	221- - 1
20101-10600	18- - 2
20101-16500	221- - 2
20120-10600	18- - 4
20132-08700	18- - 2
20132-08750	18- - 2
20133-08700	18- - 2
20134-32700	18- - 1
20136-10600	18- - 2
	221- - 2
20200-24500	221- - 1
20201-10650	18- - 4
20201-10651	18- - 4
20301-10651	18- - 1
20301-16500	221- - 2
20320-10600	18- - 2
20401-16500	221- - 3
20601-10600	18- - 1
20601-14800	221- - 1
20602-18000	221- - 1
20605-15800	221- - 1
20611-10601	18- - 2
	221- - 2
20622-10600	18- - 3
	18- - 3
	18- - 4
	18- - 4
	18- - 4
	221- - 2
	221- - 3
	221- - 3
20623-10600	18- - 4
	221- - 2
20624-10650	18- - 3
20631-10650	18- - 3
20632-10600	18- - 4
	221- - 3
	221- - 3
20641-10600	95- - 1
	306- - 2
20643-10600	18- - 3

Printed in Japan

PART NO.	PAGE
20661-16550	221- - 2
20671-16500	221- - 3
20672-16500	221- - 3
20711-10605	18- - 1
	221- - 1
20711-15800	221- - 1
21010-08000	19- - 1
21010-10600	19- - 1
21010-13200	19- - 1
	222- - 1
21010-13201	222- - 1
21010-15800	222- - 1
21010-15801	222- - 1
21010-18810	222- - 1
21010-18811	222- - 1
21012-01300	19- - 2
	222- - 2
21013-08000	19- - 1
21013-13200	19- - 1
	222- - 2
21013-14600	222- - 2
21013-66001	222- - 2
	222- - 2
21014-03000	19- - 1
21014-13200	19- - 1
	222- - 2

PART NO.	PAGE
	222- - 4
21014-14600	222- - 2
21014-66001	222- - 2
21022-04001	19- - 1
21022-13200	19- - 1
	222- - 2
21022-13201	222- - 2
21022-14600	222- - 2
21022-62200	222- - 2
21023-61000	19- - 1
21026-04000	19- - 1
21026-04025	19- - 2
21026-10600	19- - 1
21026-13225	19- - 2
	222- - 4
21026-13226	222- - 4
21026-14600	222- - 1
21026-62225	222- - 4
21026-71200	222- - 1
	222- - 4
21026-73000	222- - 1
	222- - 4
21027-04000	19- - 1
21027-10600	19- - 1
21027-61000	222- - 1
	222- - 4

Printed in Japan

PART NO.	PAGE
21027-62200	222- - 2
21027-73000	222- - 1
	222- - 4
21035-04000	19- - 1
21035-13200	19- - 1
	222- - 1
21035-13201	222- - 1
21035-14600	222- - 1
21043-04000	19- - 1
	222- - 1
21043-73000	222- - 1
21051-10600	19- - 2
	222- - 3
21051-10800	19- - 2
	222- - 3
21051-15800	222- - 3
21051-16700	222- - 3
21054-04000	19- - 1
	222- - 2
21054-15800	222- - 2
21054-18810	222- - 2
21060-07200	19- - 2
	222- - 3
21060-15801	222- - 3
21064-10600	19- - 2
	222- - 3
21064-19000	222- - 3
21067-10600	19- - 2
	222- - 4
21067-10800	19- - 2
	222- - 4
21067-15800	222- - 4
21067-16700	222- - 4
21074-08000	19- - 2
21074-13200	19- - 2
	222- - 2
	222- - 4
21074-14600	222- - 2
21110-10800	28- - 4
21110-10801	28- - 4
	228- - 5
21112-10800	28- - 4
21112-10801	28- - 4
	228- - 5
21113-10800	28- - 4
	228- - 5
21114-10800	28- - 4
21114-10801	28- - 4
	228- - 5
21115-10800	28- - 4
	228- - 5
21116-10800	28- - 4

Printed in Japan

PART NO.	PAGE
	228- - 5
21117-10800	28- - 5
	228- - 5
21118-10800	28- - 5
	228- - 5
21120-10800	28- - 4
	228- - 5
21121-10800	28- - 4
21121-10801	28- - 4
	228- - 5
21121-13900	228- - 5
21200-61000	5- - 2
	206- - 2
	207- - 3
21200-61001	5- - 2
	206- - 2
	207- - 3
21200-61002	206- - 2
	207- - 3
21207-30000	5- - 2
	206- - 2
21211-04100	2- - 6
21211-08000	20- - 1
21211-12600	223- - 1
21211-12601	2- - 6
	202- - 6
	203- - 4
	223- - 1
21211-18000	203- - 4
21211-73400	223- - 1
21400-10600	20- - 1
21400-10601	20- - 1
21400-13210	20- - 1
21400-13211	223- - 1
21400-16500	223- - 1
21400-16700	223- - 1
21400-18400	223- - 1
21400-18700	223- - 1
21400-19400	223- - 1
21430-10600	20- - 1
	223- - 1
21430-30001	223- - 1
21475-18400	223- - 2
21476-18400	223- - 2
21500-24500	223- - 1
21501-10600	20- - 1
21501-10800	20- - 1
21501-15901	223- - 2
21501-16900	223- - 2
21501-18700	223- - 2
21503-10800	20- - 1
21503-10801	20- - 1

Printed in Japan

PART NO.	PAGE	PART NO.	PAGE
21503-13900	20- - 1		225- - 1
21503-16900	223- - 2	22102-01303	24- - 2
21503-18400	223- - 2	22102-50000	22- - 1
21503-24500	223- - 2	22103-50000	23- - 1
21504-30000	20- - 1		23- - 1
	223- - 2		225- - 1
	223- - 2		225- - 2
21504-30050	76- - 4	22107-01302	24- - 1
	287- - 4	22108-10610	24- - 1
21505-28000	223- - 2	22108-13201	23- - 1
21506-28000	223- - 2		225- - 1
21621-24500	223- - 2	22108-14600	225- - 1
21623-24500	223- - 2	22108-30102	22- - 1
21631-24500	223- - 2	22109-71300	23- - 1
	223- - 3		225- - 1
21631-73701	223- - 3	22110-13301	23- - 1
21641-24500	223- - 2	22110-14600	225- - 1
21641-73700	223- - 2	22110-16501	225- - 1
22005-16500	228- - 4	22116-01302	24- - 1
22005-16510	228- - 4	22116-50000	22- - 1
22100-08300	22- - 1	22117-10610	24- - 2
22100-10605	24- - 1	22117-30100	22- - 1
22100-13301	23- - 1	22117-32200	23- - 1
22100-16501	225- - 1		225- - 1
22100-18300	225- - 1	22117-35060	225- - 1
22102-08300	23- - 1	22118-10610	24- - 2

Printed in Japan

PART NO.	PAGE
22118-43800	23- - 1
	225- - 2
22118-85060	23- - 1
	225- - 1
22119-03070	22- - 1
22119-10400	225- - 2
22119-10610	24- - 2
22119-13201	23- - 1
	225- - 2
22121-01302	24- - 2
22121-71300	23- - 2
	225- - 2
22122-85060	22- - 1
22123-01302	24- - 1
22124-10610	24- - 1
22127-03070	22- - 1
22127-10610	24- - 1
22128-10610	24- - 1
22132-08300	22- - 1
22132-10610	24- - 1
22132-13301	23- - 1
22132-14600	225- - 1
22132-30100	22- - 1
22132-71300	225- - 1
22132-85060	22- - 1
	23- - 1
	225- - 1
22136-10610	24- - 1
22136-30101	22- - 1
22136-71300	23- - 1
	225- - 1
22139-85060	22- - 1
	23- - 2
	225- - 2
22140-10610	24- - 1
22143-50000	22- - 1
22145-71300	23- - 1
22145-71301	225- - 1
22146-10360	22- - 2
22147-32210	24- - 1
22148-14600	225- - 2
22152-01302	24- - 2
22155-86160	22- - 1
22156-01302	24- - 1
	226- - 2
22156-85060	11- - 2
	22- - 2
	213- - 5
22157-01302	24- - 1
22157-50001	22- - 2
22157-71300	23- - 1
	225- - 1

Printed in Japan

PART NO.	PAGE
22162-01302	24- - 2
22162-13201	23- - 2
	225- - 2
22162-30104	22- - 2
22162-71300	225- - 2
22165-10610	24- - 2
22165-30101	22- - 2
	23- - 2
	225- - 2
22167-01302	24- - 2
22167-03020	22- - 2
22167-71300	23- - 1
	225- - 2
22168-30100	22- - 2
22168-71300	23- - 1
	225- - 2
22171-00800	225- - 2
22171-01302	24- - 2
22171-30100	22- - 2
22172-30100	28- - 1
	228- - 1
22175-09400	4- - 2
22177-18810	229- - 1
22178-13200	28- - 1
	228- - 1
22178-14600	229- - 1
22178-30000	28- - 1
22179-01302	24- - 1
22179-10600	28- - 1
	228- - 1
22179-32200	229- - 1
22180-13201	23- - 1
	225- - 1
22180-14600	225- - 1
22180-30100	22- - 1
22180-71200	229- - 1
22182-10610	24- - 2
22182-30101	22- - 1
22182-71300	23- - 1
	225- - 2
22183-10610	24- - 2
22183-30100	22- - 1
22183-71300	23- - 1
	225- - 2
22184-01302	24- - 1
22184-50000	22- - 1
22185-50000	22- - 1
	213- - 5
22185-85060	22- - 1
22186-01302	24- - 1
22195-03020	22- - 2
22198-01302	24- - 2

Printed in Japan

PART NO.	PAGE
22200-01302	24- - 1
22201-09600	26- - 2
22201-10600	27- - 2
	227- - 2
22201-30100	22- - 2
22201-71300	23- - 1
	225- - 1
22203-01302	24- - 1
	25- - 1
22203-32210	226- - 2
	226- - 2
	226- - 2
22203-50000	22- - 2
22204-01302	24- - 1
22204-30100	22- - 2
22205-30100	22- - 2
22206-01302	24- - 2
22206-30100	22- - 2
22208-13200	28- - 1
	225- - 2
	228- - 1
22210-10610	24- - 1
22211-10610	24- - 1
22212-10610	24- - 2
22213-71311	226- - 2
22301-08300	22- - 2
22301-10610	24- - 2
22301-13301	23- - 2
22301-14600	225- - 2
22301-16501	225- - 2
22308-10610	24- - 2
22313-01302	24- - 2
22318-01300	28- - 1
22318-10605	28- - 1
22318-12200	229- - 1
22318-12201	229- - 1
22318-13200	28- - 1
	228- - 1
22318-14400	28- - 1
	228- - 1
22401-10605	228- - 1
	229- - 2
22401-58000	28- - 1
	228- - 1
	229- - 2
22401-58001	28- - 1
	228- - 1
	229- - 2
22403-01302	24- - 2
22403-03020	22- - 2
22403-03021	22- - 2
22403-13201	23- - 1

Printed in Japan

PART NO.	PAGE
	225- - 1
22403-14600	225- - 1
22410-01300	28- - 1
22414-01300	28- - 2
22431-10560	229- - 2
22433-10605	28- - 3
22433-14400	28- - 3
	228- - 4
	229- - 1
22433-14600	229- - 1
22433-14900	28- - 3
	228- - 4
22433-31300	28- - 3
22450-08800	28- - 2
22450-10800	28- - 2
22450-13200	28- - 2
	228- - 2
22450-13225	228- - 1
22450-14800	228- - 2
22450-14900	228- - 3
22450-17000	228- - 3
22450-38700	229- - 2
22450-38725	229- - 2
22451-10800	28- - 2
22451-13200	28- - 2
	228- - 1
22451-17000	228- - 3
22451-38700	229- - 2
22452-10600	28- - 2
22452-10800	28- - 2
22452-13200	28- - 2
	228- - 1
22452-17000	228- - 3
22452-38700	229- - 2
22453-10800	28- - 2
22453-13200	28- - 2
	228- - 2
22453-17000	228- - 4
22453-38700	229- - 2
22454-10600	28- - 2
22454-10800	28- - 2
22454-13200	28- - 2
	228- - 2
22454-17000	228- - 4
22454-38700	229- - 2
22460-14400	28- - 3
	228- - 4
	229- - 2
22460-14600	229- - 2
22948-14600	225- - 2
22951-10400	229- - 1
22952-10401	229- - 1

Printed in Japan

PART NO.	PAGE
22954-10400	229- - 1
23100-16510	226- - 1
23100-16512	226- - 1
	226- - 1
23100-16710	226- - 1
23100-61200	25- - 1
23102-12210	25- - 1
23102-14610	226- - 1
23103-50000	26- - 1
23107-14610	226- - 2
23107-61200	25- - 2
23108-12210	25- - 1
23108-14610	226- - 1
23108-16512	226- - 1
23109-12210	25- - 2
23109-30000	11- - 4
	213- - 4
	213- - 5
23116-12210	25- - 1
23116-14610	226- - 1
23117-12210	25- - 1
23118-12210	25- - 2
23118-14610	226- - 2
23120-12210	25- - 2
23120-14610	226- - 1
23120-14611	226- - 2
23121-12210	25- - 2
	25- - 2
23121-14610	226- - 2
23122-12210	25- - 2
	25- - 2
23123-12210	25- - 2
23123-14610	226- - 2
23127-12211	25- - 1
23127-14610	226- - 1
23127-16512	226- - 1
23129-12210	25- - 1
23130-12210	25- - 1
23131-12210	25- - 1
23131-14610	226- - 1
23132-50900	27- - 2
	227- - 2
23132-85060	24- - 2
23133-12210	25- - 1
23133-14610	226- - 1
23135-12210	25- - 1
23135-14610	226- - 1
23138-12210	25- - 1
23139-12210	25- - 1
	226- - 2
23139-12900	226- - 2
	229- - 3

Printed in Japan

PART NO.	PAGE	PART NO.	PAGE
23139-18810	226- - 3	23168-15800	229- - 3
23139-85060	24- - 1	23174-10600	28- - 3
	25- - 1		228- - 3
	25- - 2	23174-10800	28- - 4
	25- - 2		228- - 4
	26- - 2	23174-13200	228- - 3
23149-58400	11- - 2	23174-15800	229- - 3
23151-16510	226- - 2	23183-12210	25- - 1
23151-61200	25- - 2	23190-30000	11- - 3
23152-12210	25- - 2	23195-12210	25- - 2
23152-35010	226- - 2	23196-12210	25- - 1
23153-12210	25- - 2	23220-12210	25- - 1
23153-35010	226- - 2	23221-12210	25- - 1
23156-12210	25- - 1	23222-16512	226- - 2
23156-14610	226- - 2	23230-12210	25- - 1
23157-14610	226- - 2	23230-14610	226- - 1
23158-12210	25- - 1	23231-61210	226- - 1
23158-14610	226- - 2	23232-61210	226- - 1
23159-14610	226- - 2	23233-14610	226- - 2
23160-12210	25- - 2	23300-09500	26- - 1
23161-14610	226- - 2	23300-10600	227- - 1
23162-12210	226- - 2	23300-15800	227- - 1
23164-12210	25- - 2	23305-09500	26- - 2
23168-10600	28- - 2		27- - 2
	228- - 2		227- - 2
23168-13200	228- - 2	23306-09500	26- - 2

Printed in Japan

PART NO.	PAGE
23306-10600	27- - 1
	227- - 2
23306-15800	227- - 2
23309-10600	27- - 2
	227- - 2
23310-09500	26- - 1
23310-10600	27- - 1
	227- - 1
23310-15800	227- - 1
23312-09500	26- - 1
23312-10600	27- - 1
	227- - 1
23318-09500	26- - 2
23318-10600	27- - 1
	227- - 2
23319-09600	26- - 2
23319-10600	27- - 1
	227- - 2
23321-09900	26- - 1
	27- - 1
	227- - 1
23322-09500	26- - 2
23322-10600	27- - 1
	227- - 2
23323-09500	26- - 2
23323-10600	27- - 1
	227- - 2
23333-09900	26- - 1
	27- - 1
	227- - 1
23335-85060	11- - 3
23337-09500	26- - 1
23337-09501	26- - 1
23337-10600	27- - 1
	227- - 1
23338-09900	26- - 1
	27- - 1
	227- - 1
23339-09500	26- - 1
23340-10600	27- - 1
	227- - 1
23340-15800	227- - 2
23342-09901	26- - 2
23343-09500	26- - 2
23343-10600	27- - 2
	227- - 2
23343-15800	227- - 2
23351-09600	26- - 1
23352-09600	26- - 2
23352-09610	25- - 1
	25- - 2
	226- - 2

Printed in Japan

PART NO.	PAGE
23352-12210	226- - 2
23353-10600	27- - 1
	227- - 1
23369-10600	27- - 1
	227- - 1
23369-43600	26- - 1
23370-09600	26- - 1
	27- - 1
	227- - 1
23372-09600	26- - 1
23372-10600	27- - 1
	227- - 1
23373-43600	26- - 1
23374-09500	26- - 1
23374-10600	27- - 1
	227- - 1
23379-09900	27- - 1
	227- - 1
23380-09900	27- - 1
	227- - 1
23380-09902	26- - 1
23380-10600	227- - 1
23383-09500	26- - 1
23383-10600	27- - 1
	227- - 1
23384-09601	26- - 2
23391-43300	26- - 2
	27- - 1
	227- - 2
23393-09900	26- - 2
23441-09500	26- - 1
23441-10600	227- - 1
23442-09600	26- - 1
23442-10600	27- - 1
	227- - 1
23443-09600	26- - 1
23444-09600	26- - 1
23445-09600	26- - 2
23445-10600	27- - 2
	227- - 2
23445-15800	227- - 2
23446-10600	27- - 2
	227- - 2
23446-15800	227- - 2
23453-09500	227- - 1
23500-10600	28- - 4
23500-12200	28- - 3
23500-12201	28- - 3
23500-16510	228- - 4
	229- - 2
23500-16513	228- - 4
23502-30000	11- - 1

Printed in Japan

PART NO.	PAGE
.....	213- - 1
23547-25660.....	26- - 1
.....	27- - 1
.....	227- - 1
23552-09400.....	213- - 5
23553-25660.....	22- - 1
24011-10800.....	29- - 1
24012-10600.....	29- - 1
24012-10800.....	29- - 1
24012-13200.....	29- - 1
24012-15800.....	230- - 1
24012-15810.....	230- - 1
24012-15820.....	230- - 1
24012-16500.....	230- - 1
24012-16520.....	230- - 1
24012-17100.....	230- - 1
24012-24510.....	230- - 1
24013-10800.....	29- - 1
24013-10801.....	29- - 1
24013-12400.....	29- - 1
24013-12401.....	29- - 1
.....	29- - 1
24013-12501.....	29- - 2
24013-12502.....	29- - 1
24013-13300.....	29- - 1
24013-14300.....	29- - 1
24013-14400.....	29- - 2
24013-16500.....	230- - 1
24013-16900.....	230- - 1
24013-17000.....	230- - 2
24013-17100.....	230- - 1
24013-17101.....	230- - 1
24013-18701.....	230- - 2
24013-18702.....	230- - 2
24013-18720.....	230- - 2
24013-24000.....	230- - 1
24013-24500.....	230- - 1
24013-24520.....	230- - 1
24014-10601.....	29- - 2
.....	230- - 2
.....	230- - 2
24014-18400.....	230- - 2
24014-19600.....	230- - 2
24015-10600.....	29- - 2
.....	230- - 3
.....	230- - 3
24015-10900.....	230- - 3
24016-10900.....	29- - 2
.....	230- - 3
24016-14600.....	229- - 2
24023-10605.....	28- - 3
.....	228- - 4

Printed in Japan

PART NO.	PAGE
24025-18701	230- - 4
24025-24100	230- - 4
24035-10600	29- - 2
24038-15800	230- - 3
24041-30100	46- - 3
24050-27160	77- - 2
	288- - 1
24051-02700	16- - 1
	218- - 1
	230- - 2
24051-10600	37- - 2
	239- - 2
24080-10600	29- - 3
24080-16500	230- - 3
24080-17000	230- - 3
24080-18800	230- - 3
24080-18810	230- - 3
24110-10600	29- - 3
24110-13200	29- - 3
24110-16500	230- - 3
24110-18800	230- - 3
24110-18810	230- - 3
24141-10600	29- - 3
	230- - 3
24149-12400	29- - 2
	230- - 2
24149-15800	230- - 2
24149-18800	230- - 3
24160-11400	29- - 2
24163-11400	29- - 3
	230- - 3
24170-20200	230- - 3
24175-11500	29- - 2
	230- - 3
24190-11500	31- - 2
	231- - 5
24195-11500	31- - 2
	231- - 5
24197-01700	93- - 2
	304- - 2
24201-10600	29- - 2
24250-89915	218- - 1
	218- - 1
	230- - 2
24252-10600	29- - 1
	230- - 1
24253-10600	29- - 2
	218- - 1
	230- - 2
24254-10600	29- - 2
	230- - 2
24255-10600	29- - 2

Printed in Japan

PART NO.	PAGE
24256-10600	91- - 4
	93- - 2
	302- - 9
	304- - 2
24256-36700	17- - 4
	219- - 4
	220- - 5
24299-14800	226- - 1
24299-14801	226- - 1
24331-11700	29- - 3
24331-12100	29- - 3
24410-03021	34- - 1
	234- - 1
24410-03022	34- - 1
24410-03023	34- - 1
	234- - 1
24410-03024	34- - 1
24410-03025	34- - 2
24410-03026	34- - 2
24410-09401	34- - 1
	234- - 1
24410-09403	34- - 1
	234- - 1
24410-09405	34- - 1
	234- - 1
24420-10801	34- - 2
24428-03020	34- - 2
24428-09400	34- - 1
24428-16500	234- - 1
24428-18802	234- - 1
24428-24000	234- - 1
24430-10600	34- - 1
24430-10601	34- - 1
24431-14800	234- - 1
24438-10600	34- - 1
	34- - 2
24438-10601	34- - 1
	234- - 1
24438-15800	234- - 1
24439-10600	34- - 1
	234- - 1
24439-10601	234- - 1
24800-16700	239- - 3
24820-10800	37- - 1
24820-13300	37- - 1
	239- - 1
24820-13800	37- - 1
	239- - 1
24820-16500	239- - 1
24820-16700	239- - 3
24820-17000	239- - 1
24820-19101	239- - 1

Printed in Japan

PART NO.	PAGE	PART NO.	PAGE
24820-24000	239- - 1		239- - 2
24850-13300	37- - 1	25030-13200	37- - 1
	239- - 1		239- - 2
24850-13800	37- - 1	25030-16500	239- - 2
	239- - 1	25035-10600	29- - 2
24850-15800	239- - 3		230- - 3
24850-16500	239- - 1	25050-10801	37- - 1
24850-17000	239- - 1	25050-11601	37- - 1
24855-16700	239- - 3	25050-24000	239- - 2
24860-13200	37- - 1	25050-89914	239- - 2
	239- - 1	25050-89916	239- - 2
24860-15800	239- - 3	25050-89917	239- - 2
24870-15800	239- - 3	25050-89920	239- - 2
24880-13200	37- - 1	25055-10601	37- - 2
	239- - 1	25055-10602	37- - 2
24880-16500	239- - 1	25055-10800	37- - 2
24880-16700	239- - 3	25060-10600	37- - 1
25010-10801	37- - 1	25060-13200	16- - 1
25010-11601	37- - 1		218- - 2
	37- - 1	25070-15800	231- - 1
25010-15801	239- - 3		239- - 3
25010-16500	239- - 2	25080-10600	37- - 1
	290- - 2	25080-13200	239- - 2
25020-13200	37- - 1	25080-62200	239- - 2
	239- - 1		239- - 3
25021-02700	37- - 2	25150-10600	30- - 1

Printed in Japan

PART NO.	PAGE
	98- - 1
	98- - 2
	98- - 2
	231- - 1
	310- - 1
	310- - 1
	310- - 2
	310- - 3
	310- - 3
25160-10600	30- - 1
25160-11400	30- - 1
25160-13200	30- - 1
	231- - 1
25160-13201	30- - 1
	231- - 1
25165-10600	30- - 1
25165-11400	30- - 1
25165-13200	30- - 1
	231- - 1
25169-89900	231- - 2
	238- - 2
25230-10600	31- - 1
25230-13200	31- - 1
	231- - 4
25230-89900	231- - 4
25240-09400	30- - 1
25240-89900	30- - 1
	231- - 1
	239- - 2
25240-89901	231- - 1
25241-30000	2- - 6
	202- - 6
25250-30100	37- - 2
25251-30100	37- - 2
25260-10601	30- - 1
25260-13200	30- - 1
	231- - 1
	238- - 2
25260-16500	231- - 1
25260-24100	231- - 1
25265-10600	30- - 1
25265-13200	30- - 1
	231- - 1
25265-24100	238- - 2
25310-09500	30- - 2
	231- - 2
25310-11400	30- - 2
	231- - 1
25310-14600	231- - 1
25312-55100	30- - 2
	231- - 2
25319-11400	30- - 2

Printed in Japan

PART NO.	PAGE
	231- - 2
25320-02700	64- - 2
	275- - 3
25330-10600	30- - 2
	231- - 2
25330-13200	30- - 2
25335-10600	30- - 2
	231- - 2
25340-13200	232- - 1
25360-01300	30- - 2
	231- - 2
25405-34200	29- - 3
25410-10601	31- - 1
25410-10801	31- - 1
	231- - 3
25410-10802	31- - 1
	231- - 3
25410-13200	31- - 1
	231- - 2
25410-16500	231- - 2
25410-18400	231- - 2
25410-18401	231- - 3
25410-18402	231- - 3
25461-89901	231- - 3
	231- - 3
25462-50000	31- - 1
	231- - 3
25462-89901	231- - 3
25463-50000	31- - 1
	231- - 3
25463-89901	231- - 3
25467-30800	31- - 1
	31- - 1
	231- - 3
	231- - 3
25468-58300	29- - 3
	31- - 1
	231- - 3
25475-89901	231- - 3
25516-10601	30- - 2
	231- - 2
25517-09400	30- - 2
	231- - 2
25520-13200	31- - 1
	231- - 4
25520-33500	31- - 1
	231- - 4
25520-89900	231- - 4
25520-89901	231- - 4
25520-89910	231- - 4
25540-10600	30- - 2
	231- - 2

Printed in Japan

PART NO.	PAGE
25540-10800	30- - 2
	231- - 2
25595-24000	231- - 4
25596-24000	231- - 4
25599-24000	231- - 4
26006-14001	240- - 1
26010-10600	38- - 1
26010-10601	38- - 1
26010-10603	38- - 1
26010-10800	38- - 1
26010-10801	38- - 1
26010-10803	38- - 1
26010-13900	38- - 1
26010-13901	38- - 1
	240- - 1
26010-13903	240- - 1
	240- - 1
26010-14000	38- - 1
26010-14001	38- - 1
	240- - 1
26010-14003	240- - 1
26011-58001	38- - 2
	240- - 1
26012-58001	38- - 2
	240- - 1
26012-58501	38- - 2
	240- - 1
26016-36700	38- - 2
	240- - 1
26016-71201	240- - 2
26017-36700	38- - 2
	240- - 1
26017-71201	240- - 2
26018-36700	38- - 2
	240- - 2
26018-71201	240- - 2
26019-36700	38- - 2
	240- - 2
26019-71201	240- - 2
26022-01301	240- - 2
26022-04100	38- - 3
	240- - 2
26022-58000	38- - 2
	240- - 2
26023-14000	38- - 2
	240- - 2
26023-32200	38- - 2
26024-14000	38- - 2
	240- - 2
26024-58000	38- - 2
	240- - 2
26024-71201	240- - 2

Printed in Japan

PART NO.	PAGE
26025-58000	38- - 2
26031-10600	38- - 2
	240- - 2
26056-14001	240- - 1
26060-10600	38- - 1
26060-10601	38- - 1
26060-10603	38- - 1
26060-10800	38- - 2
26060-10801	38- - 2
26060-10803	38- - 2
26060-13900	38- - 2
26060-13901	38- - 2
	240- - 1
26060-13903	240- - 1
26060-14000	38- - 1
26060-14001	38- - 1
	240- - 1
26120-10600	39- - 1
	241- - 1
26120-10602	241- - 1
26120-10800	39- - 1
	241- - 1
26120-10801	39- - 1
26120-18700	241- - 1
26121-10600	39- - 1
	241- - 1
26121-10800	39- - 1
	241- - 2
	241- - 2
26121-10801	39- - 1
	241- - 1
26123-10600	39- - 1
	241- - 2
26123-10800	39- - 1
	241- - 2
26125-10600	39- - 1
	241- - 1
26125-10602	241- - 1
26125-10800	39- - 1
	241- - 1
26125-10801	39- - 1
	241- - 1
26125-18700	241- - 1
26126-10600	39- - 1
	241- - 2
26126-10800	39- - 1
	241- - 2
	241- - 2
26126-10801	39- - 1
	241- - 2
26127-04100	39- - 2
26128-10600	39- - 2

Printed in Japan

PART NO.	PAGE
	241- - 2
26128-10600	39- - 2
	241- - 2
26130-18700	241- - 1
26135-18700	241- - 1
26143-10600	39- - 2
	241- - 2
26143-10600	39- - 2
	241- - 2
26144-10600	39- - 2
	241- - 3
26150-11400	244- - 1
26151-11400	41- - 1
	244- - 1
26152-30800	244- - 1
26153-36700	244- - 1
26156-11400	244- - 1
26157-11400	244- - 1
26158-11400	244- - 1
26160-10600	245- - 1
26163-10600	245- - 1
26181-10600	245- - 1
26181-18700	241- - 2
26186-18700	241- - 2
26189-10600	245- - 1
26230-30100	41- - 1

PART NO.	PAGE
	244- - 1
26231-01300	244- - 1
26231-02700	244- - 1
26232-30000	244- - 1
26233-02700	244- - 1
26234-02700	244- - 1
26260-13200	38- - 3
	239- - 2
	240- - 3
26260-30100	29- - 2
	29- - 2
26261-10600	37- - 2
	239- - 2
26261-30100	37- - 2
	239- - 2
26310-10601	31- - 2
26320-58000	31- - 2
26320-59900	231- - 5
26330-10601	31- - 2
26340-10602	35- - 1
26340-13200	35- - 1
26340-16500	235- - 1
26340-16501	235- - 1
26344-10601	235- - 1
26344-13200	235- - 1
26345-10601	35- - 1

Printed in Japan

PART NO.	PAGE
26347-10601	35- - 1
	235- - 1
26348-10601	35- - 1
	235- - 1
26348-13200	235- - 1
26350-10601	35- - 1
26350-13200	35- - 1
26350-16500	235- - 2
26350-16501	235- - 2
26351-10602	35- - 1
26351-16500	235- - 1
26353-10600	35- - 1
	235- - 1
26360-10600	35- - 2
26360-13200	35- - 2
	235- - 2
26360-89910	235- - 3
26362-10600	35- - 2
26362-13200	35- - 2
	235- - 2
26364-13200	235- - 3
26365-10600	35- - 2
26365-13200	35- - 2
	235- - 2
26371-10601	35- - 1
	235- - 1
26371-24000	235- - 1
26372-10601	35- - 1
	235- - 1
26372-24000	235- - 1
26373-10601	35- - 1
	235- - 1
26375-89910	235- - 3
26380-24010	235- - 2
26385-24010	235- - 2
26410-11401	42- - 1
26410-16600	245- - 1
26411-10600	42- - 1
26411-16500	245- - 1
26414-11401	42- - 1
26510-10600	43- - 1
26510-13200	43- - 1
	246- - 1
26510-18400	246- - 1
26511-10600	43- - 1
26511-13200	43- - 1
	246- - 1
26511-18400	246- - 1
26512-10600	43- - 1
	246- - 1
26512-18400	246- - 1
26513-10600	43- - 1

Printed in Japan

PART NO.	PAGE	PART NO.	PAGE
26513-13200	43- - 1	26533-10600	40- - 1
	246- - 1		242- - 2
26513-18400	246- - 1		242- - 3
26517-10600	43- - 1	26534-10600	40- - 2
	246- - 1		242- - 2
26518-10600	43- - 1		242- - 3
26518-13200	43- - 1	26540-11400	41- - 1
	246- - 1	26540-11401	41- - 1
26518-18400	246- - 1		244- - 1
26521-10600	40- - 1	26550-10600	40- - 1
	242- - 1		242- - 1
	242- - 2	26550-10800	40- - 1
26521-10601	242- - 1		242- - 1
	242- - 2	26550-10802-01	242- - 1
26521-10800	40- - 1	26550-18400	243- - 1
	242- - 1	26550-19100	243- - 1
26521-10802	242- - 1	26550-19101	243- - 1
26523-10600	40- - 1	26550-19600	243- - 1
	242- - 2	26550-19800	243- - 1
	242- - 3	26550-19802	243- - 2
26524-10600	40- - 1	26550-19805	243- - 2
	242- - 2	26551-18400	243- - 2
	242- - 3	26551-19100	243- - 2
26531-10600	40- - 1	26551-19101	243- - 2
	242- - 1	26551-19802	243- - 3
26531-10601	242- - 1	26552-18400	243- - 3

Printed in Japan

PART NO.	PAGE
26552-18410	243- - 3
26553-10600	40- - 1
	242- - 2
	242- - 2
26553-18400	243- - 3
26553-18410	243- - 3
26553-19600	243- - 3
26555-10600	40- - 1
	242- - 1
26555-10800	40- - 1
	242- - 1
26555-10802-01	242- - 1
26555-18400	243- - 1
26555-19100	243- - 1
26555-19101	243- - 1
26555-19600	243- - 1
26555-19800	243- - 2
26555-19802	243- - 2
26555-19805	243- - 2
26556-18400	243- - 2
26556-19100	243- - 3
26556-19101	243- - 3
26556-19802	243- - 3
26558-10600	40- - 1
	242- - 2
	242- - 2

PART NO.	PAGE
26558-18400	243- - 3
26558-18410	243- - 3
26558-19600	243- - 3
26560-19701	243- - 2
26561-18400	243- - 4
26561-19100	243- - 4
	243- - 4
26565-19701	243- - 2
26713-34200	244- - 1
26715-04200	39- - 2
	40- - 1
	241- - 2
	242- - 2
	242- - 2
	243- - 3
26716-07300	40- - 1
	41- - 1
	241- - 3
	242- - 2
	242- - 3
	243- - 4
	244- - 1
26717-04200	43- - 1
	246- - 1
	246- - 2
26717-10600	245- - 1

Printed in Japan

PART NO.	PAGE
26718-10600	42- - 1
	245- - 1
26740-89902	244- - 1
26745-89900	244- - 1
27010-10800	32- - 1
27010-11400	32- - 1
27010-13300	32- - 1
27010-13600	32- - 1
27010-16500	232- - 1
27010-17001	232- - 1
27010-18400	232- - 1
27010-18500	232- - 1
27010-18801	232- - 1
27012-13600	232- - 1
27015-11400	232- - 1
27040-10600	79- - 3
	290- - 3
27041-10600	79- - 3
	290- - 3
27041-18800	232- - 3
27042-18800	232- - 3
27042-73000	232- - 2
27045-18400	232- - 2
27060-11400	232- - 2
27061-11400	232- - 3
27061-14800	232- - 2
27061-18800	232- - 3
27061-18801	232- - 3
27062-18800	232- - 3
27062-18801	232- - 3
27063-18800	232- - 3
27063-18801	232- - 3
27064-18800	232- - 3
27064-18801	232- - 3
27065-72800	209- - 2
	222- - 3
27066-16800	232- - 2
27066-17000	232- - 2
27066-18400	232- - 2
27066-32300	232- - 2
27067-10800	232- - 2
27067-11400	232- - 2
27068-72600	232- - 3
27070-11400	232- - 2
27075-32600	209- - 2
	222- - 3
27076-33300	232- - 3
27086-00100	232- - 2
	232- - 3
	232- - 3
	232- - 3
27135-10600	79- - 6

Printed in Japan

PART NO.	PAGE
	.....290- - 7
27145-10600.....	79- - 7
	.....290- - 7
27155-10600.....	79- - 7
	.....290- - 7
27156-10600.....	79- - 7
	.....290- - 7
27167-10601.....	76- - 4
27167-10602.....	76- - 4
	.....287- - 4
27186-14300.....	232- - 1
27310-10801.....	33- - 1
27310-11401.....	33- - 1
27310-11402.....	33- - 1
27310-16600.....	233- - 1
27312-11400.....	33- - 1
27350-13601.....	233- - 1
27363-04100.....	76- - 4
	.....287- - 4
27380-11400.....	33- - 1
27380-13600.....	33- - 1
27380-16600.....	233- - 1
27400-10621.....	36- - 1
27400-10622.....	36- - 1
27400-10801.....	36- - 1
27400-10802.....	36- - 1
27400-11600.....	36- - 1
27400-11601.....	36- - 1
27400-13650.....	236- - 1
27400-13900.....	36- - 1
27400-13950.....	236- - 1
27400-14500.....	36- - 1
27400-15800.....	236- - 1
27400-15810.....	236- - 1
27400-15811.....	237- - 1
27400-16510.....	236- - 1
27400-17010.....	236- - 1
27400-18700.....	237- - 1
27400-18701.....	238- - 1
27400-24100.....	238- - 1
27400-24101.....	238- - 1
27410-10801.....	36- - 1
27410-11401.....	36- - 1
	.....236- - 1
27410-89900.....	236- - 1
27414-10600.....	36- - 2
	.....236- - 3
27415-14800.....	236- - 1
	.....237- - 1
27415-15800.....	236- - 1
27416-10600.....	36- - 2
	.....236- - 3

Printed in Japan

PART NO.	PAGE
27416-32800	36- - 2
27416-89900	236- - 3
	237- - 1
	238- - 1
27417-10600	36- - 2
27417-10601	36- - 2
	236- - 2
27417-10620	36- - 2
27418-10600	36- - 2
27418-10601	36- - 2
	236- - 2
27419-10600	36- - 2
	236- - 3
27428-10600	36- - 3
27428-10601	36- - 3
	236- - 3
27428-14800	236- - 3
	237- - 1
	238- - 1
27430-10600	36- - 1
27430-10602	36- - 2
27430-13600	36- - 2
	236- - 2
27430-89950	236- - 2
	237- - 1
27436-10600	36- - 2
	236- - 2
27440-10600	36- - 2
	236- - 2
	237- - 1
	238- - 1
27440-35210	36- - 2
27442-11400	36- - 2
	236- - 2
27442-89900	236- - 2
	237- - 1
27445-10800	36- - 1
27445-10801	36- - 1
	236- - 1
27445-11400	36- - 1
27445-11401	36- - 1
	236- - 1
27446-15800	236- - 1
27446-19000	237- - 1
27446-24100	238- - 1
27446-89900	237- - 1
	238- - 1
27449-10800	236- - 1
27460-89904	236- - 3
	237- - 1
27460-89913	236- - 3
27460-89920	238- - 1

Printed in Japan

PART NO.	PAGE
27460-89940	238- - 1
27460-89946	238- - 1
27460-89980	238- - 1
27460-89981	236- - 3
	237- - 1
27461-89905	236- - 2
	237- - 1
27461-89931	236- - 2
27461-89945	236- - 2
	237- - 1
27470-89900	238- - 1
27480-89900	238- - 1
28726-10600	35- - 1
	235- - 1
28727-10600	35- - 1
	235- - 1
28728-10600	35- - 1
	235- - 2
28810-10601	35- - 1
	235- - 2
28815-10600	35- - 2
	235- - 2
28817-10600	35- - 1
	235- - 2
28820-10600	35- - 2
	235- - 2
28821-10600	35- - 2
	235- - 2
28822-10600	35- - 2
	235- - 2
28831-10600	235- - 2
28832-10600	235- - 2
28845-10600	35- - 2
	235- - 2
28846-10600	35- - 2
	235- - 2
28847-10600	35- - 2
	235- - 2
28848-10600	35- - 2
	235- - 2
28850-10600	35- - 2
	235- - 2

Printed in Japan

PART NO.	PAGE
30000	
30000-09524	45- - 1
30010-09523	45- - 1
30011-09520	45- - 2
30100-09400	49- - 1
30100-09402	49- - 1
30100-09403	49- - 1
30100-09404	49- - 1
30100-09522	45- - 3
30100-09523	45- - 3
30100-10600	49- - 1
30100-10601	49- - 1
	247- - 1
30100-14600	248- - 1
30100-14800	247- - 1
30100-15800	248- - 1
30209-04400	49- - 1
30209-09520	45- - 3
30209-10600	49- - 1
30209-10601	49- - 1
	247- - 1
30210-09520	45- - 3
30210-09600	49- - 1
30210-10600	49- - 1
30210-10601	49- - 1
	247- - 1
30210-14600	248- - 1
30210-24000	247- - 1
30213-04401	49- - 1
30213-09520	45- - 3
30213-10600	49- - 1
	247- - 1
30214-09520	45- - 3
30214-09600	49- - 2
30214-10602	49- - 2
	247- - 1
30215-04400	49- - 2
30215-09520	45- - 3
30215-10600	49- - 1
	247- - 1
30217-09520	45- - 4
30218-09520	45- - 2
	45- - 4
30218-35720	45- - 2
30219-09520	45- - 3
30221-08000	49- - 2
30221-09520	45- - 3
30221-10600	49- - 2
	247- - 1
30221-10602	247- - 1
30221-24000	247- - 1

Printed in Japan

PART NO.	PAGE
30222-08000	49- - 2
30222-09520	45- - 4
30224-04100	49- - 2
30224-09520	45- - 3
30224-10600	49- - 2
	247- - 1
30224-10601	247- - 1
30225-09520	45- - 3
30225-35720	49- - 2
	247- - 1
30229-09520	45- - 3
30229-10600	49- - 2
	247- - 2
30230-04100	49- - 2
30231-04400	49- - 2
30231-09520	45- - 4
30231-10600	49- - 2
	247- - 2
30238-04100	49- - 2
30239-09520	45- - 3
30239-10600	49- - 2
	247- - 2
30239-10601	247- - 2
30239-10602	247- - 2
30247-09520	45- - 3
30251-35720	49- - 2

PART NO.	PAGE
	247- - 2
30310-09522	45- - 1
30331-09520	45- - 2
30332-09520	45- - 2
30333-09520	45- - 2
30334-09520	45- - 2
30335-09520	45- - 2
30336-09520	45- - 2
30340-09520	45- - 2
30351-09520	45- - 1
30352-09520	45- - 1
30353-09520	45- - 1
30354-09520	45- - 1
30355-09520	45- - 1
30356-09520	45- - 2
30357-09520	45- - 1
30361-09520	45- - 1
30362-09520	45- - 1
30363-09520	45- - 3
30364-09520	45- - 3
30365-09520	45- - 1
30366-09520	45- - 1
30371-09520	45- - 2
30372-09520	45- - 3
30375-09520	45- - 2
30381-09520	45- - 2

Printed in Japan

PART NO.	PAGE
30382-09520	45- - 2
30391-09520	45- - 2
30392-09520	45- - 2
30410-08000	2- - 3
	202- - 3
30411-38701	203- - 3
30411-71801	203- - 3
30411-78200	203- - 3
30411-78201	203- - 3
30412-30000	2- - 3
	202- - 3
30412-85060	203- - 2
30501-10602	49- - 3
	247- - 3
30501-14601	248- - 1
30501-14800	247- - 3
30502-08000	49- - 3
30502-13200	247- - 3
30502-14600	248- - 1
30502-14800	247- - 3
30502-32200	49- - 3
	247- - 3
30510-09521	45- - 4
30514-08000	49- - 3
	247- - 3
30514-09521	45- - 4
30514-09530	45- - 4
30514-11700	45- - 4
30514-14600	247- - 3
	248- - 1
30526-30000	2- - 3
	202- - 3
30527-30000	2- - 3
	202- - 3
30528-30000	2- - 3
	202- - 4
30529-30000	202- - 4
30530-10600	49- - 3
	247- - 2
30530-10601	247- - 2
30530-11700	45- - 4
30531-14602	247- - 2
	248- - 1
30532-04100	45- - 4
	49- - 3
	247- - 2
30532-30100	46- - 1
30533-10600	45- - 4
30533-16500	248- - 1
30534-14601	247- - 2
	248- - 1
30534-14602	248- - 1

Printed in Japan

PART NO.	PAGE
30537-04100	45- - 4
	49- - 3
	247- - 2
30537-15800	247- - 2
	248- - 1
30541-04100	45- - 4
30541-08000	49- - 3
	247- - 2
30542-10600	45- - 4
	49- - 3
	247- - 3
30542-14601	247- - 3
	248- - 1
30542-30000	49- - 3
30543-01301	52- - 1
	255- - 1
30543-13200	252- - 3
	256- - 4
30545-30000	2- - 3
	202- - 4
30547-14600	247- - 3
	248- - 1
30547-32201	45- - 4
	49- - 3
	247- - 3
30547-78000	248- - 1
30548-32201	45- - 4
	49- - 3
	247- - 3
30610-10600	44- - 2
30610-10601	44- - 2
	250- - 2
30610-10625	250- - 4
30610-10626	250- - 4
30610-10627	250- - 4
30610-10628	250- - 4
30610-15800	250- - 2
30610-30500	47- - 1
30611-27260	44- - 3
	47- - 2
	250- - 3
30612-27260	44- - 3
	47- - 2
	250- - 3
30613-27260	44- - 3
	47- - 2
	250- - 3
30614-01300	61- - 3
	271- - 4
30620-08025	249- - 2
30620-10600	41- - 1
	249- - 1

Printed in Japan

PART NO.	PAGE	PART NO.	PAGE
30620-10625	249- - 1	30726-09520	46- - 3
30620-10626	249- - 1	30727-09520	46- - 1
30620-10627	249- - 2	30729-09520	46- - 1
30620-10628	249- - 2	30730-09520	46- - 2
30620-15800	249- - 1	30731-11700	46- - 2
30620-15826	249- - 2	30732-11700	46- - 3
30622-30001	249- - 1	30734-11700	46- - 3
30622-36900	41- - 1	30735-09520	46- - 3
	249- - 1	30737-09521	46- - 3
30624-30001	249- - 1	30738-09520	46- - 2
30624-30002	41- - 1	30739-09521	46- - 3
	249- - 1	30740-11700	46- - 2
30625-27260	249- - 1	30743-09520	46- - 3
30626-30001	249- - 1	30745-09520	46- - 3
30627-10610	249- - 1	30745-11700	46- - 3
30627-32200	41- - 1	30754-11700	46- - 3
	249- - 1	30755-09520	46- - 3
30628-10600	41- - 1	30758-11700	46- - 3
	249- - 1	31000-24550	262- - 1
30628-10610	249- - 1	31100-20200	262- - 1
30710-09520	46- - 1	31390-24500	262- - 3
30711-11700	46- - 1	31392-20200	262- - 3
30712-11700	46- - 2	31913-24500	270- - 2
30713-11700	46- - 2	32010-10652	50- - 1
30715-09521	46- - 1	32010-10653	50- - 1
30720-11700	46- - 1	32010-10851	50- - 1

Printed in Japan

PART NO.	PAGE
32010-10852	50- - 1
32010-11751	50- - 1
32010-12150	50- - 1
32010-12151	50- - 1
32010-12450	50- - 1
32010-12451	50- - 2
32010-12452	50- - 2
	251- - 1
32010-12453	50- - 2
	251- - 1
32010-13250	50- - 1
32010-13851	251- - 1
32010-13950	50- - 1
32010-15852	251- - 1
32010-16530	251- - 1
32010-16531	251- - 1
32010-16750	251- - 1
32010-17050	251- - 1
32011-09400	2- - 3
32012-04100	51- - 2
	52- - 2
	252- - 2
	255- - 2
32021-35000	83- - 4
	91- - 4
	302- - 8
32100-16510	256- - 1
32100-19100	256- - 1
32101-09602	52- - 1
	255- - 1
32101-10601	51- - 1
	252- - 1
32101-10801	51- - 1
	252- - 1
32101-10931	299- - 1
32101-14601	256- - 1
32103-04100	52- - 1
	255- - 1
32103-14600	252- - 2
	256- - 3
32103-36900	51- - 1
	252- - 2
32110-14601	256- - 1
32111-09600	52- - 1
	255- - 1
32111-10601	51- - 2
32111-11700	51- - 2
32111-13200	51- - 2
	252- - 2
32111-14100	51- - 2
32112-10600	51- - 2
	252- - 2

Printed in Japan

PART NO.	PAGE
32112-14600	256- - 1
32112-16500	252- - 2
32112-30800	52- - 1
	255- - 1
32113-13200	51- - 2
	252- - 2
32113-14601	256- - 1
32114-00100	52- - 2
	255- - 2
32114-30000	202- - 4
32120-00100	256- - 4
32120-09400	54- - 4
	256- - 5
	257- - 4
32120-10600	53- - 5
	253- - 4
32120-12600	256- - 4
	256- - 5
32120-16500	253- - 4
32124-26760	53- - 5
	54- - 5
	257- - 5
32128-07200	53- - 5
	54- - 4
	253- - 4
	257- - 4
32130-08000	52- - 1
	255- - 1
32130-10600	51- - 1
32130-13200	51- - 1
	252- - 1
32130-16500	252- - 1
32130-16510	256- - 1
32130-18800	256- - 1
32132-07200	51- - 1
	52- - 1
	255- - 1
32132-13200	51- - 1
	252- - 1
32132-14601	256- - 2
32132-16500	252- - 1
32133-14600	256- - 2
32134-01300	52- - 1
	255- - 1
32134-10600	51- - 1
	252- - 1
32134-14600	256- - 2
32134-16500	252- - 1
32135-08001	52- - 1
	255- - 1
32136-07200	51- - 1
	52- - 1

Printed in Japan

PART NO.	PAGE
	252- - 1
	255- - 1
	256- - 1
32137-08000	52- - 1
	255- - 1
32138-08000	52- - 1
	255- - 1
32138-14600	256- - 2
32141-14600	259- - 6
32142-26760	54- - 4
	257- - 4
	258- - 7
	259- - 7
32150-01300	52- - 1
	255- - 1
32160-09600	56- - 1
32161-10600	51- - 1
	252- - 1
32161-14600	256- - 2
32161-16500	252- - 1
32161-16501	252- - 1
32161-16502	252- - 2
32161-73200	256- - 2
32162-09600	56- - 1
	260- - 1
32162-10600	51- - 1

PART NO.	PAGE
	252- - 2
32162-14600	256- - 2
32162-16501	252- - 2
32165-09600	56- - 2
	260- - 2
32167-03200	56- - 2
	260- - 2
32168-03200	56- - 2
	260- - 2
32169-12400	52- - 2
	255- - 2
32200-16511	258- - 3
32201-09601	54- - 2
	257- - 2
32201-10600	53- - 2
32201-11700	53- - 2
32201-12400	54- - 2
	257- - 2
32201-12401	54- - 2
	257- - 2
32201-13200	53- - 2
	253- - 2
32201-14100	53- - 2
32202-09500	3- - 2
	204- - 3
32202-09520	3- - 2

Printed in Japan

PART NO.	PAGE
32202-14600	259- - 2
32202-15800	259- - 2
32202-16700	259- - 2
32202-30000	3- - 2
	204- - 3
32203-10600	53- - 2
	253- - 2
32203-26760	54- - 2
	257- - 2
32204-08000	258- - 3
	259- - 3
32204-08001	53- - 2
	54- - 2
	253- - 2
	257- - 2
	258- - 3
	259- - 3
32204-08002	53- - 2
	54- - 2
	253- - 2
	257- - 2
	258- - 3
	259- - 3
32204-08003	53- - 2
	54- - 2
	253- - 2
	257- - 2
	258- - 3
	259- - 3
32204-08004	53- - 2
	54- - 2
	253- - 2
	257- - 2
	258- - 3
	259- - 3
32205-08002	53- - 2
	54- - 2
	253- - 2
	257- - 2
32205-14601	258- - 3
	259- - 3
32208-14600	256- - 3
32211-07200	54- - 1
	257- - 1
32211-10600	53- - 1
	253- - 1
32211-14600	258- - 2
	259- - 2
32211-27161	54- - 1
	257- - 1
32213-10601	53- - 1
32213-12200	54- - 1

Printed in Japan

PART NO.	PAGE
	.....257- - 1
32213-12201	..... 54- - 1
	.....257- - 1
32213-13200	..... 53- - 1
	.....253- - 1
32213-15800	.....258- - 2
	.....259- - 1
32213-27160	..... 54- - 1
	.....257- - 1
32213-32200	..... 54- - 1
	.....257- - 1
32214-10600	..... 53- - 1
	.....253- - 1
32214-26760	..... 54- - 1
	.....257- - 1
32218-14600	.....258- - 2
	.....259- - 2
32218-26760	..... 54- - 1
	.....257- - 1
32219-10600	..... 53- - 1
	.....253- - 1
	.....259- - 2
32219-26760	..... 54- - 1
	.....257- - 1
32219-73200	.....253- - 1
	.....258- - 2
32224-10600	..... 53- - 1
	.....253- - 1
32224-14600	.....258- - 2
	.....259- - 2
32224-26760	..... 54- - 2
	.....257- - 2
32225-10600	..... 53- - 1
	.....253- - 1
32225-14600	.....258- - 2
	.....259- - 2
32225-14601	.....258- - 2
	.....259- - 2
32225-14602	.....258- - 2
	.....259- - 2
32225-14603	.....258- - 3
	.....259- - 2
32225-14604	.....258- - 3
	.....259- - 2
32225-18400	.....253- - 1
32226-10600	..... 53- - 1
	.....253- - 2
32226-18400	.....253- - 2
32226-26760	..... 54- - 2
	.....257- - 2
32227-10600	..... 53- - 1
	.....253- - 2

Printed in Japan

PART NO.	PAGE
32227-18400	253- - 2
32227-26760	54- - 2
	257- - 2
32228-10600	53- - 1
	253- - 2
32228-18400	253- - 2
32228-26760	54- - 2
	257- - 2
32229-10600	53- - 2
	253- - 2
32229-18400	253- - 2
32229-26760	54- - 2
	257- - 2
32230-73201	258- - 4
32232-14600	259- - 4
32234-36900	53- - 3
	253- - 3
32241-07200	54- - 2
	257- - 2
32241-10600	53- - 2
32241-13200	53- - 2
	253- - 2
32241-15800	258- - 4
	259- - 3
32241-16500	253- - 2
32243-07200	54- - 3
	257- - 3
32243-10601	53- - 3
32243-13200	53- - 3
	253- - 3
32243-16500	253- - 3
32243-26760	54- - 3
	257- - 3
32245-14600	258- - 6
	259- - 6
32246-08000	53- - 3
32246-14600	258- - 4
	259- - 4
32246-26760	54- - 3
	257- - 3
32246-32200	54- - 3
	257- - 3
32247-26760	53- - 4
	54- - 3
	257- - 3
32248-26760	53- - 4
	54- - 4
	257- - 4
32250-16510	258- - 5
32251-07200	54- - 3
	257- - 3
32251-08000	53- - 3

Printed in Japan

PART NO.	PAGE
32251-10600	53- - 3
32251-13200	53- - 3
	253- - 3
32251-26761	54- - 3
	257- - 3
32252-14600	259- - 5
32252-26761	53- - 3
	54- - 3
	257- - 3
32253-14600	258- - 4
	259- - 4
32253-26760	54- - 3
	257- - 3
32253-26761	53- - 3
32258-14600	258- - 7
	259- - 6
32260-16510	258- - 5
32261-09600	54- - 3
	257- - 3
32261-13200	53- - 3
	253- - 3
32261-26761	53- - 3
32261-27161	54- - 3
	257- - 3
32262-14600	259- - 5
32262-26761	53- - 3
	54- - 3
	257- - 3
32263-14600	258- - 6
	259- - 6
32263-14601	258- - 6
	259- - 6
32263-14602	258- - 6
	259- - 6
32263-14603	258- - 6
	259- - 6
32263-14604	258- - 6
	259- - 6
32263-36900	53- - 5
	253- - 4
32264-09400	53- - 3
32264-14600	258- - 4
	258- - 5
	258- - 5
	259- - 4
	259- - 4
	259- - 5
32264-26761	54- - 3
	257- - 3
32265-09400	53- - 4
32265-26761	54- - 3
	257- - 3

Printed in Japan

PART NO.	PAGE
32266-09400	53- - 4
32266-26761	54- - 3
	257- - 3
32267-09400	53- - 4
32268-09400	53- - 4
32272-14600	258- - 6
	259- - 6
32272-26760	54- - 4
	257- - 4
32272-36900	53- - 5
	253- - 4
32273-26760	54- - 4
	257- - 4
32273-36900	53- - 5
	253- - 4
	258- - 6
	259- - 6
32274-10600	53- - 5
	253- - 4
32274-36900	258- - 6
	259- - 6
32277-09400	53- - 3
32280-10601	53- - 1
	253- - 1
32280-13200	253- - 1
32280-27160	54- - 1
	257- - 1
	258- - 1
32281-09500	54- - 1
	257- - 1
32281-10600	53- - 1
	253- - 1
32281-14601	258- - 1
	259- - 1
32281-27160	54- - 1
	257- - 1
32282-14600	258- - 1
	259- - 1
32283-00100	54- - 1
	257- - 1
32283-10600	53- - 1
	253- - 1
32283-13200	253- - 1
32283-14601	256- - 1
	258- - 1
	259- - 1
32284-14600	258- - 1
	259- - 1
32285-14600	258- - 1
	259- - 1
32285-14601	258- - 1
	259- - 1

Printed in Japan

PART NO.	PAGE
32285-14602	258- - 1
	259- - 1
32285-14603	258- - 1
	259- - 1
32285-14604	258- - 2
	259- - 1
32287-14600	258- - 2
32287-14601	259- - 1
32290-10600	53- - 1
	54- - 1
	253- - 1
	257- - 1
32291-09500	54- - 1
	257- - 1
32291-10600	53- - 1
	253- - 1
32292-14600	261- - 2
	261- - 2
32292-36900	55- - 1
	254- - 1
32523-30000	66- - 2
	277- - 2
32601-02700	54- - 2
	257- - 2
32601-13200	53- - 2
	253- - 3
32601-14600	259- - 4
32601-16500	253- - 3
32601-73200	258- - 4
32602-26760	53- - 2
	53- - 4
	54- - 2
	54- - 4
	257- - 2
	257- - 4
32602-32200	53- - 2
	253- - 3
32603-26760	53- - 2
	53- - 4
	54- - 3
	54- - 4
	257- - 3
	257- - 4
32603-36900	53- - 4
	253- - 3
32603-73200	258- - 4
	258- - 5
32604-02701	54- - 3
	257- - 3
32604-08003	53- - 3
32604-14810	258- - 4
	258- - 5

Printed in Japan

PART NO.	PAGE
32604-61000	53- - 3
	53- - 4
	253- - 3
	253- - 3
32605-02700	53- - 4
	54- - 4
	257- - 4
32605-13200	53- - 4
	253- - 3
32605-14600	259- - 5
32605-16500	253- - 3
32605-73200	258- - 5
32605-73201	258- - 5
32606-02700	53- - 4
	54- - 4
	257- - 4
32606-10600	53- - 4
	54- - 4
	257- - 4
32606-13200	53- - 4
	253- - 3
32606-14600	259- - 4
	259- - 6
32606-61000	253- - 3
32606-73200	258- - 5
	258- - 6
32607-02701	53- - 4
	54- - 4
	257- - 4
32607-10600	53- - 4
	54- - 4
	257- - 4
32608-36700	53- - 3
32608-36900	253- - 3
32609-36900	53- - 5
	253- - 3
32609-73200	258- - 4
	258- - 5
32611-14600	259- - 2
	259- - 4
	259- - 5
	259- - 5
32612-14601	259- - 3
	259- - 5
	259- - 5
32613-14601	259- - 3
	259- - 5
	259- - 5
32614-14600	259- - 3
	259- - 4
	259- - 5
32615-14600	259- - 4

Printed in Japan

PART NO.	PAGE
32616-14600	259- - 3
	259- - 4
	259- - 5
	259- - 5
32617-14601	259- - 4
32618-14601	259- - 4
32701-07200	54- - 4
	257- - 4
32701-10400	54- - 4
	257- - 4
32701-10600	53- - 5
32701-10800	53- - 5
	253- - 4
32701-15800	258- - 7
	259- - 6
32701-73700	263- - 7
32703-04100	54- - 5
	257- - 5
32703-07400	54- - 5
	257- - 5
32703-10800	53- - 5
32703-14615	253- - 4
	256- - 3
32703-14815	256- - 3
32703-14816	256- - 3
32703-14915	256- - 3
32703-16500	253- - 4
32703-16515	256- - 3
32703-37000	53- - 5
32703-73701	262- - 3
32706-26760	52- - 1
	229- - 1
	255- - 1
32707-04100	52- - 2
	255- - 2
32707-14600	256- - 4
32707-18400	253- - 5
32707-32200	229- - 1
32707-36900	53- - 6
	253- - 5
32708-10600	53- - 5
	253- - 4
32708-10601	53- - 5
	253- - 4
32708-10602	53- - 5
	253- - 4
32708-10603	53- - 5
	253- - 4
32709-04100	52- - 2
	253- - 5
	255- - 2
32709-14600	253- - 5

Printed in Japan

PART NO.	PAGE
32710-04100	52- - 2
	255- - 2
32710-14600	256- - 4
32712-36900	53- - 6
32712-61000	53- - 6
	253- - 5
	261- - 2
32717-04100	52- - 2
	255- - 2
32718-04103	52- - 2
	255- - 2
32718-14600	256- - 4
32720-14600	258- - 4
	258- - 7
	259- - 3
32730-71802	256- - 4
32801-09600	56- - 1
	260- - 1
32801-10600	55- - 1
	254- - 1
32801-14600	261- - 1
32801-16510	261- - 1
32801-16511	261- - 1
32803-03200	56- - 2
	260- - 2
32804-85060	56- - 2
	260- - 2
32805-09600	56- - 1
	260- - 1
32805-10600	55- - 1
32805-13200	55- - 1
	254- - 1
32805-14600	261- - 1
32809-09600	56- - 1
	260- - 1
32809-10600	55- - 1
	254- - 1
32809-14600	261- - 1
32809-16510	261- - 1
32809-16511	261- - 1
32811-03200	56- - 1
	260- - 1
32811-10600	55- - 1
32811-13200	55- - 1
	254- - 1
32811-14600	261- - 2
32813-09600	56- - 2
	260- - 1
32815-36900	55- - 1
	254- - 1
	256- - 3
32816-09600	56- - 1

Printed in Japan

PART NO.	PAGE
	260- - 1
32816-14600	261- - 2
32816-36900	51- - 2
	252- - 3
32819-09600	56- - 1
	260- - 1
32819-14600	261- - 2
32823-09600	56- - 1
	260- - 1
32823-14600	261- - 2
32824-09600	56- - 1
	260- - 1
	261- - 2
32825-14600	261- - 2
32825-26761	56- - 2
	260- - 2
32826-03200	56- - 2
	260- - 2
32827-26760	56- - 2
	56- - 2
	260- - 2
	260- - 2
	261- - 2
32829-26760	55- - 1
	56- - 2
	254- - 1
	256- - 3
	260- - 2
32830-03200	56- - 2
	260- - 2
32831-00100	55- - 1
	254- - 1
	256- - 3
32832-14600	256- - 3
32833-14600	256- - 3
32834-14600	256- - 3
32835-14600	256- - 3
32836-14600	256- - 3
32841-12401	56- - 3
	260- - 2
32841-15851	261- - 3
32843-14650	261- - 2
32843-15850	261- - 2
32844-14600	261- - 1
32844-18800	261- - 1
32845-18800	261- - 3
32849-09600	56- - 1
	260- - 1
32849-14600	261- - 2
32850-03200	56- - 3
	260- - 3
32851-09600	56- - 3

Printed in Japan

PART NO.	PAGE
	260- - 3
32851-14600	261- - 3
32852-09600	56- - 3
	260- - 3
32852-14600	261- - 1
32853-03200	56- - 3
	260- - 3
32853-14600	261- - 3
32857-03200	56- - 3
	260- - 3
32857-14600	261- - 1
32858-14600	261- - 1
32865-12400	56- - 3
	260- - 3
32865-14600	261- - 3
32869-03200	56- - 3
	83- - 3
	260- - 3
32873-14600	256- - 4
	261- - 3
32875-14600	261- - 1
32876-14600	261- - 1
32877-14600	261- - 2
32878-14600	261- - 2
32879-14600	261- - 3
32881-10601	55- - 1

PART NO.	PAGE
	254- - 1
32881-10801	55- - 1
	254- - 1
32884-16500	252- - 3
32884-36900	51- - 3
32884-61000	51- - 3
	51- - 3
	252- - 3
32885-14600	261- - 3
32886-14600	261- - 3
32887-14600	256- - 2
	261- - 1
32888-14600	261- - 2
32889-14600	261- - 3
32890-15800	261- - 2
32891-09600	56- - 1
	260- - 1
32892-09600	56- - 1
	260- - 1
32893-09601	56- - 1
	260- - 1
32895-09600	56- - 2
	260- - 2
32910-16500	254- - 1
32911-10601	55- - 1
	254- - 1

Printed in Japan

PART NO.	PAGE
32911-10801	55- - 1
	254- - 1
32912-10600	55- - 1
	254- - 1
32917-36900	55- - 2
	254- - 1
32920-36900	51- - 3
	252- - 3
32921-16500	254- - 2
32921-36900	55- - 2
	254- - 2
32922-10601	55- - 2
	254- - 2
32923-10601	55- - 2
32923-10602	55- - 2
	254- - 2
32923-10802	55- - 2
	254- - 2
32924-36900	55- - 2
	254- - 2
32952-08000	55- - 2
	254- - 2
34102-10651	59- - 1
34102-10851	59- - 1
34102-11751	59- - 1
34102-12101	59- - 1
34102-17050	268- - 1
34102-24500	270- - 2
34103-10600	59- - 1
34103-10800	59- - 1
34103-16500	268- - 1
34103-17000	268- - 1
34103-24500	270- - 2
34104-09400	59- - 2
	268- - 1
	270- - 3
34105-04100	59- - 2
	268- - 1
34105-73000	270- - 3
34110-10600	59- - 1
	268- - 1
34110-20200	270- - 3
34113-10600	59- - 1
	268- - 1
	270- - 3
34115-10600	59- - 2
	268- - 1
	270- - 3
34116-09400	59- - 1
	268- - 1
34116-62800	270- - 3
34117-04100	59- - 1

Printed in Japan

PART NO.	PAGE
	268- - 1
34119-04101	59- - 2
34119-73700	270- - 3
34124-10600	59- - 2
	268- - 1
34124-73200	270- - 3
34125-10600	59- - 2
	268- - 1
34125-36700	270- - 3
34126-61000	60- - 2
	269- - 2
34128-30100	59- - 2
	268- - 2
	270- - 3
34129-04100	59- - 2
	268- - 1
34129-73001	270- - 3
34134-04100	59- - 1
	268- - 1
	270- - 3
34135-10600	59- - 1
	268- - 1
34135-73000	270- - 3
34142-24500	270- - 3
34310-11701	59- - 1
34312-09520	59- - 2
34314-11700	59- - 2
34317-09520	59- - 1
34318-09520	59- - 1
34331-09520	59- - 1
34332-11700	59- - 2
34333-09520	59- - 2
34334-09520	59- - 2
34335-09520	59- - 2
3440 -10600	60- - 1
34400-10600	60- - 1
	269- - 1
34400-24500	270- - 1
34402-04100	60- - 2
	269- - 3
34405-61000	60- - 1
	269- - 1
	270- - 1
34406-24500	270- - 1
34406-61000	60- - 1
	269- - 1
34408-10600	60- - 1
34408-10601	60- - 1
34408-16500	269- - 1
34408-17000	269- - 1
34409-10600	269- - 1
	270- - 1

Printed in Japan

PART NO.	PAGE
34410-04100	60- - 2
	269- - 2
34413-10601	60- - 2
34413-10801	60- - 2
34413-16500	269- - 2
34413-17000	269- - 2
34414-04100	60- - 2
	269- - 3
34414-26760	54- - 4
	257- - 4
	258- - 7
34419-04100	60- - 2
	269- - 3
34431-10601	60- - 1
34431-16500	269- - 1
34431-17000	269- - 1
34434-30000	270- - 1
34438-10601	60- - 2
	269- - 2
34438-10802	60- - 2
34438-17000	269- - 2
34439-10600	60- - 1
	269- - 2
34440-24500	270- - 1
34450-10601	60- - 2
34450-10801	60- - 2
34450-16500	269- - 2
34450-24500	270- - 1
34451-24500	270- - 2
34453-10600	60- - 2
	60- - 2
34453-10601	269- - 2
34453-10802	60- - 2
34453-17000	269- - 2
34458-61000	270- - 2
34461-61000	270- - 2
34462-61000	60- - 2
	269- - 2
	270- - 2
34463-10600	60- - 2
	269- - 2
	270- - 2
34465-61000	270- - 2
34466-10600	60- - 2
	269- - 2
34467-10600	60- - 2
	269- - 2
	270- - 2
34481-73700	270- - 1
	270- - 2
34482-73700	270- - 1
34483-73700	270- - 1

Printed in Japan

PART NO.	PAGE
	270- - 2
34484-73700	270- - 1
	270- - 2
34491-61000	60- - 1
	269- - 1
34492-10600	60- - 1
	269- - 2
34494-36900	60- - 1
	269- - 1
34496-36900	60- - 1
	269- - 1
34496-61000	60- - 1
	269- - 1
34496-61001	60- - 1
	269- - 1
34497-61000	60- - 1
	269- - 1
34501-24500	270- - 2
36010-10600	65- - 1
	276- - 1
36010-10800	65- - 1
	276- - 1
	276- - 1
36010-18910	276- - 1
36320-36700	65- - 1
	276- - 1
36326-10600	65- - 1
	276- - 1
36326-10800	65- - 1
	276- - 1
36328-10601	65- - 1
	276- - 1
36330-36700	65- - 1
	276- - 1
36335-36700	65- - 1
	276- - 1
36337-10600	65- - 1
	276- - 1
36337-10800	65- - 1
36337-36700	276- - 1
36338-36700	65- - 1
	276- - 1
36339-10600	65- - 1
	276- - 1
36339-10800	65- - 1
	276- - 2
36372-10600	65- - 1
	276- - 1
36373-10600	65- - 1
	276- - 1
36374-10600	65- - 2
	276- - 2

Printed in Japan

PART NO.	PAGE
36377-10600	65- - 1
	66- - 1
	276- - 2
	277- - 1
36378-10600	65- - 2
	276- - 2
36378-36700	66- - 1
	277- - 1
36379-10600	65- - 2
	276- - 2
36382-10600	65- - 2
36402-10600	65- - 2
36402-10601	276- - 2
36402-10800	65- - 2
	276- - 2
36402-10801	276- - 2
	276- - 2
	276- - 2
36402-18910	276- - 2
36406-32200	66- - 1
	277- - 1
36408-36700	66- - 1
	277- - 1
36409-10800	66- - 1
	277- - 1
36409-10801	277- - 1
36437-36700	66- - 1
	277- - 1
36451-10600	66- - 1
	277- - 1
36451-15800	277- - 1
36482-10600	66- - 1
	277- - 1
36510-10600	66- - 1
	277- - 1
36510-30000	66- - 1
	277- - 2
36511-10600	277- - 2
36511-15800	277- - 2
36513-09400	66- - 2
	277- - 2
36514-10600	66- - 2
	277- - 2
36514-10601	277- - 2
36518-10600	66- - 2
	277- - 2
36518-10602	277- - 2
36530-10602	277- - 2
36530-10650	66- - 2
	277- - 2
36530-10651	277- - 2
36530-10800	66- - 2

Printed in Japan

PART NO.	PAGE
36530-10802	277- - 3
36530-10850	277- - 3
36530-10851	277- - 3
36531-10602	277- - 3
36531-10650	66- - 2
	277- - 3
36531-10651	277- - 3
36531-10800	66- - 2
36531-10802	277- - 3
36531-10850	277- - 3
36531-10851	277- - 3
36537-30000	66- - 2
	277- - 3
36538-30000	66- - 2
	277- - 4
36541-24000	277- - 1
	277- - 3
	277- - 4
36541-30000	66- - 1
	66- - 2
	277- - 1
	277- - 3
	277- - 4
36543-30000	66- - 2
	277- - 4
36544-30000	66- - 2
	277- - 4
36545-30000	66- - 2
	277- - 4
37000-11600	57- - 1
37000-16500	265- - 1
37000-24500	266- - 1
37111-08000	57- - 1
37111-14600	266- - 1
37111-16500	265- - 1
37113-26760	57- - 1
	265- - 1
37117-11960	57- - 1
	265- - 1
37117-14600	266- - 1
37125-11975	57- - 2
	265- - 2
37125-14600	266- - 1
37126-11960	57- - 1
	265- - 1
37130-11960	57- - 1
	265- - 1
37130-14600	266- - 1
37133-11960	57- - 1
	265- - 1
37134-11960	57- - 1
	265- - 1

Printed in Japan

PART NO.	PAGE
37138-36800	57- - 1
	265- - 1
37146-14600	266- - 1
37147-14600	266- - 1
37148-08000	57- - 1
	265- - 1
37148-14600	266- - 1
37149-08000	57- - 1
	265- - 1
37149-14600	266- - 1
37150-08000	57- - 1
	265- - 1
37151-08000	57- - 1
	265- - 1
37152-08000	57- - 1
	265- - 1
37153-08000	57- - 1
	265- - 1
37203-14916	256- - 3
37210-10600	57- - 1
	265- - 1
37210-16500	266- - 1
37210-24500	266- - 1
37219-26760	57- - 1
	265- - 1
37510-86160	258- - 3
	259- - 3
38100-04101	58- - 1
38100-08300	58- - 1
38100-09600	58- - 1
38100-13201	267- - 1
38100-14301	267- - 1
38100-14401	267- - 1
38100-61000	267- - 1
38102-01300	267- - 1
38102-04100	58- - 1
	267- - 1
38103-01300	267- - 2
38103-04100	58- - 1
38103-13201	267- - 1
38120-04100	58- - 3
38120-13200	267- - 3
38120-13201	267- - 3
38120-61000	267- - 3
38125-61001	267- - 6
38126-61001	267- - 6
38127-09400	58- - 4
	267- - 5
38127-61001	267- - 6
38128-09400	58- - 4
	58- - 4
	267- - 5

Printed in Japan

PART NO.	PAGE
	267- - 6
38128-61001	267- - 6
38129-09400	58- - 4
	267- - 5
38129-61001	267- - 6
38130-09400	58- - 4
	267- - 5
38130-61001	267- - 6
38131-09400	58- - 4
	267- - 5
38131-61001	267- - 6
38132-09400	58- - 4
	267- - 5
38132-61001	267- - 6
38133-09400	58- - 4
	267- - 5
38134-09400	58- - 4
	267- - 5
38134-61001	267- - 7
38135-09400	58- - 4
	267- - 5
38135-61001	267- - 7
38136-09400	58- - 4
	267- - 5
38136-61001	267- - 7
38137-09400	58- - 4

PART NO.	PAGE
	267- - 5
38137-61001	267- - 7
38138-61001	267- - 7
38139-09400	58- - 4
	267- - 6
38139-61001	267- - 7
38140-04100	58- - 3
38140-09400	58- - 4
	267- - 6
38140-13200	267- - 3
38140-13201	267- - 3
38140-61000	267- - 4
38141-09400	58- - 5
	267- - 6
38153-04100	58- - 2
	267- - 3
38153-10601	58- - 3
	267- - 4
38153-25660	58- - 3
38153-61000	267- - 4
	267- - 6
38154-04100	58- - 2
	267- - 3
38154-10601	58- - 3
	267- - 4
38154-25660	58- - 3

Printed in Japan

PART NO.	PAGE
38154-61000	267- - 4
	267- - 6
38155-04100	58- - 2
	267- - 3
38155-10601	58- - 3
	267- - 4
38155-25660	58- - 3
38155-61000	267- - 4
	267- - 6
38156-04100	58- - 2
	58- - 3
	267- - 3
38156-10601	58- - 3
	267- - 4
38156-25660	58- - 3
38156-61000	267- - 4
	267- - 6
38157-10601	58- - 3
38157-61000	267- - 6
38161-04100	58- - 3
	58- - 3
	267- - 3
38161-27160	267- - 3
38164-10600	70- - 1
38164-10601	70- - 1
38164-10651	281- - 1
38165-09401	58- - 3
38165-13200	267- - 4
38165-61001	267- - 4
38166-09401	58- - 3
38166-13200	267- - 4
38166-61001	267- - 4
38167-09400	58- - 3
38167-13200	267- - 4
38167-61001	267- - 4
38189-02700	58- - 3
	267- - 4
38189-61000	267- - 4
38210-09400	58- - 3
38210-13201	267- - 5
38210-16500	267- - 5
38210-61000	267- - 5
38212-04101	70- - 2
	281- - 2
38215-01300	58- - 4
38215-61000	267- - 5
38216-01300	58- - 4
38216-61000	267- - 5
38300-10600	58- - 1
38300-11600	58- - 1
38300-12400	58- - 1
38300-13200	267- - 1

Printed in Japan

PART NO.	PAGE
38300-14300	267- - 1
38300-15801	267- - 1
38310-04100	58- - 1
38310-10400	58- - 1
38310-13201	267- - 1
38310-75000	267- - 1
38315-01302	267- - 1
38315-04100	58- - 1
38315-13200	267- - 1
38320-04100	58- - 5
	267- - 7
38320-04110	267- - 7
38320-25660	267- - 7
38322-14601	256- - 2
38322-55100	51- - 1
	52- - 1
	70- - 2
	252- - 1
	255- - 1
	281- - 2
38421-04105	58- - 1
38421-07200	267- - 2
38421-13200	267- - 2
38423-10600	58- - 2
	267- - 2
38423-14600	267- - 2
38424-04101	58- - 2
	267- - 2
38424-08000	58- - 2
	267- - 2
38424-08001	58- - 2
	267- - 2
38424-08002	58- - 2
	267- - 2
38424-08003	58- - 2
	267- - 2
38424-25660	267- - 2
38424-32200	267- - 2
38424-32201	267- - 2
38424-32202	267- - 2
38425-00100	267- - 2
38425-04100	58- - 2
	267- - 2
38426-04100	58- - 2
	267- - 2
38426-32200	267- - 2
38427-04100	58- - 2
	267- - 2
38427-25660	267- - 2
38428-25660	58- - 2
	267- - 3
38440-04100	58- - 2

Printed in Japan

PART NO.	PAGE
	.....267- - 3
38440-14361	..... 68- - 1
	.....279- - 1
	.....279- - 2
38440-25660	.....267- - 3
38453-10600	..... 58- - 2
38453-27160	.....267- - 3
38453-61200	.....267- - 4
38454-10600	..... 58- - 2
38455-10600	..... 58- - 2
38455-27160	.....267- - 3
	.....267- - 3
38456-27160	.....267- - 3

PART NO.	PAGE
40000	
40000-16550	.....278- - 1
40000-16555	.....278- - 1
40000-16750	.....278- - 1
40000-17050	.....278- - 1
40014-10650	.....278- - 1
40014-16555	.....278- - 1
40015-10650	..... 67- - 1
	.....278- - 1
40029-25660	..... 67- - 1
	.....278- - 1
40037-04100	..... 68- - 1
	.....279- - 1
	.....279- - 2
40038-10600	..... 67- - 3
	.....278- - 3
40040-04100	..... 67- - 1
	.....278- - 1
	.....279- - 2
40052-10601	..... 67- - 2
	.....278- - 2
40052-16500	.....278- - 2
40052-16505	.....278- - 2
40053-10601	..... 67- - 2
	.....278- - 2

Printed in Japan

PART NO.	PAGE	PART NO.	PAGE
40053-16500	278- - 2	40142-16501	278- - 1
40053-16505	278- - 2	40160-16500	278- - 2
40056-10601	62- - 3	40161-16500	67- - 2
	272- - 4		278- - 2
40057-10601	67- - 2	40161-24000	278- - 2
	278- - 2	40192-16501	278- - 2
40060-10601	67- - 1	40202-10650	68- - 1
40074-10601	67- - 1	40202-16550	279- - 1
40074-10602	67- - 1	40202-16555	279- - 2
40080-10600	67- - 1	40206-10500	68- - 1
40080-10601	67- - 1		70- - 2
40081-04100	67- - 1		281- - 2
	67- - 1	40206-10501	68- - 1
	278- - 1		279- - 1
	285- - 1	40206-16505	279- - 2
40090-10600	67- - 1	40207-10600	279- - 1
40094-10601	67- - 2		281- - 2
40094-10602	67- - 2	40209-16505	279- - 2
40094-10604	67- - 2	40215-10360	68- - 1
40096-10601	67- - 2		279- - 1
	278- - 2		279- - 2
40100-10600	67- - 1	40221-04101	70- - 1
40103-13200	67- - 2		281- - 1
	285- - 1	40221-10600	68- - 1
40110-16500	278- - 1	40221-14600	279- - 2
40110-16501	278- - 1	40222-16500	279- - 1

Printed in Japan

PART NO.	PAGE
40225-04400	68- - 1
	279- - 1
40227-08000	68- - 1
	279- - 1
40231-04100	68- - 1
	279- - 1
40232-16500	279- - 1
40234-04100	68- - 1
	279- - 2
	279- - 2
40300-10500	279- - 1
40300-10600	68- - 1
	279- - 1
40307-10600	68- - 1
	279- - 1
40315-10600	68- - 1
	279- - 1
40315-11401	68- - 1
	279- - 1
40315-16600	279- - 1
41000-10600	62- - 1
	272- - 1
41000-16506	273- - 1
41000-16508	273- - 1
41000-19400	272- - 1
41010-10600	62- - 1
	272- - 1
41010-16505	273- - 1
41010-16508	273- - 1
41010-19400	272- - 1
41020-10600	62- - 1
	272- - 1
41020-18400	272- - 1
41020-30001	62- - 3
	272- - 4
41021-16505	273- - 1
41025-16505	273- - 1
41028-10600	62- - 3
	62- - 3
	272- - 4
41029-10500	62- - 3
	272- - 4
41030-10600	62- - 1
	272- - 1
41030-18400	272- - 1
41031-16505	273- - 1
41035-16505	273- - 1
41040-16505	273- - 2
41041-16505	273- - 2
41060-10500	62- - 1
	272- - 1
41060-16505	273- - 1

Printed in Japan

PART NO.	PAGE
41060-16508	273- - 1
41066-10500	62- - 1
	63- - 1
	272- - 1
	274- - 1
41066-17100	274- - 1
41070-16505	273- - 1
41070-16508	273- - 1
41080-16505	273- - 1
41083-10600	62- - 3
	272- - 4
41085-16505	273- - 2
41086-16505	273- - 1
41087-16505	273- - 1
41088-16505	273- - 1
41090-10601	62- - 1
41090-10602	62- - 1
	272- - 1
41100-10600	62- - 1
	272- - 1
41100-10625	272- - 4
41100-10626	272- - 4
41100-10627	272- - 4
41100-10628	272- - 4
41100-16505	273- - 2
41100-18400	272- - 1
41101-10600	62- - 2
	272- - 2
41101-18400	272- - 2
41102-10600	62- - 1
	272- - 1
41102-18400	272- - 1
41103-10600	62- - 2
	272- - 2
41103-18400	272- - 2
41110-10500	62- - 1
	62- - 2
	272- - 2
	272- - 3
41110-16505	273- - 2
41116-10500	62- - 1
	62- - 2
	272- - 2
	272- - 2
41116-10610	62- - 1
	62- - 2
	272- - 2
	272- - 2
41122-10610	62- - 1
	62- - 2
	272- - 2
	272- - 3

Printed in Japan

PART NO.	PAGE
41122-18400	272- - 2
	272- - 3
41123-10500	62- - 1
	62- - 2
	272- - 2
	272- - 3
41123-10610	62- - 1
	62- - 2
	272- - 2
	272- - 3
41124-16505	273- - 2
41125-30001	62- - 1
	62- - 2
	272- - 2
	272- - 2
41128-08000	272- - 3
41128-08010	62- - 2
	272- - 3
41128-16505	273- - 2
41128-18400	272- - 3
41128-18410	272- - 3
41128-30001	62- - 2
	63- - 2
	249- - 1
	271- - 3
	272- - 3
	274- - 4
41129-16505	273- - 2
41129-30001	62- - 2
	62- - 2
	63- - 2
	249- - 1
	271- - 3
	272- - 2
	272- - 3
	274- - 4
41130-08000	62- - 2
	272- - 3
41130-08010	62- - 2
	272- - 3
41140-10600	62- - 3
	272- - 4
41141-10600	62- - 3
	272- - 4
41158-04100	62- - 2
	272- - 3
41158-04110	62- - 2
	272- - 3
41161-10600	62- - 2
	272- - 2
41161-10610	62- - 2
	272- - 2

Printed in Japan

PART NO.	PAGE
41162-10600	62- - 2
	272- - 3
43000-15855	281- - 1
43000-16550	281- - 1
43000-16750	281- - 1
43000-16950	281- - 1
43000-16951	281- - 1
43000-17050	281- - 1
43000-17150	281- - 1
43010-10600	70- - 2
	281- - 2
43010-10800	70- - 2
	281- - 2
43010-15800	281- - 2
43027-04100	70- - 2
	281- - 2
43036-04100	70- - 1
	281- - 1
43036-10601	70- - 1
43067-30000	70- - 2
	281- - 2
43068-04101	70- - 2
	281- - 2
43070-04101	70- - 1
	281- - 1
43083-04101	70- - 2
	281- - 2
43083-18400	281- - 2
43084-10600	70- - 1
	281- - 1
43100-10800	70- - 1
43100-10801	70- - 1
43100-11600	70- - 1
43100-12400	70- - 1
43100-12401	70- - 1
43100-12500	70- - 1
43100-12501	70- - 1
43215-08000	70- - 1
	281- - 1
43223-04101	70- - 2
	281- - 2
43233-04100	70- - 2
	281- - 2
43234-04101	70- - 2
	281- - 1
43234-18400	281- - 1
	281- - 1
43234-18401	281- - 2
43235-04101	70- - 2
	281- - 1
43239-04100	70- - 2
	281- - 1

Printed in Japan

PART NO.	PAGE
43560-16500	74- - 1
44000-10600	63- - 1
	274- - 1
44000-18800	274- - 1
44000-19400	274- - 1
44010-10600	63- - 1
	274- - 1
44010-18800	274- - 1
44010-19400	274- - 1
44020-10600	63- - 1
	274- - 1
44030-10600	63- - 1
	274- - 1
44060-10500	63- - 1
	274- - 1
44060-17100	274- - 1
44070-10500	63- - 1
	274- - 1
44070-17100	274- - 1
44070-30001	63- - 1
	274- - 1
44071-30001	63- - 1
	274- - 2
44081-04100	63- - 2
	274- - 4
44081-32201	62- - 3
	272- - 4
44082-32200	62- - 3
	272- - 4
44084-30000	63- - 2
	274- - 4
44084-32201	62- - 3
	272- - 4
44090-16505	274- - 1
44100-10600	63- - 1
	274- - 2
44100-10625	274- - 2
44100-10626	274- - 2
44100-10627	274- - 2
44100-10628	274- - 2
44100-18400	274- - 2
44100-18800	274- - 2
44100-18825	274- - 2
44100-18826	274- - 3
44100-18827	274- - 3
44100-18828	274- - 3
44108-18800	274- - 2
44110-10501	63- - 1
	274- - 2
44110-10610	63- - 1
	274- - 2
44112-12060	62- - 1

Printed in Japan

PART NO.	PAGE
	62- - 2
	272- - 2
	272- - 3
44112-12061	62- - 1
	62- - 2
	272- - 2
	272- - 3
44112-18800	274- - 2
44113-31700	63- - 1
	274- - 3
44113-31710	63- - 1
	274- - 3
44114-10501	63- - 1
	274- - 2
44118-18410	274- - 3
44118-18800	274- - 3
44118-30001	63- - 1
	274- - 3
44118-30011	63- - 1
	274- - 3
44124-31700	63- - 1
	274- - 2
44124-31710	63- - 1
	274- - 2
44141-31700	63- - 2
	274- - 3
44141-31710	63- - 2
	274- - 3
44142-31700	63- - 2
	274- - 3
44142-31710	63- - 2
	274- - 3
44144-10610	274- - 4
44144-31700	63- - 2
	274- - 4
44144-31710	63- - 2
44149-18410	274- - 3
	274- - 3
44149-31700	63- - 2
	274- - 4
44149-31710	63- - 2
	274- - 3
44150-31700	63- - 2
	274- - 4
44150-31710	63- - 2
	274- - 3
44200-18400	274- - 4
44202-18400	274- - 4
44205-10500	63- - 2
	274- - 4
46010-10600	61- - 2
	61- - 2

Printed in Japan

PART NO.	PAGE
46010-10601	61- - 2
	271- - 2
46010-10800	61- - 2
	271- - 2
46010-10825	271- - 4
46010-10826	271- - 4
46010-10827	271- - 4
46010-10828	271- - 4
46010-18901	271- - 2
46010-18925	271- - 4
46010-18926	271- - 4
46016-10610	271- - 2
46016-12200	271- - 2
46020-10600	44- - 3
	61- - 3
	250- - 3
46020-10601	250- - 3
	271- - 2
46020-10610	44- - 3
	61- - 3
	250- - 3
46020-10611	271- - 2
46027-10600	271- - 2
46027-10610	271- - 2
46032-27260	44- - 3
	47- - 1

PART NO.	PAGE
	250- - 3
46034-01300	47- - 1
	61- - 3
	250- - 3
46034-02700	44- - 3
	61- - 3
	250- - 3
46035-01300	47- - 1
46038-10610	271- - 3
46038-12200	271- - 3
46041-10610	271- - 3
46042-27260	271- - 3
46043-27260	44- - 3
	47- - 1
	250- - 3
	271- - 3
46050-10600	271- - 2
46050-10610	271- - 2
46050-14600	271- - 2
46050-27260	61- - 2
46055-27260	61- - 2
46056-27260	47- - 1
46057-27260	61- - 2
46061-10600	271- - 3
46061-10610	271- - 3
46061-27260	61- - 2

Printed in Japan

PART NO.	PAGE
46061-30000	44- - 2
	250- - 2
46062-27260	61- - 2
46063-10600	61- - 2
46063-10601	271- - 3
46063-10611	271- - 3
46063-16500	271- - 3
46063-27260	61- - 2
46064-27260	61- - 2
46064-27261	61- - 2
46064-30000	44- - 2
	47- - 1
	250- - 3
46064-30002	44- - 2
	250- - 3
46065-30000	44- - 2
	47- - 1
	250- - 3
46065-30001	44- - 2
46065-30002	250- - 3
46068-27260	61- - 2
46068-27261	61- - 2
46069-30000	47- - 1
46070-10600	271- - 3
46070-10610	271- - 3
46070-18900	271- - 3
46070-27260	44- - 3
	47- - 1
	250- - 3
46071-27260	61- - 2
	271- - 3
46073-30800	47- - 1
46075-27260	47- - 1
	271- - 3
46076-08700	44- - 2
	250- - 2
46076-30800	47- - 1
46077-08710	44- - 2
	250- - 2
46077-30800	47- - 1
46079-27260	44- - 3
	47- - 1
	250- - 3
	271- - 3
46080-10600	44- - 2
	61- - 2
	250- - 3
	271- - 3
46080-10610	61- - 2
46080-10611	271- - 3
46080-18900	271- - 3
46080-30500	47- - 2

Printed in Japan

PART NO.	PAGE
46084-18900	271- - 3
46091-10600	271- - 2
46091-10610	271- - 2
46091-16500	271- - 2
46100-27260	44- - 3
	47- - 2
	61- - 3
	250- - 3
	271- - 3
46117-27260	61- - 3
	271- - 4
46118-27260	61- - 3
	271- - 4
46119-27260	61- - 3
	271- - 4
46123-08700	44- - 1
	44- - 2
	46- - 1
	61- - 1
	250- - 2
	250- - 2
	271- - 2
46123-85460	44- - 1
	250- - 2
46124-35100	44- - 1
	46- - 1
	65- - 2
	66- - 1
	66- - 1
	250- - 2
	276- - 2
	277- - 1
	277- - 1
46160-24000	278- - 2
46201-10600	64- - 2
46201-15800	275- - 2
46201-61000	64- - 2
	275- - 2
	275- - 2
46201-61001	64- - 2
	275- - 2
46205-61000	64- - 2
	249- - 2
	275- - 3
46206-61000	64- - 2
	249- - 2
	275- - 3
46212-10600	249- - 2
46223-10601	64- - 1
	64- - 1
	275- - 1
46223-10800	64- - 1

Printed in Japan

PART NO.	PAGE
46223-10801	64- - 1
	275- - 1
46223-15800	275- - 1
46234-10600	64- - 1
	275- - 1
46234-10601	275- - 1
46237-30000	64- - 2
	249- - 2
	275- - 2
46240-10600	64- - 1
46240-10651	64- - 1
	275- - 1
46242-10600	64- - 1
46242-10650	64- - 1
	275- - 1
46242-15800	275- - 1
46280-10600	64- - 1
	275- - 1
46280-20200	275- - 1
46290-10600	64- - 2
	275- - 2
46290-15800	275- - 2
46290-18400	275- - 2
46290-18401	275- - 2
46290-18800	275- - 2
46310-10600	64- - 2
	275- - 2
46310-15800	275- - 2
46310-18400	275- - 2
46310-18401	275- - 2
46310-18800	275- - 2
46345-10601	64- - 1
	275- - 1
46345-18400	275- - 1
46357-35000	64- - 1
	275- - 2
46357-35001	275- - 2
46361-15800	275- - 3
46361-61000	64- - 2
	275- - 3
	275- - 3
46362-08500	64- - 2
	275- - 3
46363-08500	64- - 2
	275- - 3
46410-10601	41- - 1
	249- - 2
46410-10800	41- - 1
46410-10801	41- - 1
	249- - 2
46410-11700	41- - 1
46410-11702	41- - 1

Printed in Japan

PART NO.	PAGE
46410-15801	249- - 2
46410-18900	249- - 2
46425-18400	250- - 1
	271- - 1
46425-30000	44- - 1
	61- - 1
	250- - 1
	271- - 1
46460-04100	44- - 2
	61- - 1
	250- - 2
	271- - 1
46460-32200	61- - 1
	271- - 1
46462-34500	61- - 2
46470-10600	79- - 4
	290- - 4
46470-10800	79- - 4
46470-10850	290- - 5
46470-15830	290- - 5
46470-16030	290- - 5
46470-18701	290- - 5
46470-19501	290- - 5
46482-30000	44- - 2
	61- - 1
	250- - 2
	271- - 1
46483-10800	61- - 1
	271- - 1
46485-32200	61- - 2
	271- - 2
46488-04100	250- - 2
46510-08700	44- - 2
	61- - 1
	250- - 2
46520-10603	271- - 1
46520-10652	61- - 1
	271- - 1
46520-10801	271- - 1
46520-10850	61- - 1
	271- - 1
46520-11750	61- - 1
46520-12150	61- - 1
46520-24500	271- - 1
46525-73000	250- - 1
	271- - 1
46531-10601	44- - 1
	61- - 1
	250- - 1
	271- - 1
46531-11700	61- - 1
	271- - 1

Printed in Japan

NISSAN MOTOR CO., LTD.

INDEX (CLASSFIED BY PARTS NO.)

PART NO.	PAGE
46540-10601	44- - 1
	250- - 1
46540-10603	250- - 1
46540-10800	44- - 1
	250- - 1
46540-10801	250- - 1
46540-15800	250- - 1
46540-15801	250- - 1
46571-10600	44- - 1
	250- - 1
46574-61000	44- - 1
46577-16500	250- - 1
46577-61000	44- - 1
	250- - 1
46582-18400	250- - 2
	271- - 1
46583-10600	44- - 1
46584-61000	44- - 1
	250- - 2
46587-15800	250- - 1
48010-10651	73- - 1
48010-10851	73- - 1
48010-15851	284- - 1
48010-16051	284- - 1
48010-16550	284- - 1
48010-16551	284- - 1
48010-17050	284- - 1
48011-10601	73- - 1
48011-10801	73- - 1
48011-16500	284- - 1
48011-16501	284- - 1
48011-17000	284- - 1
48024-16500	284- - 2
48024-17000	284- - 2
48025-04100	73- - 3
48025-16500	284- - 2
48029-71200	284- - 1
48030-71200	284- - 2
48031-71200	284- - 2
48032-71200	284- - 2
48035-04100	73- - 2
	73- - 2
48035-71200	284- - 2
48046-30800	73- - 3
48047-30800	73- - 3
48050-10600	73- - 2
48050-10800	73- - 2
48050-16500	284- - 2
48050-16501	284- - 2
48050-17000	284- - 2
48050-17001	284- - 2
48054-32200	73- - 3

Printed in Japan

PART NO.	PAGE
	284- - 2
48062-30800	73- - 3
48064-16500	284- - 1
48064-27160	73- - 1
48100-10601	73- - 3
48103-16500	284- - 2
48105-30800	73- - 3
48106-30800	73- - 3
48107-30800	73- - 3
48108-95960	73- - 3
48109-95960	73- - 3
48110-95960	73- - 3
48111-95960	73- - 3
48125-10600	73- - 3
48126-10600	73- - 3
48127-16700	284- - 1
48127-32200	73- - 1
48128-32200	73- - 1
48129-71200	284- - 2
48130-71200	284- - 2
48131-71200	284- - 2
48132-71200	284- - 2
48133-71200	284- - 3
48134-71200	284- - 3
48135-30800	73- - 2
48135-32200	284- - 2

PART NO.	PAGE
48137-16500	284- - 1
48137-36700	73- - 1
48201-10600	73- - 1
48201-16500	284- - 1
48204-10600	73- - 1
48204-16500	284- - 1
48206-30800	73- - 1
48210-10600	73- - 2
48211-10600	73- - 2
48211-10602	73- - 2
48212-10600	73- - 2
48212-10602	73- - 2
48213-10600	73- - 2
48213-10602	73- - 2
48214-10602	73- - 2
48215-10600	73- - 3
	284- - 7
48219-10600	73- - 2
48324-10600	79- - 4
	290- - 5
48325-04100	79- - 4
	290- - 5
48326-10600	79- - 4
	290- - 5
48327-10651	72- - 2
	283- - 2

Printed in Japan

PART NO.	PAGE
48327-10851	72- - 2
	283- - 2
48327-11550	72- - 2
48327-12450	72- - 2
	283- - 3
48400-10600	72- - 1
48400-10610	72- - 1
48400-11500	72- - 1
48400-11510	72- - 2
48400-13200	72- - 1
	72- - 2
	283- - 1
	283- - 2
48400-13700	72- - 1
48400-15800	283- - 2
48400-16500	283- - 1
	283- - 2
48400-18500	283- - 1
	283- - 2
48400-19400	283- - 2
48405-30800	73- - 4
	284- - 3
48418-30800	73- - 4
	284- - 3
48419-30800	73- - 4
	284- - 3
48420-10600	72- - 1
48420-10610	72- - 2
48420-11500	72- - 1
48420-11510	72- - 2
48420-13200	72- - 1
	72- - 2
	283- - 1
	283- - 2
48420-13700	72- - 1
48420-15800	283- - 2
48420-16510	283- - 2
48422-10600	72- - 1
48422-10610	72- - 2
48422-11500	72- - 1
48422-11510	72- - 2
48422-13205	283- - 1
48422-13210	72- - 2
	283- - 2
48422-15810	283- - 2
48423-10600	72- - 1
	283- - 1
48423-15810	283- - 2
48424-10600	72- - 1
48425-10600	72- - 1
	283- - 1
48426-10600	72- - 1

Printed in Japan

PART NO.	PAGE
	283- - 1
48427-10600	72- - 1
	283- - 1
48428-10600	72- - 1
	283- - 1
48429-10600	72- - 1
48429-10610	72- - 2
	283- - 2
48430-10600	72- - 1
	283- - 1
48430-10610	72- - 2
	283- - 2
48431-10610	72- - 2
	283- - 2
48432-10610	72- - 2
	283- - 2
48450-10610	72- - 2
	283- - 2
48451-10610	72- - 2
	283- - 2
48451-13205	283- - 1
48452-10610	72- - 2
	283- - 2
48466-13205	283- - 1
48470-24500	270- - 4
48470-24501	270- - 4
48473-24500	270- - 3
48473-24501	270- - 3
48475-20200	270- - 4
48502-10650	73- - 3
48502-10652	73- - 3
	73- - 4
48502-10850	73- - 4
48502-10851	73- - 4
48502-10852	73- - 4
48502-15800	284- - 3
48502-16500	284- - 3
48502-17000	284- - 3
48510-10600	74- - 1
48510-13200	74- - 1
48510-16500	285- - 1
48512-10600	74- - 2
	285- - 2
48514-01000	74- - 3
	285- - 2
48520-04100	74- - 2
48520-13200	74- - 2
48520-16500	285- - 1
48520-01000	74- - 2
48521-10600	74- - 2
48521-13200	74- - 2
48521-16500	285- - 1

Printed in Japan

PART NO.	PAGE
48521-61000	74- - 2
48522-04300	74- - 2
48522-13200	74- - 2
48522-16501	285- - 1
48526-13200	74- - 2
48530-10600	74- - 3
48530-10800	74- - 3
48530-13201	74- - 3
	285- - 2
48530-13901	74- - 3
	285- - 2
48530-15801	285- - 2
48531-10600	74- - 3
48531-10800	74- - 3
48532-10600	74- - 3
48541-10600	74- - 3
48544-10600	74- - 3
48545-10600	74- - 3
48550-10600	74- - 3
48550-13200	74- - 3
48560-10800	74- - 1
48560-13200	74- - 1
48560-13900	74- - 1
48560-16500	285- - 1
48560-17000	285- - 1
48577-13200	74- - 1
	285- - 1
48577-61000	74- - 1
48581-13201	74- - 1
	74- - 1
	285- - 1
48587-10600	74- - 1
48587-13200	74- - 1
	285- - 1
48630-10600	74- - 1
48630-13200	74- - 2
48630-16500	285- - 1
48640-13200	74- - 2
48640-16500	285- - 1
48641-16500	74- - 2
	74- - 2
	285- - 1

Printed in Japan

PART NO.	PAGE
50000	
54010-10603	69- - 1
	69- - 1
	280- - 1
	280- - 1
	280- - 2
	280- - 2
54010-10604	69- - 1
	69- - 1
	280- - 1
54010-11601	69- - 2
	280- - 2
54010-15800	280- - 2
54010-15801	280- - 2
	280- - 2
54036-10600	69- - 2
	280- - 2
54037-10600	69- - 2
	280- - 2
54050-10601	67- - 3
54050-10604	67- - 3
	278- - 3
54051-10600	67- - 4
	278- - 4
54401-10600	69- - 1
	280- - 1
54401-15800	280- - 1
54419-10600	67- - 3
	278- - 3
54464-10600	69- - 1
	280- - 1
54465-10600	69- - 1
	280- - 1
54466-10600	69- - 1
	280- - 1
54467-10600	69- - 1
	280- - 1
54468-10600	69- - 1
	280- - 1
54469-10600	69- - 1
	280- - 1
54501-10600	67- - 4
54501-10601	67- - 4
54504-10600	67- - 3
	278- - 3
54507-10600	67- - 4
	278- - 3
54522-10600	69- - 1
	280- - 1
54529-10602	67- - 3
54529-10603	67- - 3

Printed in Japan

PART NO.	PAGE
	278- - 3
54530-10602	67- - 3
54530-10603	67- - 3
	278- - 3
54533-10600	67- - 3
54533-10601	67- - 4
	278- - 3
54534-10600	67- - 4
54534-10601	67- - 4
	278- - 3
54536-10600	67- - 4
	278- - 3
54540-10601	67- - 3
	278- - 3
54541-10601	278- - 3
54542-04101	67- - 4
	278- - 4
54543-04101	67- - 4
	278- - 4
54544-04101	67- - 4
	278- - 4
54551-10600	67- - 3
54554-32200	67- - 3
	278- - 3
54611-10600	69- - 2
	280- - 2
54613-32200	69- - 2
	280- - 2
54614-10600	69- - 2
	280- - 2
54619-10601	69- - 2
	280- - 2
54630-10600	69- - 2
	280- - 2
55020-10606	282- - 1
55020-10903	282- - 2
55020-11002	71- - 1
55020-11602	71- - 1
	282- - 1
55020-13200	282- - 4
55020-15800	282- - 1
55020-19600	282- - 2
55020-20200	282- - 5
55020-24500	282- - 4
	282- - 4
55020-24600	282- - 5
55021-10606	282- - 1
55021-10903	282- - 2
55021-11002	71- - 1
55021-11602	71- - 1
	282- - 1
55021-11699	282- - 4

Printed in Japan

PART NO.	PAGE
55021-15800	282- - 1
55021-19600	282- - 2
55022-10606	282- - 1
55022-10903	282- - 2
55022-11002	71- - 1
55022-11602	71- - 1
	282- - 1
55022-15800	282- - 1
55022-19600	282- - 2
55023-10606	282- - 1
55023-10903	282- - 2
55023-11002	71- - 1
55023-11602	71- - 1
	282- - 1
55023-15800	282- - 1
55023-19600	282- - 2
55024-10606	282- - 1
55024-10903	282- - 2
55024-11002	71- - 1
55024-11602	71- - 1
	282- - 1
55024-15800	282- - 1
55024-19600	282- - 2
55025-10903	282- - 2
55025-11002	71- - 1
55025-11602	71- - 1
	282- - 1
55025-15800	282- - 1
55025-19600	282- - 2
55026-10903	282- - 2
55030-10903	71- - 1
	282- - 2
55041-10605	71- - 1
	282- - 2
55045-10610	71- - 1
	282- - 3
55046-10610	71- - 2
	282- - 3
55054-04101	71- - 2
	282- - 3
55054-14600	282- - 5
55054-24500	282- - 5
55054-24501	282- - 5
55054-24700	282- - 5
55055-24500	282- - 5
55056-04100	71- - 1
	282- - 3
55057-04101	282- - 2
55057-10903	282- - 3
55057-11002	71- - 1
55057-11600	71- - 1
	282- - 2

Printed in Japan

PART NO.	PAGE
55057-15800	282- - 2
55215-10601	71- - 1
	282- - 3
55218-10600	71- - 2
	282- - 3
55219-10602	71- - 2
	282- - 3
55220-10600	71- - 2
	282- - 3
55221-10600	71- - 2
	282- - 3
55240-10600	71- - 2
55240-13200	71- - 2
	282- - 3
55240-15800	282- - 5
55240-24500	282- - 5
55243-04100	71- - 2
	282- - 3
	282- - 5
55243-20200	282- - 5
55243-24500	282- - 5
	282- - 5
55243-24701	282- - 5
55247-10600	71- - 2
	282- - 3
55247-24601	282- - 5
55260-10600	71- - 1
	282- - 3
55262-10600	71- - 2
55262-16500	282- - 3
55262-24500	282- - 5
55266-10600	71- - 2
55266-16500	282- - 3
55266-24500	282- - 5
56110-10625	69- - 2
	280- - 2
	280- - 3
56110-10627	69- - 2
	280- - 3
56110-11625	69- - 2
56110-15825	280- - 3
56112-09400	69- - 2
	69- - 2
	71- - 2
	280- - 2
	280- - 3
	282- - 4
56113-09400	69- - 2
	69- - 2
	71- - 2
	280- - 2
	280- - 3

Printed in Japan

PART NO.	PAGE
	282- - 4
56113-18800	282- - 4
56114-09400	69- - 2
	69- - 2
	71- - 3
	280- - 2
	280- - 3
	282- - 4
56119-32201	71- - 3
	282- - 4
56121-32201	71- - 3
	282- - 4
56140-10600	69- - 3
	280- - 3
56210-10627	71- - 2
56210-11625	71- - 2
56210-13225	282- - 4
	282- - 4
56210-13226	71- - 2
	282- - 4
56210-15825	282- - 4
56210-19625	282- - 4
56225-10601	71- - 3
	282- - 4
57210-10600	91- - 3
57210-10901	94- - 1

PART NO.	PAGE
	305- - 1
57210-13200	302- - 8
57210-16500	302- - 8
57214-10601	91- - 4
	94- - 1
57216-10600	91- - 4
	94- - 1
	302- - 8
	305- - 1
	311- - 1
57216-24000	302- - 8
	305- - 1
	311- - 1
57305-11400	91- - 4
	302- - 8

Printed in Japan

PART NO.	PAGE
60000	
61224-35210	96- - 3
	309- - 5
62300-13200	286- - 1
	286- - 1
62300-18400	286- - 1
62300-19400	286- - 1
62303-10601	75- - 1
62303-13200	75- - 1
62329-10600	75- - 1
62330-10600	75- - 1
62330-13200	75- - 1
62331-10600	75- - 1
62331-13200	75- - 1
62332-13200	75- - 1
	286- - 1
62410-10601	38- - 3
62410-13200	38- - 3
	38- - 3
	240- - 2
	240- - 3
62410-18400	240- - 3
62410-19400	240- - 3
62411-10601	38- - 3
62500-10630	76- - 1
	95- - 2
62500-10830	76- - 1
62500-15830	287- - 1
62500-16030	287- - 1
62500-16530	287- - 1
	306- - 4
62500-17030	287- - 1
62602-10630	76- - 1
	95- - 3
62602-10830	76- - 1
	95- - 3
62602-13231	287- - 1
	306- - 6
62602-13930	76- - 1
62602-13931	287- - 1
	306- - 6
62604-13231	76- - 1
62608-10600	95- - 3
	306- - 6
62650-10650	75- - 2
62650-10850	75- - 2
62650-13200	75- - 2
	286- - 2
62650-13900	75- - 2
	286- - 2
62663-10800	75- - 3

Printed in Japan

PART NO.	PAGE
62663-11400	75- - 3
	90- - 2
	90- - 2
62665-10800	75- - 3
62665-13600	75- - 3
	90- - 2
	286- - 3
	302- - 3
62666-13600	75- - 3
	90- - 2
	286- - 3
	302- - 3
62670-13600	75- - 3
	75- - 3
	90- - 2
	286- - 3
	302- - 3
62670-18400	286- - 3
	302- - 3
62671-10600	75- - 2
	286- - 2
62671-16500	286- - 2
62671-36700	90- - 1
	302- - 2
62672-10600	75- - 2
	286- - 2
62672-16500	286- - 2
62672-36700	75- - 3
	286- - 3
62673-10600	75- - 2
	286- - 2
62673-16500	286- - 2
62674-10600	75- - 2
	286- - 2
62674-16500	286- - 2
62675-10601	75- - 2
62675-10602	75- - 3
	286- - 3
62677-10600	90- - 2
62677-10601	90- - 2
	302- - 3
62800-11400	75- - 1
62800-13200	75- - 1
	286- - 1
62800-18401	286- - 1
62800-19400	286- - 1
62810-18800	286- - 2
	302- - 7
62810-18900	286- - 2
62810-19400	286- - 2
62811-10600	76- - 1
	95- - 2

Printed in Japan

PART NO.	PAGE
	.....287- - 1
	.....306- - 4
63100-10630.....	76- - 1
	..... 95- - 3
63100-10631.....	76- - 1
	..... 95- - 3
	.....306- - 6
63100-10830.....	76- - 1
	..... 95- - 4
63100-10832.....	76- - 1
	..... 95- - 4
	.....287- - 1
	.....306- - 6
63100-11632.....	287- - 1
63101-10630.....	76- - 2
	..... 95- - 4
63101-10631.....	76- - 2
	..... 95- - 4
	.....306- - 6
63101-10830.....	76- - 2
	..... 95- - 4
63101-10834.....	76- - 2
	..... 95- - 4
	.....287- - 2
	.....306- - 6
63101-11634.....	287- - 2
63145-10600.....	76- - 3
63145-10601.....	76- - 3
	.....287- - 3
63145-18400.....	287- - 3
63146-10600.....	76- - 3
63146-10601.....	76- - 3
	.....287- - 3
63147-10600.....	76- - 3
63147-10601.....	76- - 3
	.....287- - 3
63148-10600.....	76- - 3
	.....287- - 3
63803-73701.....	302- - 7
63806-10601.....	286- - 3
63806-10800.....	75- - 3
63806-10801.....	75- - 4
63806-10802.....	286- - 4
63806-11401.....	75- - 3
	.....286- - 3
63806-17200.....	286- - 4
63806-18400.....	286- - 3
63806-18500.....	286- - 4
63806-18900.....	286- - 4
63831-10600.....	38- - 3
	.....240- - 3
64100-10630.....	95- - 2

Printed in Japan

PART NO.	PAGE
64100-13230	95- - 2
64100-13830	95- - 2
64100-13930	95- - 2
64100-16530	306- - 4
64100-16930	306- - 4
64100-17030	306- - 4
64100-24500	306- - 4
64101-10630	95- - 2
64101-15830	306- - 4
64101-16530	306- - 4
64101-16730	306- - 4
64101-17030	306- - 4
64101-17130	306- - 5
64101-18400	306- - 4
64101-18700	306- - 5
64101-18710	306- - 5
64101-18800	306- - 4
64101-19400	306- - 4
64821-32200	82- - 6
	83- - 4
	295- -13
65100-10630	76- - 1
	95- - 6
	287- - 1
	306- - 9
65100-16530	287- - 1
65157-10600	76- - 3
	287- - 3
65158-10600	76- - 3
	287- - 3
65405-10600	76- - 2
	287- - 2
65405-16500	287- - 2
65406-10600	76- - 2
	287- - 2
65406-16500	287- - 2
65409-10600	76- - 2
	287- - 2
65601-10600	77- - 2
	77- - 2
	288- - 2
65604-04101	77- - 2
	288- - 2
65605-01300	77- - 2
	288- - 2
65608-26260	77- - 2
	288- - 2
65609-04100	77- - 2
65609-10600	77- - 2
	288- - 2
65618-04100	77- - 1
	288- - 1

Printed in Japan

PART NO.	PAGE
65621-04100	77- - 1
	288- - 1
65622-10600	77- - 1
	288- - 1
65628-26260	77- - 1
	288- - 1
65630-01300	77- - 1
	288- - 1
65640-10600	77- - 1
65640-13200	77- - 1
	288- - 1
65642-10600	77- - 1
	288- - 1
65644-16500	288- - 1
65644-26260	77- - 1
65649-10600	77- - 2
65658-10601	77- - 1
	288- - 1
65658-10800	77- - 1
	288- - 1
65659-04100	77- - 2
	288- - 2
65660-10600	77- - 2
	288- - 2
65661-10601	288- - 2
65662-04100	77- - 2
	288- - 2
65663-04100	77- - 2
	288- - 2
65663-30001	77- - 2
	288- - 2
65666-10600	77- - 2
	288- - 2
65666-10800	77- - 2
	288- - 2
65710-10601	76- - 3
	287- - 3
65715-10600	76- - 3
65715-10601	287- - 3
65716-10600	76- - 3
	287- - 3
66103-10630	95- - 4
66103-10631	95- - 4
	306- - 7
66103-18430	306- - 7
66104-10630	95- - 4
66104-10631	95- - 4
	306- - 7
66104-18430	306- - 7
66174-01500	76- - 4
	81- - 8
	93- - 2

Printed in Japan

PART NO.	PAGE
	287- - 4
	292- -10
	304- - 2
66311-10630	95- - 6
	306- - 9
66312-10600	75- - 5
	286- - 5
66330-10650	75- - 5
	95- - 6
	286- - 5
	306- - 9
66400-10601	95- - 3
66400-13200	95- - 3
66400-13230	95- - 3
	306- - 6
66401-10600	95- - 3
66401-10601	95- - 3
66401-13230	95- - 3
	306- - 6
66501-10600	79- - 4
	290- - 4
66510-10600	79- - 4
	290- - 4
66513-10601	79- - 4
	290- - 4
66514-10600	79- - 4
	290- - 4
66515-10600	79- - 4
	290- - 4
66524-58000	93- - 2
	304- - 2
66569-32200	79- - 4
	290- - 4
66900-10604	80- - 2
66900-10605	80- - 2
66900-10606	80- - 2
66900-10607	80- - 3
66900-10608	80- - 2
66900-10609	80- - 2
66900-10610	80- - 2
66900-10611	80- - 3
66900-10808	80- - 3
66900-10809	80- - 3
66900-10810	80- - 3
66900-10811	80- - 3
66900-10812	80- - 3
66900-10813	80- - 4
66900-10814	80- - 4
66900-10815	80- - 4
66900-10816	80- - 3
66900-10817	80- - 3
66900-10818	80- - 3

Printed in Japan

PART NO.	PAGE	PART NO.	PAGE
66900-10819	80- - 3	66900-16501	291- - 2
66900-10820	80- - 4	66900-16502	291- - 3
66900-10821	80- - 4	66900-16503	291- - 3
66900-10822	80- - 4	66900-17000	291- - 4
66900-10823	80- - 4	66900-17001	291- - 4
66900-13200	80- - 2	66900-17002	291- - 5
	291- - 2	66900-17003	291- - 5
66900-13201	80- - 2	66900-18700	291- - 4
	291- - 2	66900-18701	291- - 4
66900-13202	80- - 3	66900-18702	291- - 5
	291- - 3	66900-18703	291- - 5
66900-13203	80- - 3	66900-24000	291- - 2
	291- - 3	66900-24001	291- - 2
66900-13300	80- - 3	66900-24002	291- - 3
	291- - 4	66900-24003	291- - 3
66900-13301	80- - 3	66901-10608	80- - 4
	291- - 4	66901-10609	80- - 4
66900-13302	80- - 3	66901-10610	80- - 4
	291- - 4	66901-10611	80- - 4
66900-13303	80- - 3	66901-10612	80- - 5
	291- - 5	66901-10613	80- - 5
66900-13900	291- - 5	66901-10614	80- - 5
66900-16000	291- - 6	66901-10615	80- - 5
66900-16001	291- - 6	66901-10616	80- - 4
66900-16002	291- - 5	66901-10617	80- - 4
66900-16500	291- - 2	66901-10618	80- - 4

Printed in Japan

PART NO.	PAGE	PART NO.	PAGE
66901-10619	80- - 5		291- - 5
66901-10620	80- - 5	66901-13303	80- - 6
66901-10621	80- - 5		291- - 5
66901-10622	80- - 5	66901-13900	291- - 6
66901-10623	80- - 5	66901-16000	291- - 6
66901-10804	80- - 5	66901-16001	291- - 6
66901-10805	80- - 5	66901-16002	291- - 6
66901-10806	80- - 5	66901-16500	291- - 2
66901-10807	80- - 6	66901-16501	291- - 3
66901-10808	80- - 5	66901-16502	291- - 3
66901-10809	80- - 5	66901-16503	291- - 3
66901-10810	80- - 6	66901-17000	291- - 4
66901-10811	80- - 6	66901-17001	291- - 4
66901-13200	80- - 4	66901-17002	291- - 5
	291- - 2	66901-17003	291- - 5
66901-13201	80- - 4	66901-18700	291- - 4
	291- - 2	66901-18701	291- - 4
66901-13202	80- - 4	66901-18702	291- - 5
	291- - 3	66901-18703	291- - 5
66901-13203	80- - 5	66901-24000	291- - 2
	291- - 3	66901-24001	291- - 3
66901-13300	80- - 5	66901-24002	291- - 3
	291- - 4	66901-24003	291- - 4
66901-13301	80- - 5	67103-10650	95- - 3
	291- - 4	67103-10850	95- - 3
66901-13302	80- - 6	67103-13250	95- - 3

Printed in Japan

PART NO.	PAGE	PART NO.	PAGE
67103-13950	95- - 3	67810-17000	287- - 3
67103-15830	306- - 6	67810-18701	287- - 3
67103-16530	306- - 5	67810-24000	287- - 3
67103-17030	306- - 6	67811-10600	76- - 3
67103-17130	306- - 6	67811-10800	76- - 3
67130-12100	76- - 4	67812-10600	76- - 3
67132-36720	76- - 4	67812-10800	76- - 4
67300-10630	95- - 2	67813-12400	76- - 4
67300-10830	95- - 2		287- - 3
67300-13230	95- - 2	67815-12400	76- - 4
67300-13930	95- - 3	67815-12401	287- - 4
67300-14330	95- - 2	67830-10600	79- - 5
67300-14430	95- - 3		290- - 6
67300-16530	306- - 5	67831-32200	76- - 4
67300-16730	306- - 5		287- - 4
67300-17030	306- - 5	67853-10600	76- - 3
67300-18430	306- - 5		287- - 3
67300-18730	306- - 5	67874-10600	76- - 4
67300-18731	306- - 5		287- - 4
67300-18931	306- - 5	67875-10600	76- - 4
67300-19430	306- - 5		287- - 4
67300-19431	306- - 5	67900-10600	80- - 1
67300-24030	306- - 5	67900-10800	80- - 1
67300-24530	306- - 5	67900-13300	80- - 1
67810-16500	284- - 3	67900-16500	291- - 1
	287- - 3	67900-17000	291- - 1

Printed in Japan

PART NO.	PAGE
67900-18700	291- - 1
67900-24500	291- - 1
67901-10600	80- - 1
67901-10800	80- - 1
67901-13200	80- - 1
67901-16500	291- - 1
67901-17000	291- - 1
67901-24000	291- - 1
67902-10600	80- - 1
	291- - 1
67905-10600	80- - 1
	291- - 1
67905-10800	80- - 1
	291- - 1
67906-10600	80- - 1
	291- - 1
67906-10800	80- - 1
	291- - 1
67907-10800	80- - 1
	291- - 1
67908-10600	80- - 1
	291- - 2
67908-10800	80- - 2
	291- - 2
67909-10600	80- - 2
	291- - 2
67909-10800	80- - 2
	291- - 2
67931-08700	80- - 1
	80- - 1
	291- - 1
	291- - 1
68100-10630	79- - 1
	95- - 7
	306- - 9
68100-10830	79- - 1
	95- - 7
	306- - 9
68100-13230	79- - 1
	290- - 1
68100-13930	79- - 1
	290- - 1
68143-16500	290- - 2
68228-10601	79- - 6
	290- - 6
68230-10600	290- - 1
68300-10600	290- - 1
68300-10850	290- - 1
68304-10600	79- - 1
68304-10800	79- - 1
68332-10600	79- - 6
	290- - 6

Printed in Japan

PART NO.	PAGE
68350-10600	79- - 1
	290- - 1
68350-10800	79- - 1
	290- - 1
68350-16500	290- - 1
68350-17000	290- - 1
68351-10600	79- - 2
	290- - 2
68351-10800	79- - 2
	290- - 2
68351-16500	290- - 2
68351-17000	290- - 2
68354-16500	290- - 2
68401-10600	79- - 2
68401-13200	79- - 2
	290- - 2
68401-13201	239- - 2
68600-10600	79- - 5
	290- - 6
68600-10800	79- - 6
	290- - 6
68601-10651	79- - 6
68601-10851	79- - 6
68601-13250	79- - 6
	290- - 6
68601-13350	79- - 6
	290- - 6
68608-10600	79- - 6
	290- - 6
68609-10600	79- - 6
	290- - 6
68630-10800	79- - 6
	98- - 2
	290- - 7
	310- - 1
	310- - 2
68630-11400	79- - 6
	98- - 1
	290- - 7
	310- - 1
68635-09400	79- - 6
	290- - 7
68643-00800	73- - 1
	73- - 4
	284- - 3
68643-04100	91- - 3
	302- - 6
68831-10600	79- - 2
68831-13200	79- - 2
	290- - 2
68835-10600	79- - 7
	290- - 7

Printed in Japan

PART NO.	PAGE
68860-10650	79- - 2
	290- - 2
68861-10650	79- - 3
	290- - 3
68861-10850	79- - 3
	290- - 3
68865-10600	79- - 2
	79- - 3
	290- - 2
	290- - 3
68866-10600	79- - 2
	79- - 3
	290- - 2
	290- - 3
68871-10600	79- - 3
	290- - 4
68875-10600	79- - 4
	290- - 4
68880-10600	79- - 4
	290- - 4

PART NO.	PAGE
70000	
72610-10600	78- - 1
	289- - 1
72610-11400	78- - 1
72610-13600	78- - 1
	289- - 1
	289- - 1
72610-19600	289- - 1
72613-10800	78- - 1
	289- - 1
72613-10801	78- - 1
	289- - 1
72613-11400	78- - 1
72810-11400	78- - 1
72810-13600	78- - 1
	289- - 1
72811-11400	78- - 1
72811-13600	78- - 1
	289- - 1
72812-11400	78- - 1
72812-13600	78- - 1
	289- - 1
72813-11400	78- - 1
72813-13600	78- - 1
	289- - 1

Printed in Japan

PART NO.	PAGE
72814-13600	78- - 2
	289- - 1
72815-13600	78- - 2
	289- - 1
72816-11400	78- - 1
	302- - 4
72816-13600	78- - 2
	289- - 1
72819-11400	78- - 2
72819-11401	78- - 2
	289- - 1
73102-10630	95- - 6
	306- - 9
73102-10900	95- - 7
	306- -10
73205-10901	306- -10
73206-10901	306- -10
73206-10930	95- - 7
73206-10931	95- - 7
73207-10901	306- -10
73207-10930	95- - 7
73207-10931	95- - 7
73209-10901	306- -10
73210-10600	95- - 6
	306- - 9
73222-10600	95- - 5
73222-10630	306- - 7
73223-10600	95- - 5
	306- - 7
73226-10930	95- - 8
73227-10930	95- - 8
73260-10950	95- - 9
73810-10900	75- - 4
	286- - 5
73810-11400	75- - 4
	286- - 4
73811-10600	75- - 4
73811-11400	75- - 4
	286- - 4
	286- - 5
73812-10600	75- - 4
73812-11400	75- - 4
	286- - 4
	286- - 5
73813-10900	75- - 4
	286- - 5
73813-11400	75- - 4
	286- - 4
73814-10900	75- - 4
	286- - 5
73814-11400	75- - 4
	286- - 4

Printed in Japan

PART NO.	PAGE
73815-10600	75- - 4
73815-11400	75- - 4
	286- - 5
	286- - 5
73901-10900	81- - 1
73910-10600	81- - 1
	292- - 1
73910-10900	292- - 1
73911-10600	81- - 1
	292- - 1
73911-24000	292- - 1
73912-10600	81- - 1
73912-10601	81- - 1
73912-10900	81- - 1
73912-10901	81- - 1
73912-10902	81- - 1
	292- - 1
73912-13200	292- - 1
73912-13600	81- - 1
	292- - 1
73912-17500	292- - 2
73912-19800	292- - 2
73912-24000	292- - 1
73912-24100	292- - 1
73913-10600	81- - 1
73913-10601	81- - 1
73913-10900	81- - 1
73913-10901	81- - 1
73913-10902	81- - 1
	292- - 2
73913-13200	292- - 2
73913-13600	81- - 1
	292- - 2
73913-17500	292- - 2
73913-19800	292- - 2
73913-24000	292- - 2
73913-24100	292- - 2
73914-10600	81- - 1
73914-10601	81- - 2
	81- - 2
73914-10900	81- - 2
73914-10901	81- - 2
73914-10902	81- - 2
	292- - 3
73914-13200	81- - 2
	292- - 2
73914-13600	81- - 2
	292- - 3
73914-17500	292- - 3
73914-19800	292- - 3
73914-24000	292- - 3
73914-24100	292- - 3

Printed in Japan

PART NO.	PAGE
73915-10600	81 - 2
73915-10601	81- - 2
73915-10901	81- - 2
73915-10902	81- - 2
	292- - 4
73915-13200	292- - 3
73915-13600	292- - 3
73915-17500	292- - 4
73915-19800	292- - 4
73915-24000	292- - 3
73915-24100	292- - 3
73916-10600	81- - 2
	292- - 4
73916-10900	81- - 2
	292- - 4
73916-16500	292- - 4
73916-17400	292- - 4
73916-18400	292- - 4
73916-19600	292- - 4
73918-10601	81- - 2
	93- - 4
	292- - 4
	292- - 7
	304- - 5
74310-10600	95- - 4
74310-15930	306- - 6
74310-16530	306- - 6
74310-17030	306- - 6
74311-10600	95- - 4
74311-16530	306- - 6
74311-17030	306- - 7
74320-10600	95- - 2
	95- - 9
74320-16530	306- - 4
74500-10600	95- - 1
74500-10800	95- - 1
74500-10902	95- - 7
	306- -10
74500-13201	95- - 1
74500-13901	95- - 1
74500-16530	306- - 1
74500-17030	306- - 1
74500-18430	306- - 1
74500-18730	306- - 1
74500-18731	306- - 1
74500-24650	306- -10
74507-10600	95- - 1
74507-16530	306- - 1
74507-18401	306- - 1
74720-03200	94- - 2
	305- - 2
74800-10630	95- - 2

Printed in Japan

PART NO.	PAGE	PART NO.	PAGE
74800-10650	95- - 1		95- - 9
74800-10800	95- - 9	74804-10630	306- - 1
74800-10850	95- - 1	74804-18430	306- - 1
74800-16531	306- - 2	74804-18830	306- - 1
74800-16730	306- - 2	74805-10600	95- - 1
74800-17031	306- - 2		95- - 9
74800-17330	306- - 2	74805-10630	306- - 2
74800-18830	306- - 2	74805-18430	306- - 2
74800-18930	306- - 3	74805-18830	306- - 2
74800-24530	306- - 3	74835-10600	95- - 2
74801-10630	95- - 2		306- - 3
74801-16530	306- - 3	74836-10600	95- - 2
74801-16930	306- - 3		306- - 3
74801-17030	306- - 3	74853-10650	95- - 1
74801-18830	306- - 3		306- - 2
74801-18930	306- - 3	74854-10650	95- - 1
74801-24530	306- - 3		306- - 2
74802-10630	95- - 2	74856-10600	95- - 1
74802-16530	306- - 3		306- - 1
74802-16730	306- - 3	74856-18400	306- - 1
74802-17030	306- - 3	74860-10600	95- - 2
74802-17330	306- - 3		95- - 9
74802-18830	306- - 3		306- - 3
74802-18930	306- - 3	74870-10600	95- - 1
74802-24530	306- - 3		306- - 2
74804-10600	95- - 1	74870-18400	306- - 2

Printed in Japan

PART NO.	PAGE	PART NO.	PAGE
74870-18800	306- - 2	74902-11803	82- - 4
74873-10600	95- - 1	74902-12400	83- - 1
	306- - 2	74902-12402	83- - 1
74873-18400	306- - 2	74902-12403	83- - 1
74873-18800	306- - 2	74902-12404	83- - 1
74890-10600	95- - 2	74902-12405	83- - 1
	306- - 4	74902-12500	83- - 1
74891-10600	95- - 2	74902-12502	83- - 2
	306- - 4	74902-12503	83- - 2
74902-10600	82- - 1	74902-12504	83- - 2
74902-10800	82- - 1	74902-12505	83- - 2
74902-10802	82- - 2	74902-13200	82- - 1
74902-10803	82- - 2	74902-13300	82- - 1
74902-10804	82- - 2	74902-13302	82- - 2
74902-10805	82- - 2	74902-13303	82- - 2
74902-10806	82- - 3	74902-13304	82- - 2
74902-10807	82- - 3	74902-13305	82- - 2
74902-10808	82- - 3	74902-13306	82- - 3
74902-10809	82- - 3	74902-13307	82- - 3
74902-11400	82- - 1	74902-13308	82- - 3
74902-11401	82- - 1	74902-13309	82- - 3
74902-11402	82- - 1	74902-13600	82- - 1
74902-11403	82- - 2	74902-13601	82- - 1
74902-11800	82- - 3	74902-13602	82- - 1
74902-11801	82- - 3	74902-13603	82- - 2
74902-11802	82- - 4	74902-14000	82- - 3

Printed in Japan

PART NO.	PAGE
74902-14001	82- - 4
74902-14002	82- - 4
74902-14003	82- - 4
74902-14300	83- - 1
74902-14302	83- - 1
74902-14303	83- - 1
74902-14304	83- - 1
74902-14305	83- - 2
74902-14400	83- - 1
74902-14402	83- - 2
74902-14403	83- - 2
74902-14404	83- - 2
74902-14405	83- - 2
74902-15802	294- - 7
74902-16500	293- - 1
	294- - 1
74902-16608	293- - 1
	294- - 1
74902-16609	293- - 1
	294- - 1
74902-16610	293- - 1
	294- - 1
74902-16611	293- - 1
	294- - 1
74902-16612	293- - 1
	294- - 2
74902-16613	293- - 1
	294- - 2
74902-16614	293- - 2
	294- - 2
74902-16615	293- - 2
	294- - 2
74902-16900	294- - 4
74902-16901	294- - 5
74902-16910	294- - 4
74902-16911	294- - 4
74902-16912	294- - 4
74902-16913	294- - 4
74902-16914	294- - 5
74902-16915	294- - 5
74902-16916	294- - 5
74902-16917	294- - 5
74902-16918	293- - 3
74902-16919	293- - 3
74902-16920	293- - 3
74902-16921	293- - 4
74902-16922	293- - 4
74902-16923	293- - 4
74902-16924	293- - 4
74902-16925	293- - 4
74902-16946	293- - 3
74902-16947	293- - 4

Printed in Japan

PART NO.	PAGE	PART NO.	PAGE
74902-17000	293- - 2	74902-17114	294- - 6
	294- - 2	74902-17115	294- - 6
74902-17001	293- - 3	74902-17116	294- - 6
	294- - 3	74902-17117	294- - 7
74902-17011	293- - 2	74902-17118	294- - 7
	294- - 2	74902-17119	294- - 7
74902-17012	293- - 2	74902-17120	293- - 4
	294- - 3	74902-17121	293- - 5
74902-17013	293- - 2	74902-17122	293- - 5
	294- - 3	74902-17123	293- - 5
74902-17014	293- - 2	74902-17124	293- - 5
	294- - 3	74902-17125	293- - 5
74902-17015	293- - 3	74902-17126	293- - 5
	294- - 3	74902-17127	293- - 5
74902-17016	293- - 3	74902-17128	293- - 6
	294- - 3	74902-17129	293- - 5
74902-17017	293- - 3	74902-17131	293- - 5
	294- - 3	74902-17146	293- - 4
74902-17018	293- - 3	74902-17206	294- - 7
	294- - 4	74902-17207	294- - 7
74902-17020	293- - 2	74902-17900	293- - 1
74902-17100	294- - 5		294- - 1
74902-17101	294- - 6	74902-18700	295- - 3
74902-17111	294- - 5	74902-18701	295- - 4
74902-17112	294- - 6	74902-18702	295- - 8
74902-17113	294- - 6		295- - 9

Printed in Japan

PART NO.	PAGE
74902-18703	295- -11
74902-18705	295- - 3
74902-18706	295- - 3
74902-18707	295- - 3
74902-18708	295- - 3
74902-18709	295- - 4
74902-18710	295- - 4
74902-18711	295- - 4
74902-18712	295- - 4
74902-18713	295- - 4
74902-18714	295- - 5
74902-18715	295- - 8
74902-18716	295- - 5
74902-18717	295- - 9
74902-18718	295- - 9
74902-18719	295- - 9
74902-18720	295- - 9
	295- -11
74902-18721	295- - 9
74902-18722	295- -10
74902-18723	295- -10
74902-18724	295- -10
	295- -12
74902-18725	295- - 5
74902-18726	295- - 5
74902-18727	295- - 5
74902-18728	295- - 5
74902-18729	295- - 5
74902-18730	295- -10
	295- -12
74902-18731	295- -10
	295- -12
74902-18732	295- -10
	295- -12
74902-18733	295- -10
	295- -12
74902-18734	295- -11
	295- -12
74902-18800	295- - 7
74902-19100	295- - 5
74902-19101	295- - 6
74902-19102	295- - 6
74902-19103	295- - 6
74902-19104	295- - 6
74902-19105	295- - 6
74902-19401	295- - 6
74902-19402	295- - 7
74902-19403	295- - 7
74902-19404	295- - 7
74902-19405	295- - 7
74902-19406	295- - 8
74902-19407	295- - 8

Printed in Japan

PART NO.	PAGE
74902-19408	295- - 8
74902-24000	295- - 1
74902-24100	295- - 1
74902-24101	295- - 1
74902-24102	295- - 1
74902-24103	295- - 1
74902-24104	295- - 2
74902-24105	295- - 2
74902-24106	295- - 2
74902-24107	295- - 2
74902-24300	295- - 1
74902-24400	295- - 2
74902-24401	295- - 2
74902-24402	295- - 3
74902-24403	295- - 3
74902-24500	295- -11
74902-24501	295- -11
74902-24502	295- -11
74902-24503	295- -11
74902-24504	295- -11
74907-10600	82- - 4
	83- - 1
74907-11100	82- - 4
	293- - 1
	294- - 2
74907-11101	82- - 4
	293- - 3
	293- - 4
	293- - 5
	294- - 3
	294- - 5
	294- - 6
74907-11400	82- - 4
	83- - 2
74907-11401	82- - 4
	83- - 2
74907-11402	82- - 4
	83- - 2
74907-11403	82- - 5
	83- - 2
74907-11501	82- - 5
74907-11800	82- - 5
	83- - 3
74907-11801	82- - 5
	83- - 3
74907-11802	82- - 5
	83- - 3
74907-11803	82- - 5
	83- - 3
74907-13200	82- - 4
	293- - 1
	293- - 2

Printed in Japan

PART NO.	PAGE
	293- - 3
	293- - 4
	294- - 1
	294- - 2
	294- - 4
	294- - 5
74907-13600	82- - 4
	83- - 2
74907-13601	82- - 4
	83- - 2
74907-13602	82- - 5
	83- - 2
74907-13603	82- - 5
	83- - 2
74907-13900	294- - 7
74907-14000	82- - 5
	83- - 3
74907-14001	82- - 5
	83- - 3
74907-14002	82- - 5
	83- - 3
74907-14003	82- - 5
	83- - 3
74907-15800	295- - 5
	295- - 7
	295- - 9
	295- -10
	295- -11
	295- -12
74907-15801	295- - 5
	295- -11
	295- -11
	295- -12
74907-16600	293- - 1
	293- - 2
	293- - 3
	293- - 4
	294- - 1
	294- - 2
	294- - 4
	294- - 6
	295- - 1
	295- - 3
	295- - 6
	295- - 8
74907-16601	293- - 1
	293- - 2
	293- - 3
	293- - 5
	294- - 1
	294- - 3
	294- - 4

Printed in Japan

PART NO.	PAGE
	294- - 6
	295- - 1
	295- - 3
	295- - 6
74907-16602	293- - 1
	293- - 2
	293- - 4
	293- - 5
	294- - 1
	294- - 3
	294- - 4
	294- - 6
	295- - 1
	295- - 3
	295- - 6
	295- - 9
	295- - 9
74907-16603	293- - 1
	293- - 2
	293- - 4
	293- - 5
	294- - 1
	294- - 3
	294- - 4
	294- - 6
74907-16604	293- - 1
	293- - 3
	293- - 4
	293- - 5
	294- - 2
	294- - 3
	294- - 5
	294- - 6
	294- - 7
	295- - 2
	295- - 4
	295- - 6
	295- - 9
	295- -11
	295- -12
74907-16605	293- - 2
	293- - 3
	293- - 4
	293- - 5
	294- - 2
	294- - 3
	294- - 5
	294- - 6
	294- - 7
	295- - 2
	295- - 4
	295- - 7

Printed in Japan

PART NO.	PAGE
	.....295- - 9
74907-16606	.....293- - 2
	.....293- - 3
	.....293- - 4
	.....293- - 5
	.....294- - 2
	.....294- - 4
	.....294- - 5
	.....294- - 7
	.....294- - 7
	.....295- - 2
	.....295- - 4
	.....295- - 7
	.....295- -10
74907-16607	.....293- - 2
	.....293- - 3
	.....293- - 4
	.....293- - 6
	.....294- - 2
	.....294- - 4
	.....294- - 5
	.....294- - 7
74907-17000	.....293- - 2
	.....293- - 5
	.....293- - 6
	.....295- - 4
74907-17900	.....295- - 2
	.....295- - 5
	.....295- - 7
	.....295- -10
	.....295- -11
	.....295- -12
74907-17901	.....295- - 2
	.....295- - 5
	.....295- - 8
	.....295- -10
	.....295- -12
74907-17902	.....295- - 3
	.....295- - 5
	.....295- - 8
	.....295- -10
	.....295- -12
74907-17903	.....295- - 3
74907-24000	.....295- - 1
	.....295- - 3
	.....295- - 6
	.....295- - 8
74907-24100	.....295- - 1
	.....295- - 4
	.....295- - 6
	.....295- - 9
74907-24101	.....295- - 2

Printed in Japan

PART NO.	PAGE
	295- - 4
	295- - 7
	295- -10
74907-24300	295- - 2
	295- - 4
	295- - 6
	295- - 9
	295- -11
	295- -11
74907-24400	295- - 5
	295- - 8
	295- -11
	295- -12
74910-10800	82- - 5
74910-12400	83- - 3
74910-16500	295- -12
74911-10600	82- - 5
74911-12400	83- - 3
74911-16500	295- -13
74912-10600	82- - 5
74912-16500	295- -13
74913-10600	82- - 5
	295- -13
74914-10600	82- - 5
	295- -13
74915-10600	82- - 6
74915-15800	295- -13
74915-16500	295- -13
74920-10800	80- - 2
74920-10900	96- - 3
74920-10901	96- - 3
	309- - 4
74920-12400	83- - 3
74920-16601	295- -13
74920-16901	295- -13
74920-17400	309- - 4
74921-10600	80- - 2
74921-12400	83- - 3
74921-16601	295- -13
74921-16901	295- -14
74922-10600	80- - 2
74922-15801	295- -14
74922-16601	295- -14
74923-10600	82- - 6
74923-16500	295- -14
74924-10600	82- - 6
74924-16500	295- -14
74925-10600	82- - 6
74925-16600	295- -14
74926-16600	295- -14
74927-10900	94- - 1
	305- - 1

Printed in Japan

PART NO.	PAGE
74933-30000	80- - 2
	82- - 6
	291- - 2
74939-12400	83- - 3
	295- -13
74942-04100	82- - 6
	83- - 3
	295- -13
74942-09500	82- - 6
74942-10900	82- - 6
	83- - 3
	94- - 2
	295- -13
	305- - 2
74950-10901	94- - 1
	305- - 1
74950-13900	295- -14
74950-15800	295- -14
74950-24000	295- -14
74950-24001	295- -14
74950-24002	295- -14
74950-24003	295- -14
74951-13900	295- -15
74951-15800	295- -15
74951-24000	295- -14
74951-24001	295- -14
74951-24002	295- -15
74951-24003	295- -15
74952-13900	295- -15
74952-15800	295- -15
74952-24000	295- -15
74952-24001	295- -15
74952-24002	295- -15
74952-24003	295- -15
74953-13900	295- -16
74953-15800	295- -16
74953-24000	295- -15
74953-24001	295- -15
74953-24002	295- -15
74953-24003	295- -16
74954-13900	295- -16
74954-15800	295- -16
74954-24000	295- -16
74954-24001	295- -16
74954-24002	295- -16
74954-24003	295- -16
74955-13900	295- -17
74955-15800	295- -17
74955-24000	295- -16
74955-24001	295- -16
74955-24002	295- -16
74955-24003	295- -16

Printed in Japan

PART NO.	PAGE
74958-13900	295- -17
74958-15800	295- -17
74958-24000	295- -17
74958-24001	295- -17
74958-24002	295- -17
74958-24003	295- -17
74962-15800	295- -13
74963-15800	261- - 3
	295- -13
74968-10900	94- - 1
	305- - 1
74970-10900	94- - 1
	305- - 1
74971-10900	94- - 1
	305- - 1
74986-10900	94- - 1
	305- - 1
74990-10900	94- - 1
	305- - 1
74992-10900	94- - 1
	305- - 1
74993-10900	94- - 1
	305- - 1
76100-10930	95- - 8
76101-10930	95- - 8
76110-10600	95- - 4
76110-10601	95- - 4
	306- - 7
76111-10600	95- - 4
76111-10601	95- - 4
	306- - 7
76202-10930	95- - 8
76213-10930	95- - 8
76214-10930	95- - 9
76221-10930	95- - 8
76224-10930	95- - 8
76225-10930	95- - 8
76290-10900	93- - 4
76290-10901	93- - 4
76290-10902	93- - 5
76290-10903	93- - 4
	93- - 5
	93- - 5
	304- - 5
76290-19600	304- - 5
76291-10900	93- - 5
76291-10901	93- - 5
76291-10902	93- - 5
76291-10903	93- - 5
	93- - 5
	93- - 5
	304- - 6

Printed in Japan

PART NO.	PAGE
76291-17400	304- - 6
76291-19600	304- - 6
76349-10930	95- - 8
76350-10930	95- - 8
76400-10630	75- - 4
	95- - 4
76401-10630	75- - 4
	95- - 4
76404-10631	286- - 4
	306- - 6
76405-10631	286- - 4
	306- - 6
76482-10651	75- - 5
	286- - 5
76500-10630	95- - 5
76500-10631	95- - 5
	306- - 7
76501-10630	95- - 5
76501-10631	95- - 5
	306- - 7
76506-10601	306- - 7
76507-10601	306- - 7
76512-10600	95- - 5
76512-10601	95- - 5
76512-10631	306- - 7
76512-19101	306- - 7
76513-10600	95- - 5
76513-10601	95- - 5
76513-10631	306- - 7
76513-19101	306- - 7
76602-10630	95- - 6
	306- - 9
76602-12410	95- - 6
	306- - 9
76603-10630	95- - 6
	306- - 9
76603-12410	95- - 6
	306- - 9
76606-10930	95- - 7
	306- -10
76607-10930	95- - 7
	306- -10
76608-10930	95- - 7
	306- -10
76609-10930	95- - 7
	306- -10
76610-10600	95- - 6
	306- - 9
76610-10930	95- - 8
76610-18400	306- - [illegible]
76611-10600	95- - 6
76611-10930	95- - 8

PART NO.	PAGE
76611-18400	306- - 9
76690-10900	93- - 4
	304- - 4
76690-10901	93- - 4
	304- - 5
76690-10902	93- - 4
	304- - 5
76690-10903	304- - 5
76690-17400	304- - 5
76690-19600	304- - 5
76691-10900	93- - 4
	304- - 5
76691-10901	93- - 4
	304- - 5
76691-10902	93- - 4
	304- - 5
76691-10903	304- - 5
76691-17400	304- - 5
76691-19600	304- - 5
76704-10600	95- - 6
76704-10601	95- - 6
	306- - 8
76704-10930	95- - 7
76704-10931	95- - 7
	306- -10
76705-10600	95- - 6
76705-10601	95- - 6
	306- - 8
76705-10930	95- - 7
76705-10931	95- - 7
	306- -10
76708-10600	95- - 6
	306- - 8
76708-18400	306- - 8
76709-10600	95- - 6
	306- - 9
76709-18400	306- - 9
76720-10600	95- - 5
	306- - 8
76720-10900	95- - 9
76720-18400	306- - 8
76721-10600	95- - 6
	95- - 9
	306- - 8
76721-18400	306- - 8
76750-10930	95- - 8
76750-10931	95- - 8
76751-10930	95- - 8
76751-10931	95- - 8
76752-10630	95- - 5
	306- - 8
76753-10630	95- - 5

Printed in Japan

PART NO.	PAGE
.....	306- - 8
76800-10600.....	85- - 4
76800-10601.....	85- - 4
76800-10603.....	85- - 4
76800-10604.....	85- - 4
.....	297- - 3
76800-24000.....	297- - 3
76801-10600.....	85- - 4
76801-10601.....	85- - 4
76801-10603.....	85- - 4
76801-10604.....	85- - 4
.....	297- - 3
76801-24000.....	297- - 4
76802-10600.....	88- - 3
76802-10601.....	88- - 3
76802-10603.....	88- - 3
76802-10604.....	88- - 3
.....	300- - 6
76802-10902.....	88- - 4
76802-10903.....	88- - 4
.....	300- - 6
76802-24000.....	300- - 6
76803-10600.....	88- - 4
76803-10601.....	88- - 4
76803-10603.....	88- - 4
76803-10604.....	88- - 4
.....	300- - 6
76803-10902.....	88- - 4
76803-10903.....	88- - 4
.....	300- - 6
76803-24000.....	300- - 6
76805-10601.....	88- - 4
76805-10902.....	93- - 6
76805-10903.....	93- - 6
.....	304- - 6
76806-10900.....	93- - 1
76806-11000.....	93- - 1
.....	304- - 1
76806-11001.....	93- - 1
.....	304- - 1
76807-10900.....	93- - 1
.....	304- - 1
76807-10901.....	304- - 1
76808-10900.....	93- - 1
.....	304- - 1
76808-10901.....	304- - 1
76809-10900.....	93- - 1
.....	304- - 1
76810-10900.....	93- - 1
.....	304- - 1
76811-10900.....	93- - 1
.....	304- - 1

Printed in Japan

PART NO.	PAGE
76812-10900	93- - 1
	304- - 1
76813-10900	93- - 1
	304- - 1
76813-11000	93- - 4
	304- - 4
76814-10900	93- - 1
	304- - 2
76814-11000	93- - 4
	304- - 4
76815-10900	93- - 1
	304- - 1
76816-10900	93- - 1
	304- - 2
76817-10900	93- - 1
	304- - 1
76818-10900	93- - 1
	304- - 2
76820-10900	93- - 4
76820-10901	93- - 4
	304- - 4
76821-10900	93- - 4
76821-10901	93- - 4
	304- - 4
76882-12410	75- - 4
	286- - 4
76882-15800	286- - 4
76883-12410	75- - 4
	286- - 4
76883-15800	286- - 4
76901-10900	93- - 5
76901-10901	93- - 5
76901-10902	93- - 6
76901-10903	93- - 5
	304- - 6
76901-10904	93- - 6
	304- - 6
76901-11000	93- - 6
	304- - 6
76902-10900	93- - 6
76902-10901	93- - 6
76902-10902	93- - 6
76902-10903	93- - 6
	304- - 6
76902-10904	93- - 6
	304- - 6
76902-11000	93- - 6
	304- - 6
76905-10600	81- - 3
76905-10601	81- - 3
76905-10602	81- - 3
76905-10906	292- - 5

Printed in Japan

PART NO.	PAGE	PART NO.	PAGE
76905-10907	292- - 5	76906-18402	292- - 5
76905-10908	292- - 6	76906-18800	292- - 5
76905-11002	292- - 6	76906-18801	292- - 5
76905-13200	81- - 3	76911-10600	81- - 3
76905-13201	81- - 3	76911-10900	93- - 6
76905-13203	81- - 3		304- - 6
76905-17501	292- - 6	76911-13200	81- - 3
76905-18400	292- - 5		292- - 6
76905-18401	292- - 5	76912-10600	81- - 3
76905-18402	292- - 5	76912-10900	93- - 6
76905-18801	292- - 5		304- - 6
76905-18802	292- - 5	76912-13200	81- - 3
76905-18803	292- - 5		292- - 6
76906-10600	81- - 3	76915-30000	93- - 2
76906-10601	81- - 3	76916-00100	82- - 6
76906-10602	81- - 3		93- - 2
76906-10906	292- - 5		304- - 3
76906-10907	292- - 6	76920-17400	304- - 5
76906-10908	292- - 6	76921-10600	81- - 4
76906-11002	292- - 6	76921-10601	81- - 4
76906-13200	81- - 3	76921-10602	81- - 4
76906-13201	81- - 3	76921-10603	81- - 4
76906-13203	81- - 3	76921-10608	81- - 4
76906-17501	292- - 6	76921-10609	81- - 4
76906-18400	292- - 5	76921-10610	81- - 4
76906-18401	292- - 5	76921-10611	81- - 4

Printed in Japan

PART NO.	PAGE	PART NO.	PAGE
76921-13200	81- - 4	76931-10600	81- - 6
76921-13201	81- - 4		292- - 9
76921-13203	81- - 4	76932-10600	81- - 7
76921-13204	81- - 4		292- - 9
	81- - 4	76933-10600	81- - 7
	81- - 4	76933-10601	81- - 7
	81- - 4		292- - 9
	292- - 6	76934-10600	81- - 7
76921-24000	292- - 6	76934-10601	81- - 7
76922-10600	81- - 4		292- - 9
76922-10601	81- - 5	76935-10600	81- - 7
76922-10602	81- - 5		292- - 9
76922-10603	81- - 5	76936-10600	81- - 7
76922-10608	81- - 4		292- - 9
76922-10609	81- - 5	76937-10600	81- - 7
76922-10610	81- - 5	76937-10601	81- - 7
76922-10611	81- - 5		292- - 9
76922-13200	81- - 5	76939-10600	81- - 7
76922-13201	81- - 5	76939-10601	81- - 7
76922-13203	81- - 5	76939-10602	292- - 9
76922-13204	81- - 5	76940-10600	81- - 7
	81- - 5	76940-10601	81- - 7
	81- - 5	76940-10602	292- - 9
	81- - 5	76941-10600	81- - 8
	292- - 6	76941-10601	81- - 8
76922-24000	292- - 7		292- - 9

Printed in Japan

PART NO.	PAGE
76941-10901	81- - 8
	292- - 9
76941-10902	292- -10
76942-10600	81- - 8
76942-10601	81- - 8
	292- - 9
76942-10901	81- - 8
	292- -10
76942-10902	292- -10
76945-10600	81- - 8
	292- -10
76946-10600	81- - 8
	292- -10
78100-10630	90- - 1
	95- - 5
	302- - 1
	306- - 8
78100-10930	90- - 1
	95- - 9
	302- - 1
78100-18430	302- - 1
	306- - 8
78100-19600	302- - 1
78100-19800	302- - 1
78101-10630	90- - 1
	95- - 5
	302- - 1
	306- - 8
78101-10930	90- - 1
	95- - 9
	302- - 1
78101-18430	302- - 1
78101-19600	302- - 1
78101-19800	302- - 1
78104-10600	95- - 5
	306- - 8
78105-10600	95- - 5
	306- - 8
79100-10630	91- - 3
	95- - 7
	302- - 7
	306- -10
79100-10930	93- - 2
	304- - 2
79100-18430	302- - 7
	306- -10
79100-19600	304- - 2
79101-10930	95- - 9
79105-10900	93- - 2
79106-10900	304- - 3
79109-10630	91- - 3
	95- - 7

Printed in Japan

PART NO.	PAGE
79109-18430	302- - 7
	306- -10
79110-10630	302- - 7
	306- - 9
79110-10930	95- - 9
79402-10600	95- - 1
	306- - 1
79402-18400	306- - 1
79704-10600	95- - 6
	306- - 9
79710-10600	90- - 3
79710-11400	90- - 3
79710-13600	90- - 3
	302- - 3
79713-10800	78- - 2
	302- - 3
79713-10801	78- - 2
	302- - 3
79810-13600	302- - 3
79811-13600	302- - 4
79812-13600	302- - 4
79813-13600	302- - 4
79815-13600	302- - 4
79816-13600	302- - 4
79910-10600	81- - 5
79910-10601	81- - 5
79910-10602	81- - 6
79910-11400	81- - 6
79910-11401	81- - 6
79910-11402	81- - 6
79910-11403	81- - 6
79910-11404	81- - 6
79910-11405	81- - 6
79910-11600	81- - 6
79910-13200	81- - 5
	292- - 7
79910-13201	81- - 5
	292- - 7
79910-13203	81- - 6
	292- - 7
79910-13604	292- - 7
79910-13605	81- - 6
	292- - 7
79910-13606	81- - 6
	292- - 7
79910-13900	292- - 7
79910-16500	292- - 7
79910-16501	292- - 7
79910-16502	292- - 8
79910-16600	292- - 8
79910-16601	292- - 8
79910-16602	292- - 8

Printed in Japan

PART NO.	PAGE
79910-17000	292- - 8
79910-17001	292- - 8
79910-18800	292- - 8
79910-18801	292- - 8
79910-24000	292- - 8
79910-24001	292- - 8
79910-24002	292- - 8
79910-24003	292- - 8
79915-10600	81- - 6
	292- - 9
79930-10600	91- - 4
	292- - 9
	302- - 9

PART NO.	PAGE
80000	
80010-10801	98- - 1
80010-10802	98- - 1
80010-10803	98- - 1
	310- - 1
80010-10804	98- - 2
	310- - 1
80010-10900	310- - 2
80010-11000	98- - 2
	310- - 2
80010-11400	98- - 1
80010-11401	98- - 1
	310- - 1
80010-18400	310- - 1
80010-18700	310- - 1
80010-19800	310- - 2
80010-19801	310- - 2
80010-24600	310- - 3
80010-24601	310- - 3
80100-10630	84- - 1
80100-10631	84- - 1
	296- - 1
80101-10630	84- - 1
80101-10631	84- - 1
	296- - 1

Printed in Japan

PART NO.	PAGE
80206-10600	84- - 3
	296- - 3
80207-10600	84- - 3
	296- - 3
80212-11400	84- - 1
	296- - 1
80212-18500	296- - 1
80213-11400	84- - 1
	296- - 1
80213-18500	296- - 1
80214-18500	296- - 1
80215-18500	296- - 1
80220-10600	84- - 2
80220-10601	84- - 2
	296- - 2
80221-10600	84- - 2
80221-10601	84- - 2
	296- - 2
80233-10600	84- - 3
	296- - 3
80241-10600	84- - 3
80241-10601	84- - 3
	296- - 3
80242-10600	84- - 3
80242-10601	84- - 3
	296- - 3
80243-10600	84- - 3
	296- - 3
80244-10600	84- - 3
	296- - 3
80247-32200	84- - 4
	296- - 3
80250-10600	84- - 2
80250-10601	84- - 2
	296- - 2
80251-10600	84- - 2
80251-10601	84- - 2
	296- - 2
80255-10600	84- - 2
80255-10601	84- - 2
	296- - 2
80255-10800	84- - 3
80255-10801	84- - 3
80255-10802	84- - 3
	296- - 2
80255-10803	84- - 3
	296- - 2
80255-11400	84- - 2
80255-11401	84- - 2
	296- - 2
80256-10600	84- - 3
	296- - 2

Printed in Japan

PART NO.	PAGE
80256-24000	296- - 3
80257-10600	84- - 3
	296- - 3
80257-24000	296- - 3
80263-10600	84- - 2
	296- - 2
80270-10600	84- - 1
80270-10601	84- - 1
	296- - 2
80271-10600	84- - 2
80271-10601	84- - 2
	296- - 2
80285-10600	84- - 3
	296- - 2
80295-10600	84- - 3
	296- - 3
80302-10600	84- - 4
	296- - 3
80303-10600	84- - 4
	296- - 3
80308-10600	84- - 4
80308-10800	84- - 4
	296- - 4
80308-10801	84- - 4
	296- - 4
80308-11400	84- - 4
80312-10600	84- - 1
	296- - 4
80315-10650	84- - 4
	87- - 4
	296- - 4
	299- - 4
80320-10600	84- - 4
80320-10601	84- - 4
	296- - 4
80335-10600	84- - 4
	296- - 4
80336-10600	84- - 4
	296- - 4
80336-16500	296- - 4
80337-10600	84- - 5
	296- - 4
80400-10600	84- - 1
	296- - 1
80402-10600	84- -
	296- -
80403-10600	296- -
80410-10600	84- - 4
	296- - 4
80410-16500	296- - 4
80451-10600	87- - 4
	299-

PART NO.	PAGE
80500-10600	86- - 1
80500-10601	86- - 1
	298- - 1
80501-10600	86- - 1
80501-10601	86- - 1
	298- - 1
80502-10600	86- - 1
80502-10601	86- - 1
80502-10602	86- - 1
	298- - 1
80503-10600	86- - 1
80503-10601	86- - 1
80503-10602	86- - 1
	298- - 1
80504-10600	86- - 1
80504-10601	86- - 1
	298- - 1
80505-10600	86- - 1
80505-10601	86- - 1
	298- - 1
80570-10600	86- - 2
	89- - 1
80570-10602	86- - 2
	89- - 1
	298- - 1
	301- - 2
80570-10901	298- - 1
	301- - 2
80571-10600	86- - 2
	89- - 2
80571-10602	86- - 2
	89- - 2
	298- - 1
	301- - 2
80571-10901	298- - 1
	301- - 2
80585-35000	86- - 2
	86- - 3
	89- - 2
	298- - 1
	298- - 3
	301- - 2
80590-10600	91- - 1
	98- - 1
	302- - 4
	310- - 1
	310- - 2
	310- - 3
80590-10601	79- - 6
	86- - 3
	91- - 3
	93- - 3

Printed in Japan

PART NO.	PAGE
	98- - 1
	98- - 1
	98- - 2
	98- - 2
	98- - 2
	290- - 7
	298- - 3
	302- - 6
	304- - 3
	310- - 1
	310- - 2
	310- - 2
	310- - 3
80595-18400	301- - 1
80595-18402	301- - 1
80595-18403	301- - 1
80595-36700	89- - 1
	301- - 1
80600-10600	86- - 3
	98- - 1
	98- - 2
	98- - 2
	298- - 3
	310- - 1
	310- - 2
	310- - 2
	310- - 3
80600-18400	298- - 3
	310- - 2
	310- - 3
	310- - 3
80601-10600	86- - 3
	98- - 1
	98- - 2
	98- - 2
	298- - 3
	310- - 1
	310- - 2
	310- - 2
	310- - 3
80601-18400	298- - 3
	310- - 2
	310- - 3
	310- - 3
80605-10601	86- - 2
80605-10602	86- - 2
	298- - 2
80606-10601	86- - 2
80606-10602	86- - 3
	298- - 2
80610-10600	98- - 2
	98- - 2

Printed in Japan

PART NO.	PAGE
80610-11400	98- - 1
	98- - 2
80630-10600	89- - 2
	301- - 2
80630-10601	86- - 2
	298- - 2
80631-10600	86- - 2
	298- - 2
80672-32200	86- - 3
	89- - 2
	298- - 2
	301- - 2
80672-73000	301- - 3
80673-32200	86- - 3
	89- - 2
	298- - 3
	301- - 3
80674-10600	86- - 3
	89- - 2
80674-10601	86- - 3
	89- - 2
	298- - 3
	301- - 3
80675-10600	86- - 3
	89- - 2
	298- - 2
	298- - 2
80675-18400	298- - 2
	301- - 3
80676-10400	86- - 3
	89- - 2
	298- - 2
	298- - 3
	301- - 3
	301- - 3
80691-26261	85- - 1
	88- - 1
	297- - 1
	300- - 1
80700-10600	86- - 3
	298- - 3
80700-18400	298- - 3
80701-10600	86- - 3
	298- - 3
80701-18400	298- - 3
80760-10600	86- - 3
	89- - 2
	298- - 2
	301- - 2
80760-73000	298- - 2

Printed in Japan

PART NO.	PAGE
	301- - 2
80761-18400	298- - 2
	301- - 3
80900-11400	85- - 1
80900-11401	85- - 2
80900-11402	85- - 2
80900-11403	85- - 2
80900-11404	85- - 1
80900-11405	85- - 2
80900-11406	85- - 2
80900-11407	85- - 2
	297- - 3
80900-11600	85- - 1
80900-11601	85- - 3
80900-11602	85- - 3
80900-11603	85- - 3
80900-11604	85- - 2
	297- - 2
80900-11605	85- - 3
	297- - 3
80900-11606	85- - 3
	297- - 3
80900-11607	85- - 3
	297- - 3
80900-13604	297- - 1
80900-13605	297- - 2
80900-13606	297- - 3
80900-13900	297- - 1
80900-17000	297- - 1
80900-18700	297- - 2
80900-18701	297- - 2
80900-19100	297- - 1
80900-19101	297- - 2
80900-19102	297- - 2
80900-19103	297- - 2
80901-11400	85- - 1
80901-11401	85- - 2
80901-11402	85- - 2
80901-11403	85- - 3
80901-11404	85- - 1
80901-11405	85- - 2
80901-11406	85- - 2
80901-11407	85- - 3
	297- - 3
80901-11600	85- - 2
80901-11601	85- - 3
80901-11602	85- - 3
80901-11603	85- - 3
80901-11604	85- - 2
	297- - 2
80901-11605	85- - 3
	297- - 3

Printed in Japan

PART NO.	PAGE
80901-11606	85- - 3
	297- - 3
80901-11607	85- - 3
	297- - 3
80901-13604	297- - 1
80901-13605	297- - 3
80901-13606	297- - 3
80901-13900	297- - 1
80901-17000	297- - 1
80901-18700	297- - 2
80901-18701	297- - 2
80901-19100	297- - 1
80901-19101	297- - 2
80901-19102	297- - 2
80901-19103	297- - 2
80919-32200	81- - 6
	85- - 1
	93- - 2
	93- - 6
	292- - 8
	297- - 2
	300- - 6
	304- - 3
	304- - 6
80929-32200	84- - 5
	87- - 5
	296- - 4
	299- - 4
80940-11400	85- - 3
	297- - 3
	300- - 6
80948-11400	85- - 1
80948-11401	85- - 1
	297- - 1
80949-10601	88- - 1
80949-11400	85- - 1
80949-11401	85- - 1
	297- - 1
80970-10600	75- - 5
	286- - 5
80971-10600	75- - 5
	286- - 5
80972-10600	75- - 5
	286- - 5
80995-10600	84- - 5
	296- - 4
	297- - 1
80999-11100	85- - 1
	88- - 1
	93- - 5
	292- - 4
	297- - 1

Printed in Japan

PART NO.	PAGE
	300- - 1
	304- - 6
82100-10630	87- - 1
82100-10631	87- - 1
82100-10632	299- - 1
82100-10930	87- - 1
82100-10931	299- - 1
82100-11030	87- - 1
82100-11031	299- - 1
82101-10630	87- - 1
82101-10631	87- - 1
82101-10632	299- - 1
82101-10930	87- - 1
82101-11030	87- - 1
82101-11031	299- - 1
82210-10901	87- - 1
	299- - 1
82211-10901	87- - 1
	299- - 1
82212-11400	87- - 1
	299- - 1
82212-18500	299- - 1
82212-19600	299- - 1
82213-11400	87- - 1
	299- - 1
82213-18500	299- - 2
82213-19600	299- - 1
82214-18500	299- - 2
82214-19600	299- - 2
82215-18500	299- - 2
82215-19600	299- - 2
82216-18500	299- - 2
82216-19600	299- - 2
82217-18500	299- - 2
82217-19600	299- - 2
82220-10600	87- - 2
	299- - 3
82220-10900	87- - 2
	299- - 3
82221-10600	87- - 3
	299- - 3
82221-10900	87- - 3
	299- - 3
82241-10600	87- - 3
82241-10601	87- - 3
	299- - 3
82241-10900	87- - 3
	299- - 3
82241-10901	299- - 3
82255-10600	87- - 3
82255-10601	87- - 3
82255-10800	87- - 3

rinted in Japan

PART NO.	PAGE
82255-10801	87- - 3
82255-10802	87- - 3
	299- - 3
82255-10803	87- - 3
	299- - 3
82255-10900	87- - 3
82255-11000	87- - 4
	299- - 3
82255-11001	87- - 4
	299- - 3
82302-10600	87- - 4
	299- - 4
82303-10600	87- - 4
	299- - 4
82308-10600	87- - 4
82308-10800	87- - 4
	299- - 4
82308-10801	87- - 4
	299- - 4
82308-10900	87- - 4
82308-11000	87- - 4
	299- - 4
82308-11001	87- - 4
	299- - 4
82312-10600	87- - 4
	299- - 4
82320-10600	87- - 4
82320-10602	299- - 4
82335-10600	87- - 5
	299- - 4
82335-16500	296- - 4
	299- - 4
82336-10600	87- - 5
	299- - 4
82337-10600	87- - 5
82337-16500	299- - 4
82400-10600	87- - 2
82400-10601	87- - 2
82400-10602	299- - 2
82401-10602	299- - 2
82402-10600	87- - 2
82402-10601	87- - 2
82402-10602	299- - 2
82403-10600	87- - 2
82403-10601	87- - 2
82403-10602	299- - 2
82410-10600	87- - 5
82410-10601	87- - 5
	299- - 4
82410-10602	87- - 5
82500-10600	89- - 1
	301- - 1

Printed in Japan

PART NO.	PAGE
82501-10600	89- - 1
	301- - 1
82502-10600	89- - 1
	301- - 1
82503-10600	89- - 1
	301- - 1
82504-10600	89- - 1
	301- - 1
82505-10600	89- - 1
	301- - 1
82605-10601	89- - 2
	301- - 2
82606-10601	89- - 2
	301- - 2
82700-10600	89- - 2
	301- - 3
82700-18400	301- - 3
82701-10600	89- - 2
	301- - 3
82701-18400	301- - 3
82900-10600	88- - 1
82900-10601	88- - 2
82900-10602	88- - 2
82900-10603	88- - 1
82900-10604	88- - 2
82900-10605	88- - 2
82900-10900	88- - 1
82900-10901	88- - 2
82900-10902	88- - 3
82900-10903	88- - 3
82900-10904	88- - 1
82900-10905	88- - 2
82900-10906	88- - 3
82900-10907	88- - 3
82900-11600	88- - 2
82900-11601	88- - 2
82900-13204	300- - 2
82900-13205	300- - 2
82900-13206	300- - 2
82900-13207	300- - 2
82900-13604	300- - 1
	300- - 2
82900-13605	300- - 1
	300- - 3
82900-13606	300- - 1
82900-13809	300- - 3
82900-13813	300- - 2
82900-13814	300- - 2
82900-13815	300- - 2
82900-13816	300- - 2
82900-13901	300- - 1
82900-17001	300- - 1

Printed in Japan

PART NO.	PAGE	PART NO.	PAGE
82900-18702	300- - 4	82901-10903	88- - 3
82900-18703	300- - 4	82901-10904	88- - 2
82900-19100	300- - 3	82901-10905	88- - 3
82900-19101	300- - 4	82901-10906	88- - 3
82900-19102	300- - 4	82901-10907	88- - 3
82900-19103	300- - 4	82901-11600	88- - 2
82900-19104	300- - 3	82901-11601	88- - 2
82900-19105	300- - 3	82901-13204	300- - 2
82900-19106	300- - 3	82901-13205	300- - 2
82900-19107	300- - 3	82901-13206	300- - 2
82900-24000	300- - 3	82901-13207	300- - 2
82900-24001	300- - 3	82901-13604	300- - 1
82900-24002	300- - 3		300- - 3
82900-24003	300- - 3	82901-13605	300- - 1
82900-24100	300- - 4		300- - 3
82900-24101	300- - 4	82901-13606	300- - 1
82900-24102	300- - 4	82901-13809	300- - 3
82900-24103	300- - 4	82901-13813	300- - 2
82901-10600	88- - 1	82901-13814	300- - 2
82901-10601	88- - 2	82901-13815	300- - 2
82901-10602	88- - 2	82901-13816	300- - 2
82901-10604	88- - 2	82901-13901	300- - 1
82901-10605	88- - 2	82901-17001	300- - 1
82901-10900	88- - 1	82901-18702	300- - 6
82901-10901	88- - 2	82901-18703	300- - 5
82901-10902	88- - 3	82901-19100	300- - 5

Printed in Japan

PART NO.	PAGE	PART NO.	PAGE
82901-19101	300- - 5		299- - 5
82901-19102	300- - 5	82976-10600	87- - 5
82901-19103	300- - 5		299- - 5
82901-19104	300- - 5	84300-10630	91- - 1
82901-19105	300- - 5		95- - 7
82901-19106	300- - 5	84300-16530	302- - 4
82901-19107	300- - 5		306- -10
82901-24000	300- - 4	84300-18430	302- - 4
82901-24001	300- - 4		306- -10
82901-24002	300- - 4	84350-10600	91- - 2
82901-24003	300- - 4		302- - 6
82901-24100	300- - 5	84350-18400	302- - 6
82901-24101	300- - 5	84356-10600	91- - 2
82901-24102	300- - 5		302- - 6
82901-24103	300- - 5	84357-10600	91- - 2
82948-10601	88- - 1		302- - 6
	300- - 1	84360-10601	91- - 3
82949-10600	88- - 1	84360-11400	98- - 1
82949-10601	300- - 1		98- - 2
82963-10600	88- - 3		302- - 6
	300- - 6		310- - 1
82970-10600	75- - 5		310- - 2
	286- - 5	84420-10600	91- - 1
82971-10600	75- - 5	84420-10601	91- - 1
	286- - 5		302- - 4
82975-10600	87- - 5	84420-18400	302- - 4

Printed in Japan

PART NO.	PAGE
84430-10600	91- - 1
	302- - 4
84430-18400	302- - 4
84451-10600	91- - 3
	92- - 2
	302- - 6
	303- - 2
84451-18400	302- - 6
	303- - 2
84460-10600	91- - 1
	98- - 1
	98- - 2
	302- - 4
	310- - 1
	310- - 1
84460-18400	302- - 4
84464-01301	30- - 1
	231- - 1
84510-10602	91- - 1
84510-18400	302- - 5
84511-10602	91- - 1
84511-18400	302- - 5
84512-10602	91- - 1
	302- - 5
84513-10602	91- - 1
	302- - 5
84532-10601	91- - 1
84532-10652	91- - 2
84532-10653	91- - 2
	302- - 5
84532-18451	302- - 5
84533-10601	91- - 2
84533-10602	91- - 2
84533-10603	91- - 2
	302- - 5
84533-18401	302- - 5
84535-10601	91- - 2
	302- - 5
84537-10600	91- - 2
	302- - 5
84537-24000	302- - 5
84541-18400	302- - 5
84806-10600	91- - 3
84806-10601	91- - 3
	302- - 6
84806-18400	302- - 6
84806-24000	302- - 6
84808-10600	91- - 3
	302- - 7
84811-10800	91- - 3
84811-11401	91- - 3
	92- - 2

Printed in Japan

PART NO.	PAGE
84811-15800	302- - 7
84811-16600	303- - 2
84811-17000	302- - 7
84811-17001	302- - 7
84811-18900	302- - 7
84811-19101	302- - 7
	302- - 7
84811-19400	302- - 7
84812-10900	92- - 2
	303- - 2
84812-10901	303- - 3
84812-16700	302- - 7
84813-11700	91- - 3
84901-11400	91- - 4
	302- - 8
84901-18500	302- - 8
84904-11400	91- - 4
84904-13600	91- - 4
	91- - 4
	302- - 8
84904-16600	302- - 8
84904-17100	302- - 8
84905-11400	91- - 4
84920-11400	91- - 4
	302- - 8
84921-11400	91- - 4
	302- - 8
85000-10650	90- - 1
85000-13200	90- - 1
	302- - 1
85000-13400	90- - 1
	302- - 1
85000-18400	302- - 1
85107-09400	79- - 7
	290- - 7
85221-10600	90- - 1
	302- - 2
85221-18401	302- - 2
85222-18401	302- - 2
85223-10600	90- - 1
	302- - 2
85223-18401	302- - 2
85224-18401	302- - 2
85225-10601	90- - 2
	302- - 3
85226-10600	90- - 2
	302- - 3
85227-10600	286- - 2
	302- - 2
85658-10600	90- - 1
85658-10900	90- - 1
	302- - 2

Printed in Japan

PART NO.	PAGE	PART NO.	PAGE
85658-13200	90- - 1	86000-13300	97- - 1
	302- - 1	86000-13301	97- - 1
85658-18402	302- - 1	86000-13302	97- - 1
85659-18402	302- - 2	86000-13303	97- - 1
86000-10800	97- - 1	86000-13304	97- - 1
86000-10801	97- - 1	86000-13305	97- - 1
86000-10802	97- - 1	86000-13306	97- - 1
86000-10803	97- - 1	86000-13307	97- - 2
86000-10804	97- - 1	86000-13500	97- - 3
86000-10805	97- - 1	86000-13501	97- - 3
86000-10806	97- - 1	86000-13800	97- - 2
86000-10807	97- - 1	86000-13801	97- - 2
86000-11000	97- - 3	86000-13802	97- - 2
86000-11001	97- - 3		97- - 2
86000-11002	97- - 3	86000-13804	97- - 2
86000-11003	97- - 3	86000-13805	97- - 2
86000-11004	97- - 3	86000-13806	97- - 3
86000-11005	97- - 3	86000-13807	97- - 3
86000-11007	97- - 3	86000-16910	307- - 1
86000-11600	97- - 2	86000-16911	307- - 1
86000-11602	97- - 2	86000-16912	307- - 1
86000-11603	97- - 2	86000-16913	307- - 1
86000-11604	97- - 2	86000-16914	307- - 1
86000-11605	97- - 2	86000-16915	307- - 2
86000-11606	97- - 2	86000-16916	307- - 2
86000-11607	97- - 3	86000-16917	307- - 2

Printed in Japan

PART NO.	PAGE
86000-16918	307- - 1
86000-16919	307- - 1
86000-16920	307- - 1
86000-16921	307- - 1
86000-16922	307- - 1
86000-16923	307- - 2
86000-16924	307- - 2
86000-16925	307- - 2
86000-17510	307- - 2
86000-17511	307- - 2
86000-17512	307- - 2
86000-17513	307- - 2
86000-17515	307- - 2
86000-17516	307- - 2
86000-17517	307- - 2
86000-17518	307- - 2
86000-19100	307- - 1
86000-19101	307- - 1
86000-19102	307- - 1
86000-19103	307- - 1
86000-19120	307- - 1
86000-19121	307- - 2
86000-19122	307- - 2
86000-19123	307- - 2
86000-19810	307- - 2
86000-19811	307- - 3
86000-19812	307- - 3
86000-19813	307- - 3
86000-19820	307- - 3
86000-19821	307- - 3
86305-19810	307- - 3
86305-19811	307- - 3
86305-19812	307- - 3
86305-19813	307- - 3
86305-19814	307- - 4
86305-19815	307- - 4
86350-00100	82- - 6
	83- - 3
	94- - 2
	295- -13
	305- - 2
86350-10600	81- - 8
	292- -10
86501-10600	307- - 4
86501-10800	97- - 3
	307- - 4
86502-10600	307- - 4
86502-10800	97- - 3
	307- - 4
86503-16900	307- - 4
86520-10800	97- - 3
	307- - 4

Printed in Japan

PART NO.	PAGE
86522-10600	97- - 4
86522-16500	307- - 4
86527-10600	97- - 4
86532-10600	97- - 3
86532-16500	307- - 4
86533-16500	307- - 4
86559-65000	307- - 5
86605-19810	307- - 3
86605-19811	307- - 3
86605-19812	307- - 3
86605-19813	307- - 3
86605-19814	307- - 3
86605-19815	307- - 3
86800-11600	97- - 4
86800-11601	97- - 4
	307- - 5
	307- -13
86800-13801	307- - 5
	307- -14
86800-13802	307- - 5
	307- -14
86800-15801	307- - 5
	307- -14
86800-16502	307- - 5
	307- -13
86800-16503	307- - 5
	307- -13
86800-19100	307- -14
86800-19101	307- -14
86800-19102	307- -14
86800-19103	307- -14
86800-19104	307- -14
86800-24000	307- -14
86800-24001	307- -14
86800-24002	307- -14
86800-24003	307- -14
86800-24004	307- -14
86905-11600	97- - 3
87000-11501	97- - 9
87000-11600	97- - 7
87000-11601	97- - 7
87000-11602	97- - 7
87000-11603	97- - 7
87000-11800	97- - 6
87000-11802	97- - 6
87000-11803	97- - 7
87000-11804	97- - 9
87000-11805	97- - 9
87000-11806	97- - 9
87000-13800	97- - 7
87000-13801	97- - 7
87000-13802	97- - 7

Printed in Japan

PART NO.	PAGE	PART NO.	PAGE
87000-13803	97- - 7		307- - 7
87000-14000	97- - 6	87000-19102	307- - 6
87000-14001	97- - 6		307- - 7
87000-14002	97- - 6	87000-19103	307- - 7
87000-14003	97- - 7		307- - 7
87000-15800	307- - 7	87000-19104	307- - 6
87000-15806	307- - 7	87000-19105	307- - 6
87000-16600	307- - 5	87000-19106	307- - 6
87000-16601	307- - 5	87000-19107	307- - 7
87000-16602	307- - 5	87000-24100	307- - 5
87000-16603	307- - 6		307- - 5
87000-16910	307- - 6	87000-24102	307- - 5
	307- - 7	87000-24103	307- - 6
87000-16911	307- - 6	87050-11501	97- -10
	307- - 7	87050-11600	97- - 8
87000-16912	307- - 6	87050-11601	97- - 8
	307- - 7	87050-11602	97- - 8
87000-16913	307- - 6	87050-11603	97- - 8
	307- - 7	87050-11800	97- - 8
87000-17000	307- - 7	87050-11801	97- - 8
87000-17001	307- - 8	87050-11802	97- - 8
87000-18700	307- - 8	87050-11803	97- - 8
87000-18701	307- - 7	87050-11804	97- -10
87000-19100	307- - 6	87050-11805	97- -10
	307- - 7	87050-11806	97- -10
87000-19101	307- - 6	87050-13800	97- - 8

Printed in Japan

PART NO.	PAGE
87050-13801	97- - 8
87050-13802	97- - 8
87050-13803	97- - 9
87050-14000	97- - 8
87050-14001	97- - 8
87050-14002	97- - 8
87050-14003	97- - 8
87050-15800	307- -10
87050-15806	307- -10
87050-16600	307-U- 1
87050-16601	307-U- 1
87050-16602	307-U- 1
87050-16603	307-U- 1
87050-16910	307-U- 2
	307-U- 3
87050-16911	307-U- 2
	307-U- 3
87050-16912	307-U- 2
	307-U- 3
87050-16913	307-U- 2
	307-U- 3
87050-17000	307- -10
87050-17001	307- -10
87050-18700	307- -11
87050-18701	307- -10
87050-19100	307-U- 2
	307-U- 3
87050-19101	307-U- 2
	307-U- 3
87050-19102	307-U- 2
	307-U- 3
87050-19103	307-U- 2
	307-U- 3
87050-19104	307-U- 2
87050-19105	307-U- 2
87050-19106	307-U- 2
87050-19107	307-U- 2
87050-24100	307-U- 1
87050-24101	307-U- 1
87050-24102	307-U- 1
87050-24103	307-U- 2
87100-15806	307- - 7
87100-17001	307- - 8
87150-15806	307- -10
87150-17001	307- -11
87300-11501	97- - 9
87300-11804	97- - 9
87300-11805	97- - 9
87300-11806	97- - 9
87305-15800	307- - 8
87305-17000	307- - 8
87320-18700	307- - 8

Printed in Japan

PART NO.	PAGE
87320-18701	307- - 8
87320-19104	307- - 8
87320-19105	307- - 8
87320-19106	307- - 8
87320-19107	307- - 8
87350-11501	97- -10
87350-11804	97- -10
87350-11805	97- -10
87350-11806	97- -10
87355-15800	307- -11
87355-17000	307- -11
87370-18700	307- -12
87370-18701	307- -11
87370-19104	307- -11
87370-19105	307- -11
87370-19106	307- -11
87370-19107	307- -11
87401-21100	307- - 9
87402-21100	307- - 9
87451-21100	307- -13
87452-21100	307- -13
87501-11800	97- - 7
	307- -10
	307- -13
87501-19104	307- -10
87502-11800	97- - 7
	307- -10
87502-19104	307- -10
87503-11800	97- - 9
	307- -13
87504-11800	97- - 9
87532-11800	97- - 7
	97- - 9
	307- -10
	307- -13
87532-21700	307- -13
87551-19104	307- -13
87552-19104	307- -13
87600-11501	97- -10
87600-11804	97- - 9
87600-11805	97- - 9
87600-11806	97- - 9
87605-15800	307- - 9
87605-17000	307- - 9
87620-18700	307- - 9
	307- -12
87620-18701	307- - 9
	307- -12
87620-19104	307- - 9
	307- -12
87620-19105	307- - 9
	307- -12

Printed in Japan

PART NO.	PAGE
87620-19106	307- - 9
	307- -12
87620-19107	307- - 9
	307- -12
87650-11501	97- -10
87650-11804	97- -10
87650-11805	97- -10
87650-11806	97- -10
87655-15800	307- -12
87655-17000	307- -12
88300-10600	97- - 5
88300-10601	97- - 5
88300-10602	97- - 5
88300-11000	96- - 1
88300-11001	96- - 1
88300-11002	96- - 1
88300-11003	96- - 1
88300-11004	96- - 1
88300-11005	96- - 1
88300-11006	96- - 1
88300-11007	96- - 1
88300-11400	97- - 4
88300-11401	97- - 4
88300-11402	97- - 4
88300-11403	97- - 5
88300-11600	97- - 5
88300-13206	97- - 5
88300-13207	97- - 5
88300-13208	97- - 5
88300-13500	96- - 1
	309- - 1
88300-13501	96- - 1
	309- - 1
88300-13502	96- - 1
	309- - 1
88300-13503	96- - 1
	309- - 1
88300-13608	97- - 4
	308- - 2
88300-13609	97- - 4
	308- - 2
88300-13610	97- - 4
	308- - 2
88300-13611	97- - 5
	308- - 2
88300-15801	308- - 2
88300-16500	308- - 1
88300-16501	308- - 1
88300-16502	308- - 1
88300-16503	308- - 1
88300-16504	308- - 1
88300-16910	308- - 1

Printed in Japan

PART NO.	PAGE	PART NO.	PAGE
88300-17001	308- - 2	88300-24103	308- - 3
88300-18400	308- - 1	88305-15805	308- - 5
88300-18401	308- - 1	88305-17000	308- - 5
88300-18402	308- - 1	88305-19810	309- - 2
88300-18403	308- - 1	88305-19811	309- - 2
88300-18500	308- - 2	88305-19812	309- - 2
88300-18501	308- - 2	88305-19813	309- - 2
88300-18502	308- - 2	88305-19814	309- - 3
88300-18503	308- - 2	88305-19815	309- - 3
88300-18800	308- - 3	88600-10600	97- - 6
88300-18801	308- - 3	88600-10601	97- - 6
88300-18802	308- - 2	88600-10602	97- - 6
88300-19100	308- - 2	88600-11000	96- - 1
88300-19810	309- - 1	88600-11001	96- - 1
88300-19811	309- - 1	88600-11002	96- - 2
88300-19812	309- - 1	88600-11003	96- - 2
88300-19813	309- - 1	88600-11400	97- - 5
88300-19814	309- - 1	88600-11401	97- - 5
88300-19815	309- - 1	88600-11402	97- - 5
88300-24000	308- - 1	88600-11403	97- - 6
88300-24001	308- - 1	88600-11600	97- - 6
88300-24002	308- - 1	88600-13200	97- - 6
88300-24003	308- - 1	88600-13201	97- - 6
88300-24100	308- - 2	88600-13202	97- - 6
88300-24101	308- - 2	88600-13500	96- - 1
88300-24102	308- - 2		309- - 1

Printed in Japan

PART NO.	PAGE	PART NO.	PAGE
88600-13501	96- - 2	88600-16603	308- - 4
	309- - 1	88600-16910	308- - 3
88600-13502	96- - 2	88600-17000	308- - 4
	309- - 1	88600-17001	308- - 4
88600-13503	96- - 2	88600-18400	308- - 3
	309- - 2	88600-19810	309- - 1
88600-13600	97- - 5	88600-19811	309- - 1
	308- - 4	88600-19812	309- - 2
88600-13601	97- - 5	88600-19813	309- - 2
	308- - 4	88600-19814	309- - 2
88600-13602	97- - 5	88600-19815	309- - 2
	308- - 4	88600-19820	309- - 2
88600-13603	97- - 6	88600-19821	309- - 2
	308- - 4	88600-19822	309- - 2
88600-13800	97- - 6	88600-19823	309- - 2
88600-15805	308- - 4	88600-19824	309- - 2
88600-15808	308- - 4	88600-19825	309- - 2
88600-16500	308- - 3	88600-24000	308- - 3
88600-16501	308- - 3	88600-24001	308- - 3
88600-16502	308- - 3	88600-24002	308- - 3
88600-16503	308- - 3	88600-24003	308- - 3
88600-16504	308- - 3	88600-24100	308- - 4
88600-16505	308- - 3	88600-24101	308- - 4
88600-16600	308- - 4	88600-24102	308- - 4
88600-16601	308- - 4	88600-24103	308- - 5
88600-16602	308- - 4	88605-15805	308- - 5

Printed in Japan

PART NO.	PAGE
88605-17000	308- - 5
88605-19810	309- - 3
88605-19811	309- - 3
88605-19812	309- - 3
88605-19813	309- - 3
88605-19814	309- - 3
88605-19815	309- - 3
88800-24000	308- - 5
88800-24001	308- - 5
88800-24002	308- - 5
88800-24003	308- - 5
88800-24004	308- - 6
88800-24005	308- - 6
88800-24006	308- - 6
88800-24007	308- - 6
88800-24008	308- - 6
88800-24009	308- - 6
88801-10900	96- - 3
88801-10901	96- - 3
	309- - 4
88803-10900	96- - 3
	309- - 4
88810-10950	96- - 3
	309- - 4
	309- - 4
88810-17450	309- - 4
88810-19850	309- - 4
88813-17450	309- - 4
88813-19850	309- - 4
88819-10900	96- - 3
88819-10901	96- - 3
	309- - 5
88820-10900	96- - 2
88820-10901	96- - 2
	309- - 3
88823-10900	96- - 2
88823-10901	96- - 2
	309- - 3
88824-10900	96- - 2
88824-10901	96- - 2
	309- - 3
88825-10900	96- - 2
	309- - 3
88826-10900	96- - 2
	309- - 3
88827-10900	96- - 2
	309- - 3

Printed in Japan

PART NO.	PAGE
90000	
90101-10930	92- - 1
	95- - 9
90101-17490	303- - 1
90101-19690	303- - 1
90304-10900	92- - 1
90304-11000	92- - 1
	303- - 1
90304-11001	92- - 1
	303- - 1
90307-10900	92- - 1
	303- - 1
90307-10901	303- - 1
90401-10900	92- - 1
	303- - 1
90402-10900	92- - 1
	303- - 1
90408-10900	92- - 2
90408-10902	92- - 2
	303- - 2
90411-10900	93- - 3
	304- - 4
90412-10900	93- - 3
	304- - 4
90418-10900	92- - 2
	303- - 2
90420-10900	92- - 2
	303- - 3
90421-10900	92- - 2
	303- - 3
90430-10900	93- - 3
	304- - 4
90431-10900	93- - 3
	304- - 4
90502-10900	93- - 3
	304- - 3
90622-10900	304- - 4
90623-10900	93- - 3
	304- - 4
90803-10900	93- - 3
	304- - 4
90804-10900	93- - 3
90804-10930	304- - 4
90805-10900	93- - 3
	304- - 3
90901-10900	93- - 2
	304- - 2
90901-10901	93- - 2
	304- - 2
90901-10903	93- - 2
	304- - 3

Printed in Japan

PART NO.	PAGE
90901-10906	304- - 3
90901-10907	304- - 3
90901-10908	304- - 3
90901-10909	304- - 3
90901-11001	304- - 3
90901-17500	304- - 3
90902-10900	92- - 2
	303- - 2
90902-19600	303- - 2
90903-10900	92- - 1
	303- - 1
90904-10900	92- - 1
	303- - 1
90905-10900	92- - 1
	303- - 1
90906-10900	92- - 1
	303- - 1
90907-10900	92- - 1
	303- - 1
90908-10900	92- - 1
	303- - 1
90909-10900	92- - 2
	303- - 2
90913-10900	93- - 2
	304- - 2
93438-26260	94- - 2

PART NO.	PAGE
	305- - 2
96205-10600	91- - 3
96205-10900	93- - 2
	304- - 2
96220-10900	93- - 2
	95- - 9
	304- - 2
96230-24000	286- - 4
96234-10900	93- - 2
96234-10901	304- - 2
96236-10900	93- - 2
	304- - 3
96238-10900	93- - 3
	304- - 3
96239-10900	93- - 2
	304- - 3
96240-10900	93- - 3
	304- - 3
96301-10600	75- - 3
96301-13200	75- - 3
	286- - 3
96321-10600	78- - 2
96321-10900	78- - 2
96321-10901	78- - 2
	78- - 2
96321-16500	289- - 1

Printed in Japan

PART NO.	PAGE
96321-16600	289- - 1
96321-17400	289- - 2
96321-17401	289- - 2
96321-19600	289- - 2
96400-10600	78- - 2
	289- - 2
96400-10800	78- - 2
	289- - 2
96400-11400	78- - 2
	289- - 2
96400-16500	289- - 2
96400-16600	289- - 2
96400-17000	289- - 2
96400-24100	289- - 2
	289- - 2
96401-11400	78- - 2
	289- - 2
96401-16600	289- - 2
96401-24100	289- - 2
	289- - 2
96409-10600	78- - 2
96409-10601	289- - 2
96500-10600	79- - 4
	290- - 4
96500-13200	79- - 4
	290- - 4
96501-10601	97- - 3
	307- - 4
96501-11800	97- - 7
	97- - 9
	307- -10
96501-16500	307- - 4
96501-24000	307- - 4
96511-10600	97- - 9
	307- - 4
96700-11400	81- - 2
	292- - 4
96750-11400	81- - 2
96750-13600	81- - 2
	292- - 4
96750-32201	81- - 2
	292- - 4
96800-13200	79- - 7
	290- - 7
96800-13300	79- - 7
	290- - 8
96800-16500	290- - 7
96800-17000	290- - 8
96807-10900	93- - 3
	98- - 2
	304- - 3
	310- - 2

Printed in Japan

PART NO.	PAGE
	310- - 3
	310- - 3
96901-19101	306- -11
97331-32200	75- - 4
	75- - 4
	91- - 3
	91- - 3
	286- - 4
	286- - 4
	302- - 7
99500-16500	311- - 1
99500-17000	311- - 1
99500-19101	311- - 1
99500-24000	311- - 1
99512-73000	311- - 1
99520-73000	311- - 1
99525-73000	311- - 1
99530-73000	311- - 1
99535-73000	311- - 1
99540-73000	311- - 1
99545-16500	311- - 1
99550-10600	311- - 1
99550-24000	311- - 1
99553-08300	311- - 1
99553-24000	311- - 1
99560-75000	311- - 2

PART NO.	PAGE
99565-10600	95- - 5
	306- - 8
99567-08100	306- - 8
99595-10600	311- - 2
99595-19100	311- - 2
99595-24000	311- - 2
99595-73000	311- - 2
99595-75000	311- - 2
99607-10600	91- - 4
	302- - 9
99610-10600	91- - 4
	302- - 9
99611-08400	94- - 1
	305- - 2